FIG. 1

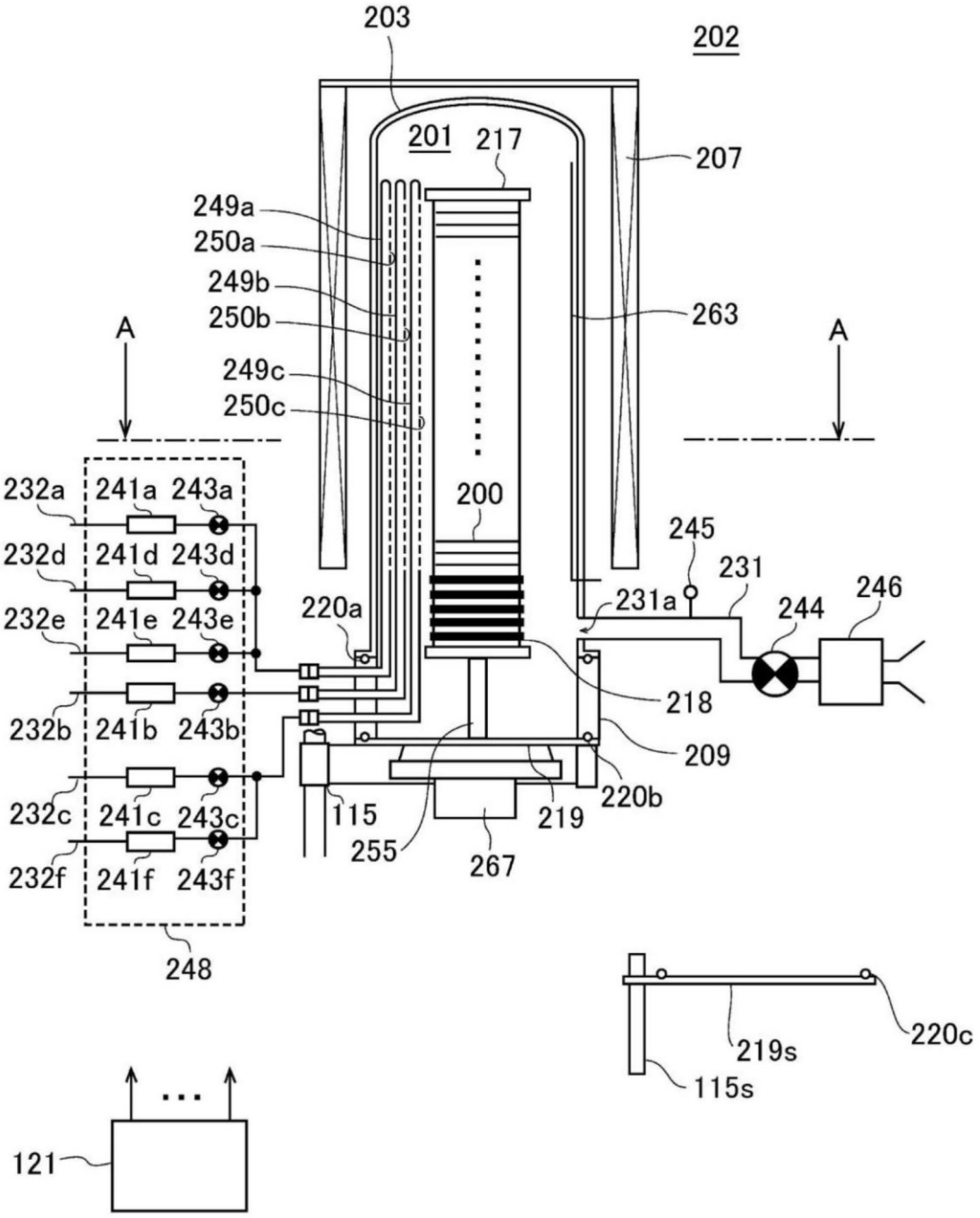
203
202
201
217
207
249a
250a
249b
250b
263
A
A
249c
250c
232a
241a
243a
200
245
231
246
232d
241d
243d
220a
231a
244
232e
241e
243e
218
232b
241b
243b
209
232c
241c
243c
115
219
220b
232f
241f
243f
255
267
248
219s
220c
115s
121

FIG. 2

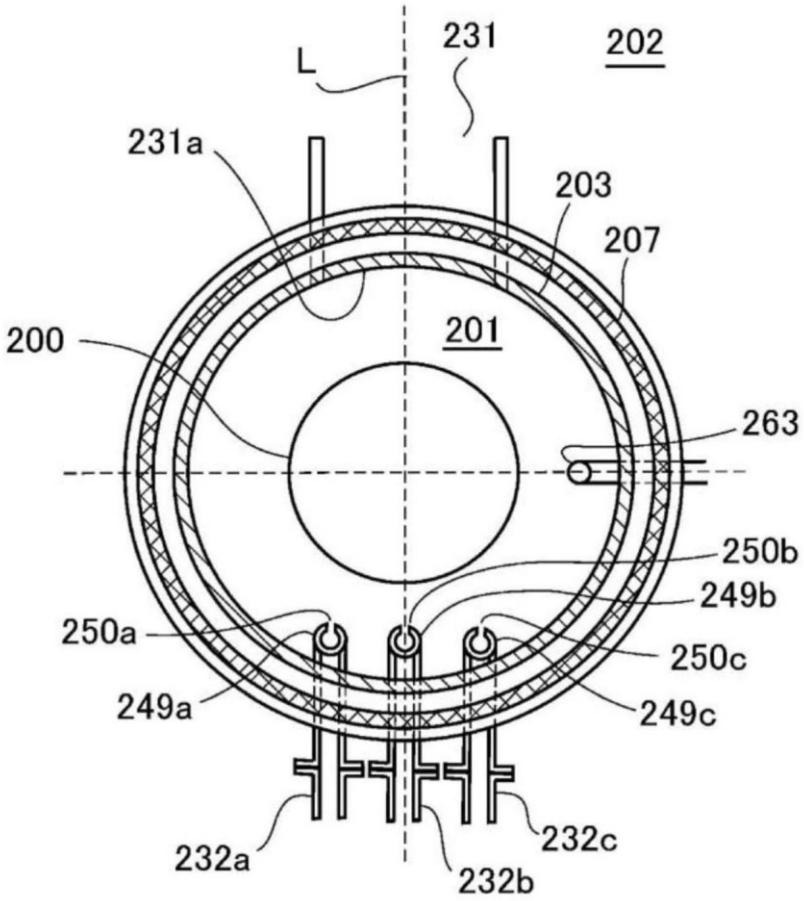
L
231
202
231a
203
207
200
201
263
250b
249b
250a
250c
249a
249c
232a
232b
232c

FIG. 3

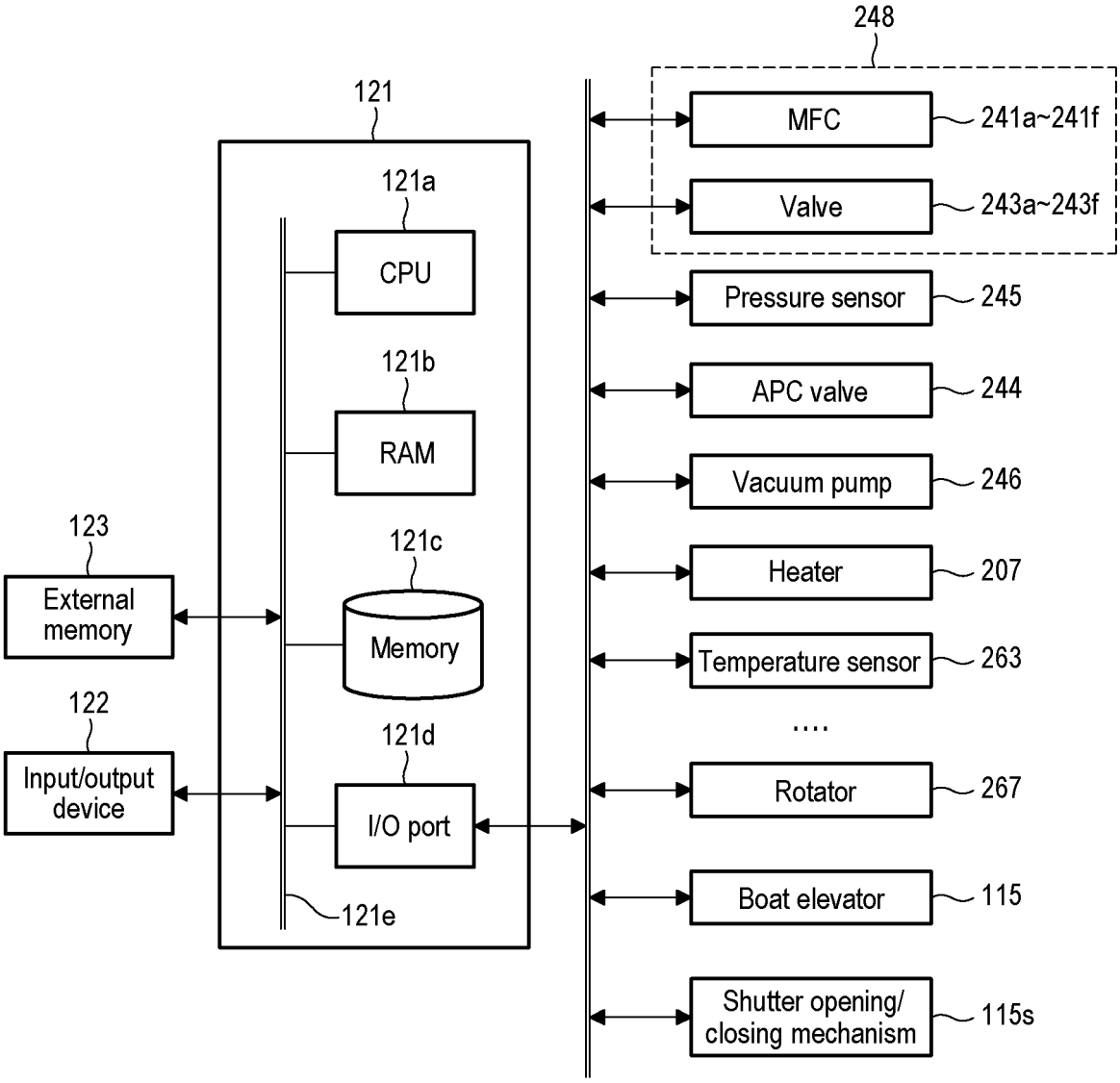
248
121
121a
CPU
121b
RAM
121c
Memory
121d
I/O port
121e
123
External memory
122
Input/output device
MFC
241a~241f
Valve
243a~243f
Pressure sensor
245
APC valve
244
Vacuum pump
246
Heater
207
Temperature sensor
263
....
Rotator
267
Boat elevator
115
Shutter opening/ closing mechanism
115s

FIG. 4

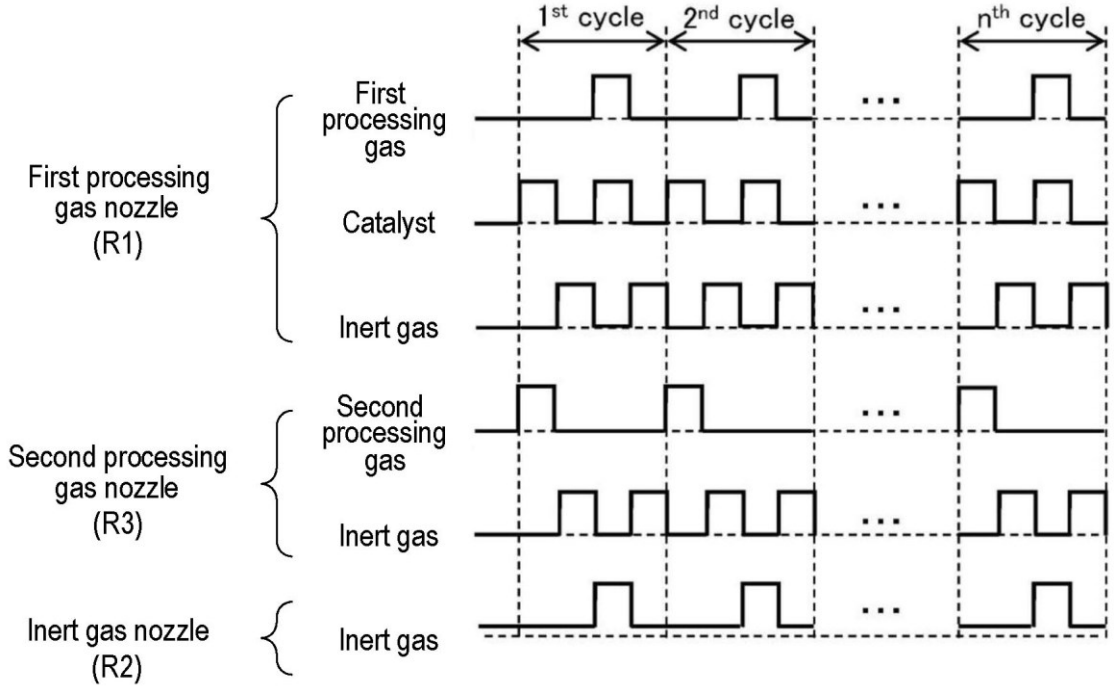
1st cycle
2nd cycle
nth cycle
First processing gas nozzle (R1)
First processing gas
Catalyst
Inert gas
Second processing gas nozzle (R3)
Second processing gas
Inert gas
Inert gas nozzle (R2)
Inert gas

FIG. 5

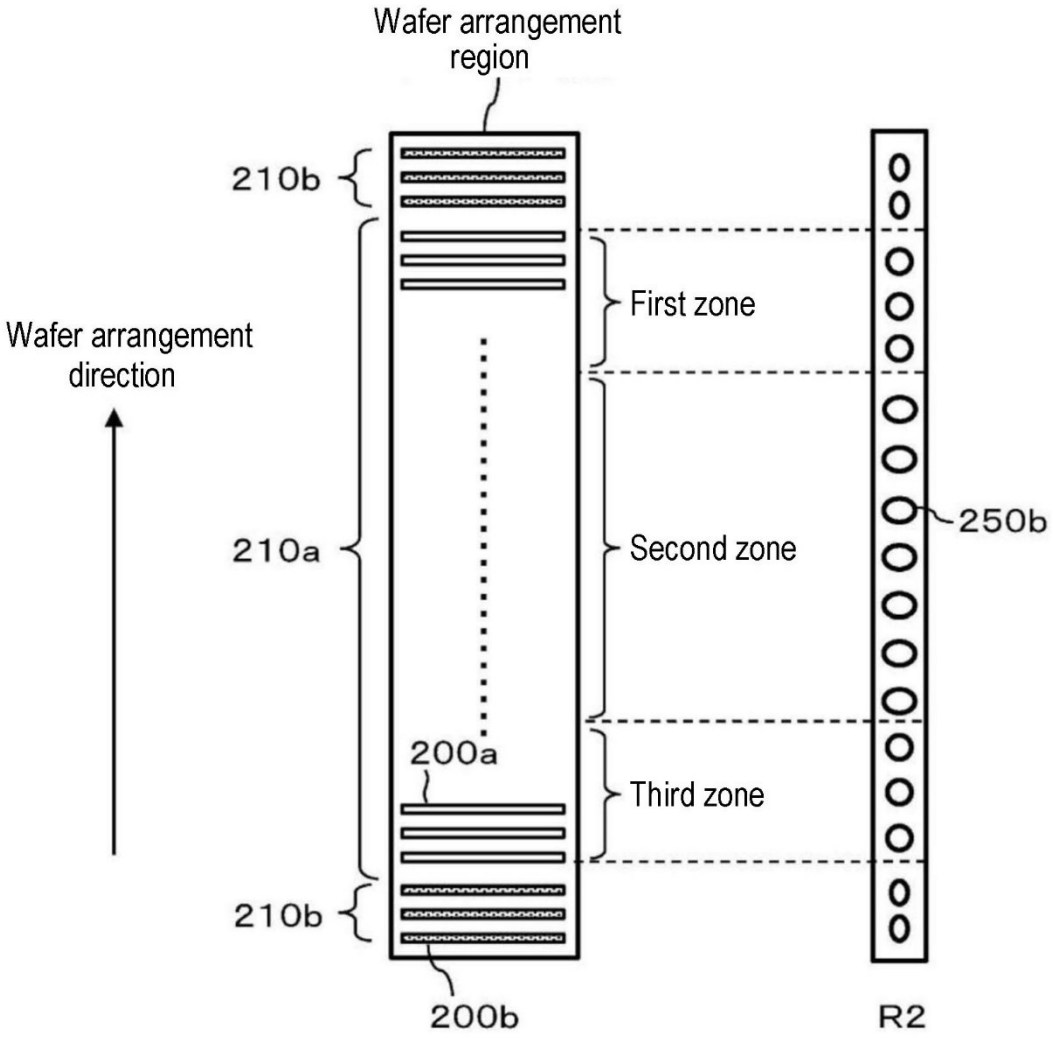
Wafer arrangement region
210b
First zone
Wafer arrangement direction
210a
Second zone
250b
200a
Third zone
210b
200b
R2

FIG. 6

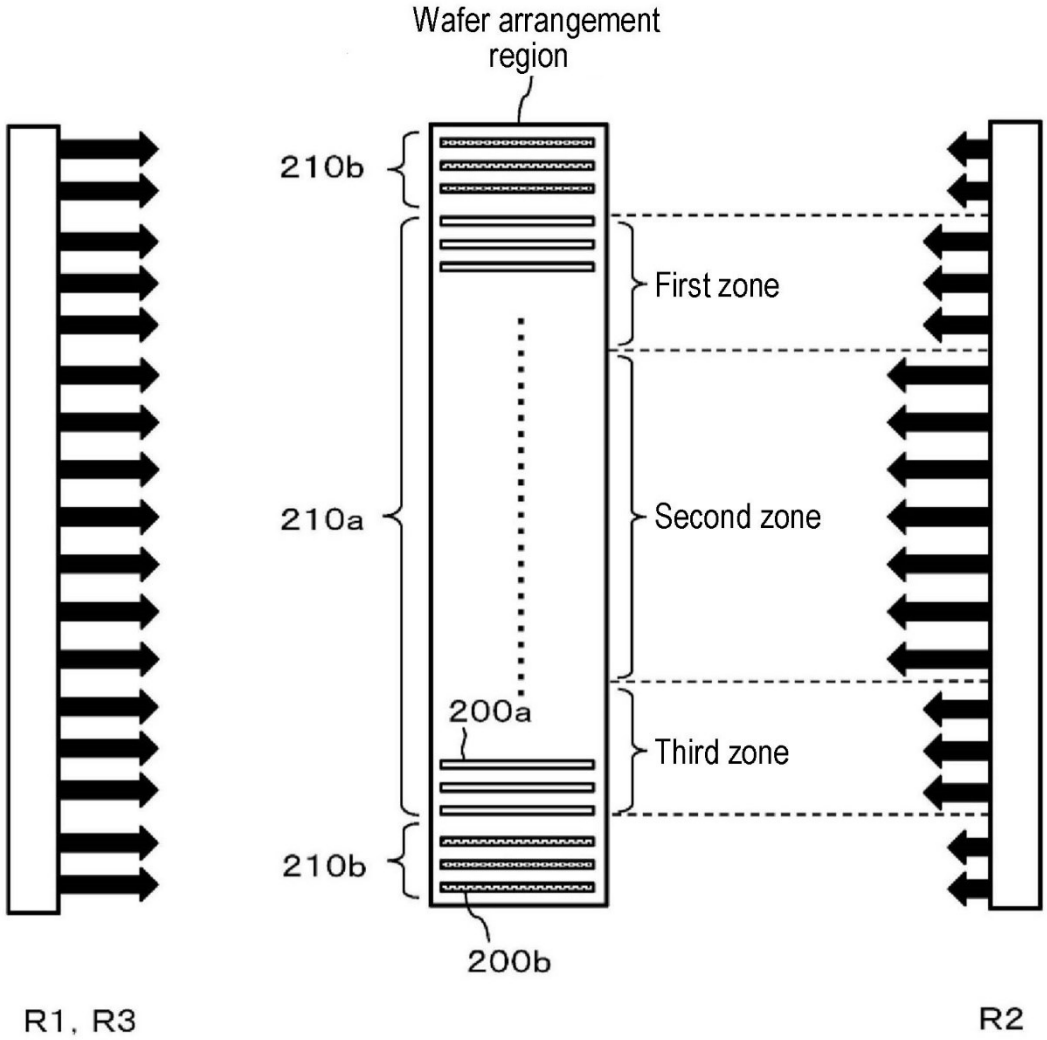
Wafer arrangement region
210b
First zone
210a
Second zone
200a
Third zone
210b
200b
R1, R3
R2

FIG. 7A

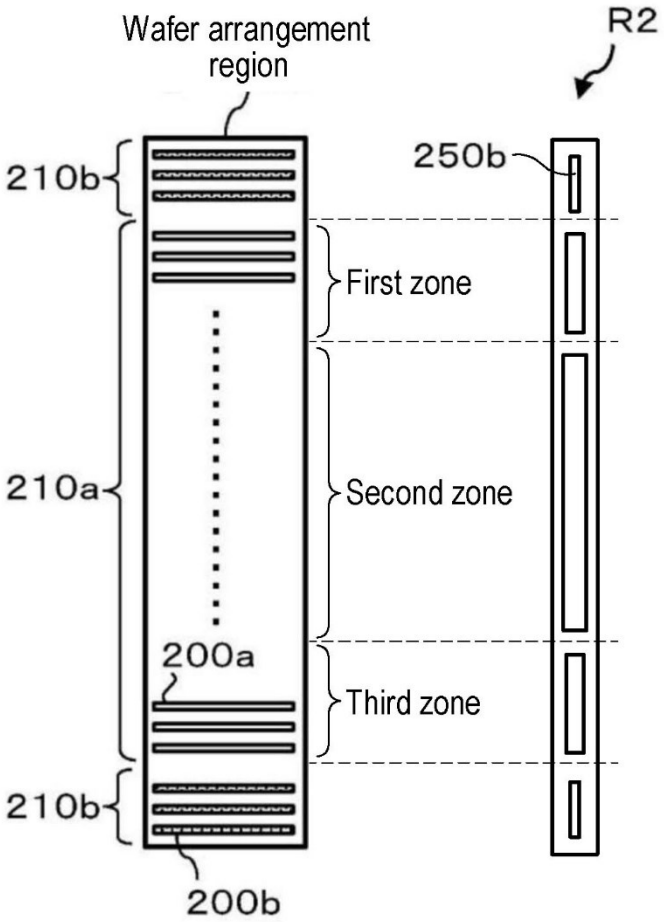
Wafer arrangement region
R2
210b
250b
First zone
210a
Second zone
200a
Third zone
210b
200b

FIG. 7B

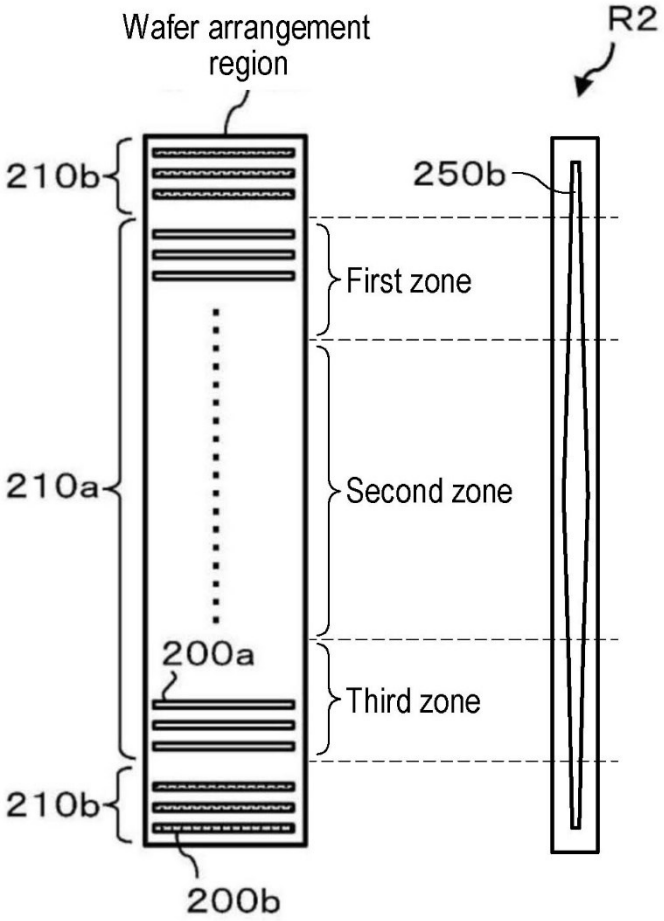
Wafer arrangement region
R2
210b
250b
First zone
210a
Second zone
200a
Third zone
210b
200b

FIG. 7C

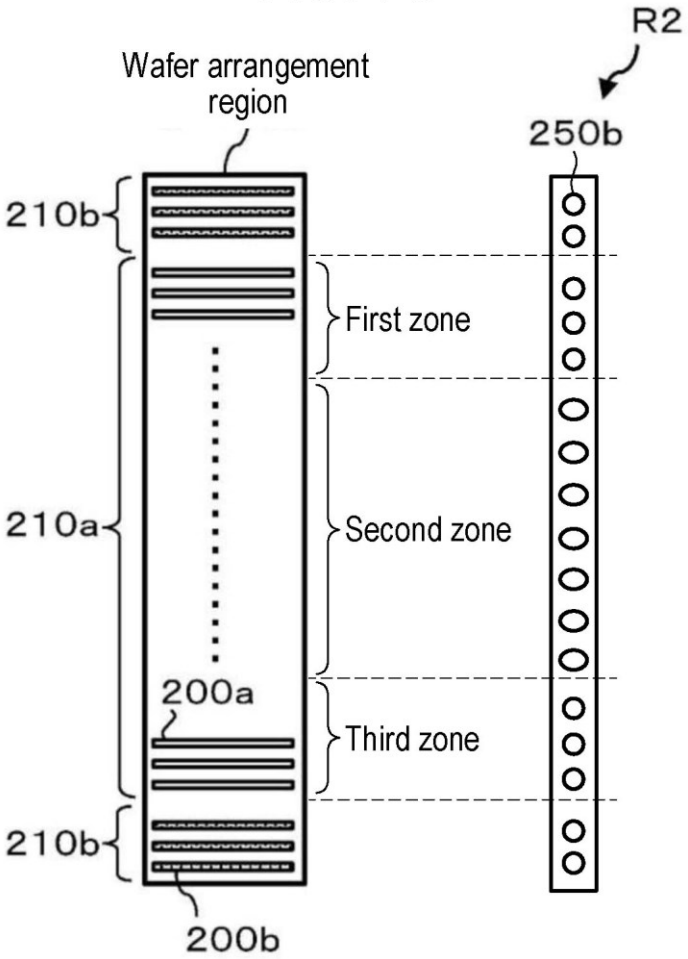
R2
Wafer arrangement region
250b
210b
First zone
210a
Second zone
200a
Third zone
210b
200b

FIG. 7D

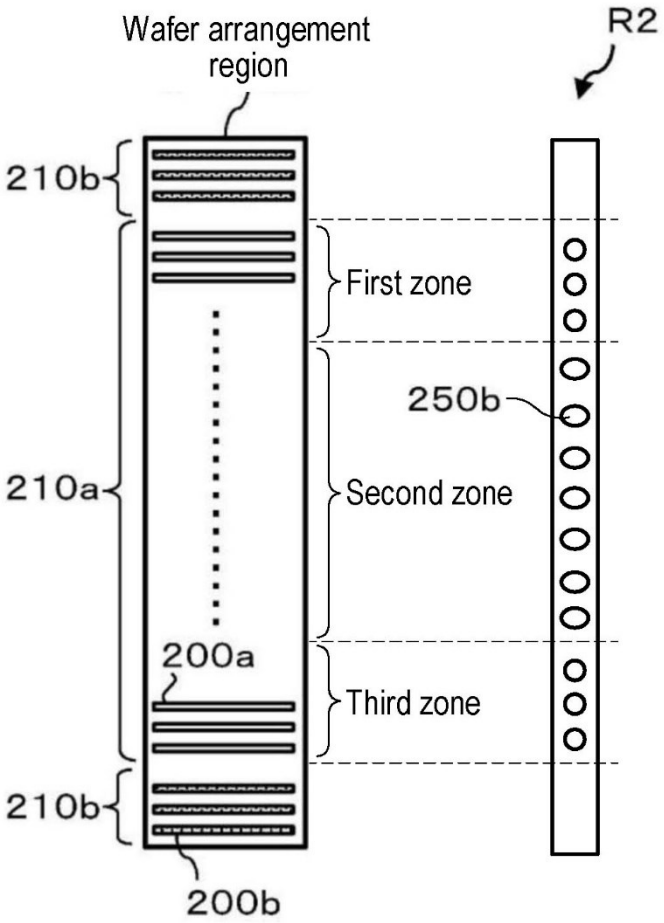
Wafer arrangement region
R2
210b
First zone
250b
210a
Second zone
200a
Third zone
210b
200b

FIG. 7E

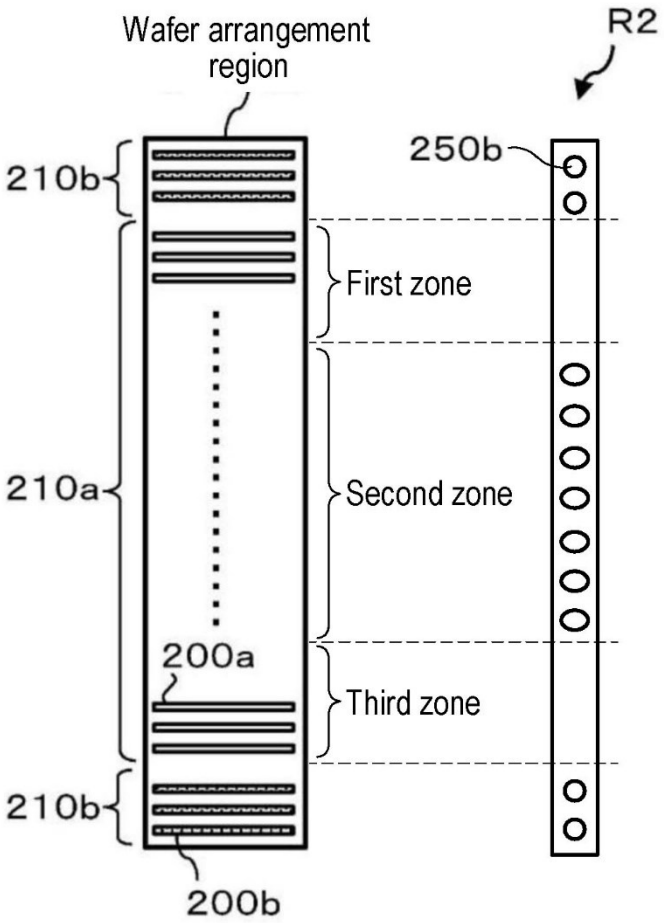
Wafer arrangement region
R2
250b
210b
First zone
210a
Second zone
200a
Third zone
210b
200b

FIG. 7F

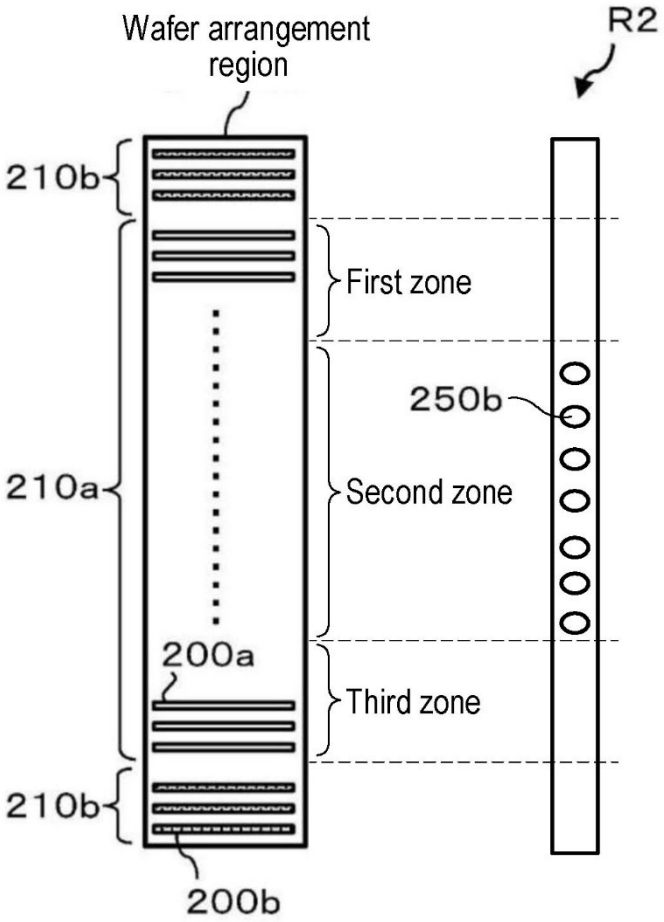
Wafer arrangement region
R2
210b
First zone
250b
210a
Second zone
200a
Third zone
210b
200b

FIG. 7G

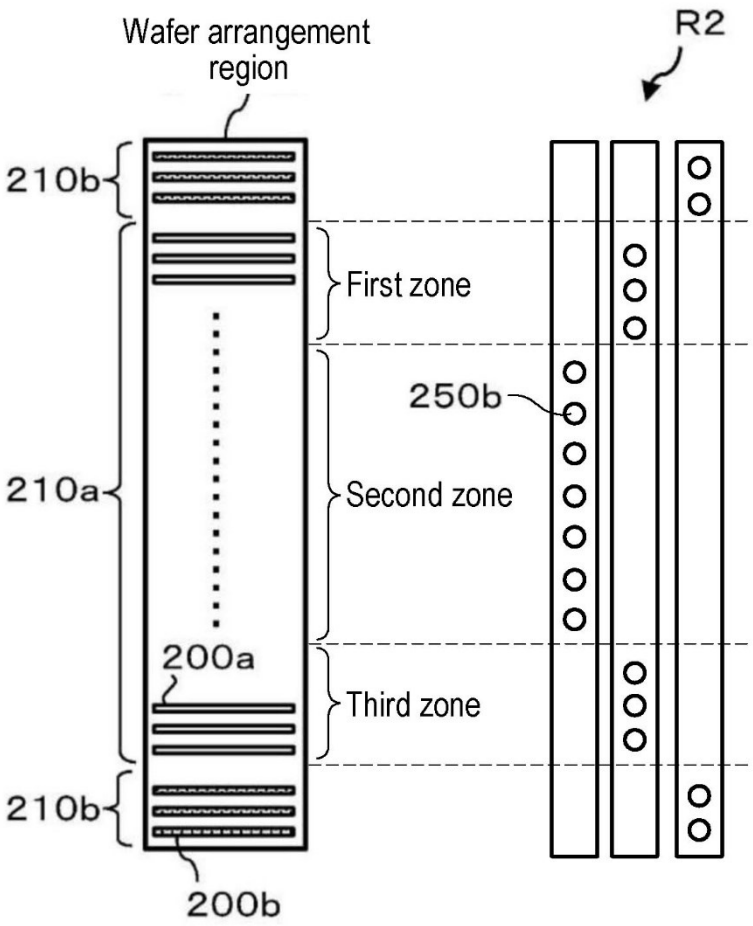
Wafer arrangement region
R2
210b
First zone
250b
210a
Second zone
200a
Third zone
210b
200b

FIG. 7H

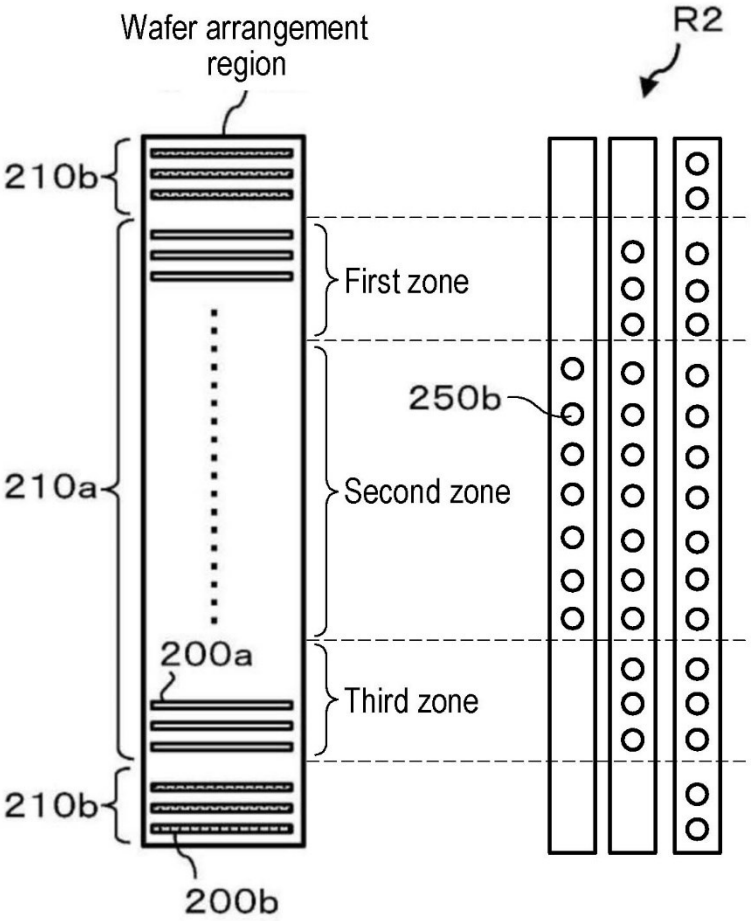
Wafer arrangement region
R2
210b
First zone
250b
210a
Second zone
200a
Third zone
210b
200b

FIG. 7I

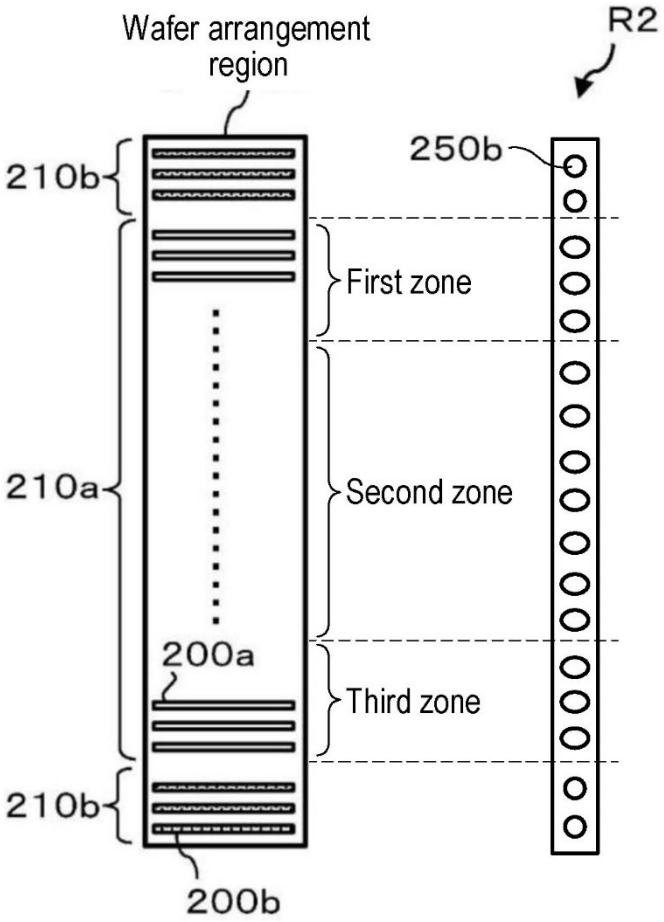
Wafer arrangement region
R2
250b
210b
First zone
210a
Second zone
200a
Third zone
210b
200b

FIG. 8A

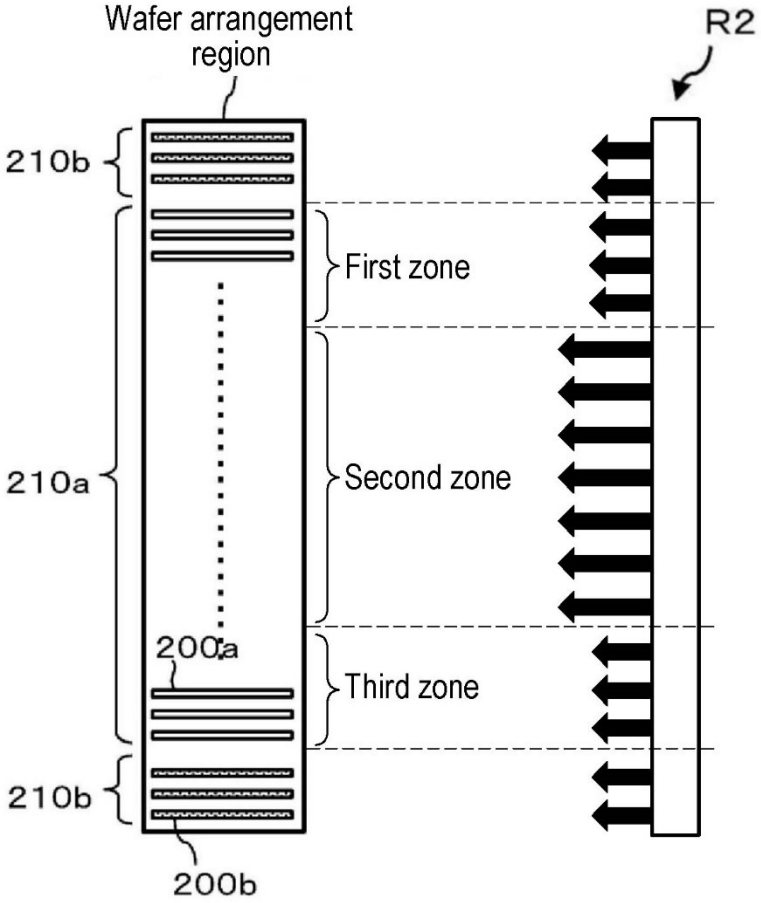
Wafer arrangement region
R2
210b
First zone
210a
Second zone
200a
Third zone
210b
200b

FIG. 8B

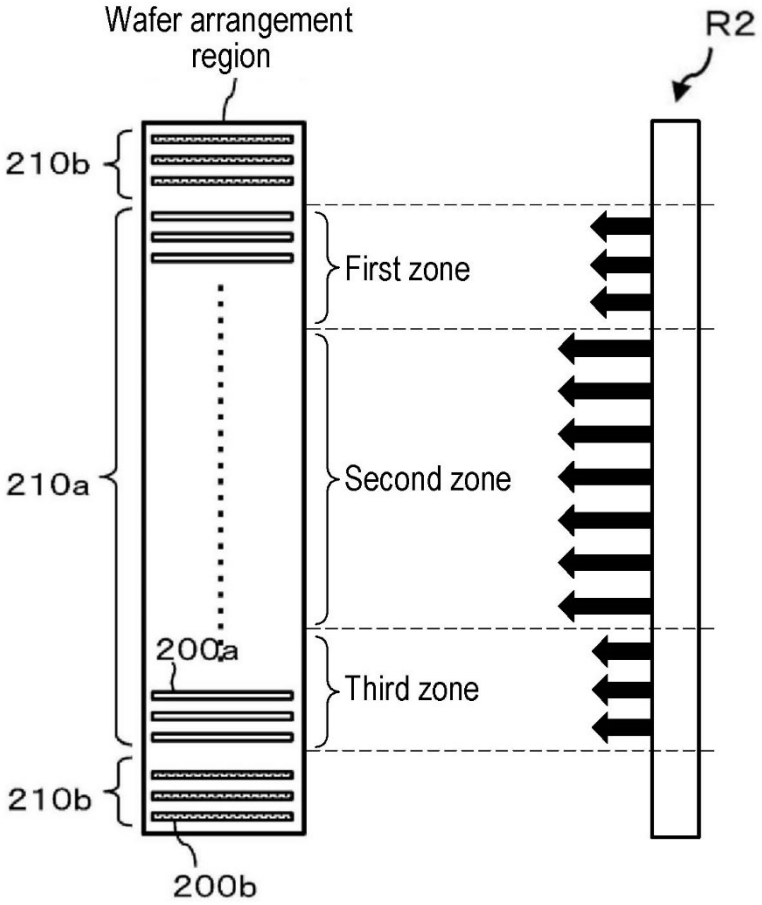
Wafer arrangement region
R2
210b
First zone
210a
Second zone
200a
Third zone
210b
200b

FIG. 8C

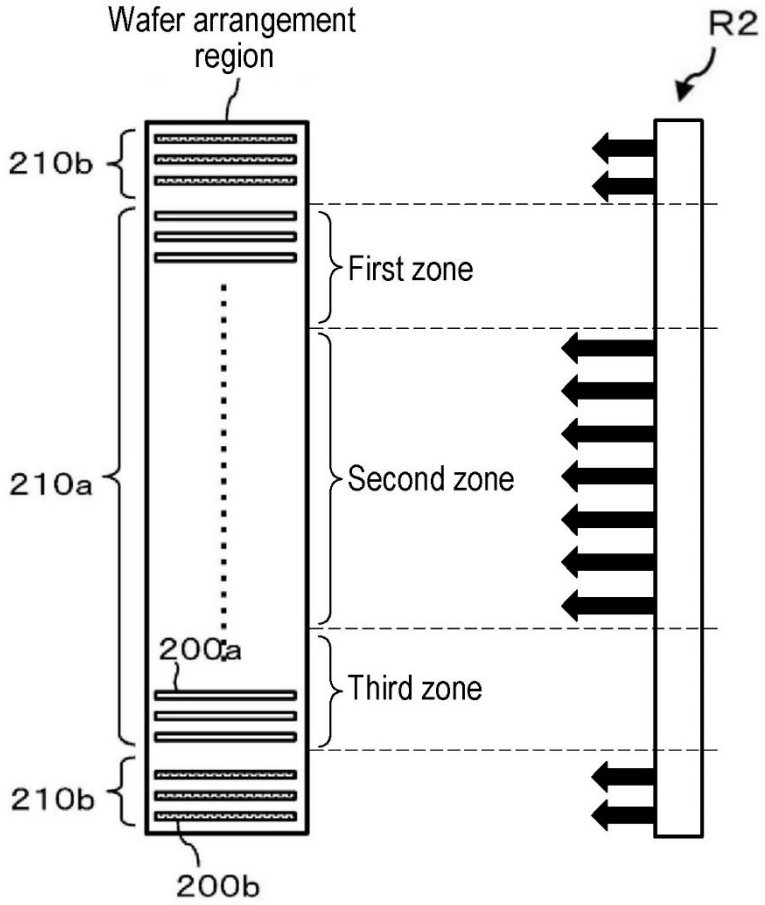
Wafer arrangement region
R2
210b
First zone
210a
Second zone
200a
Third zone
210b
200b

FIG. 8D

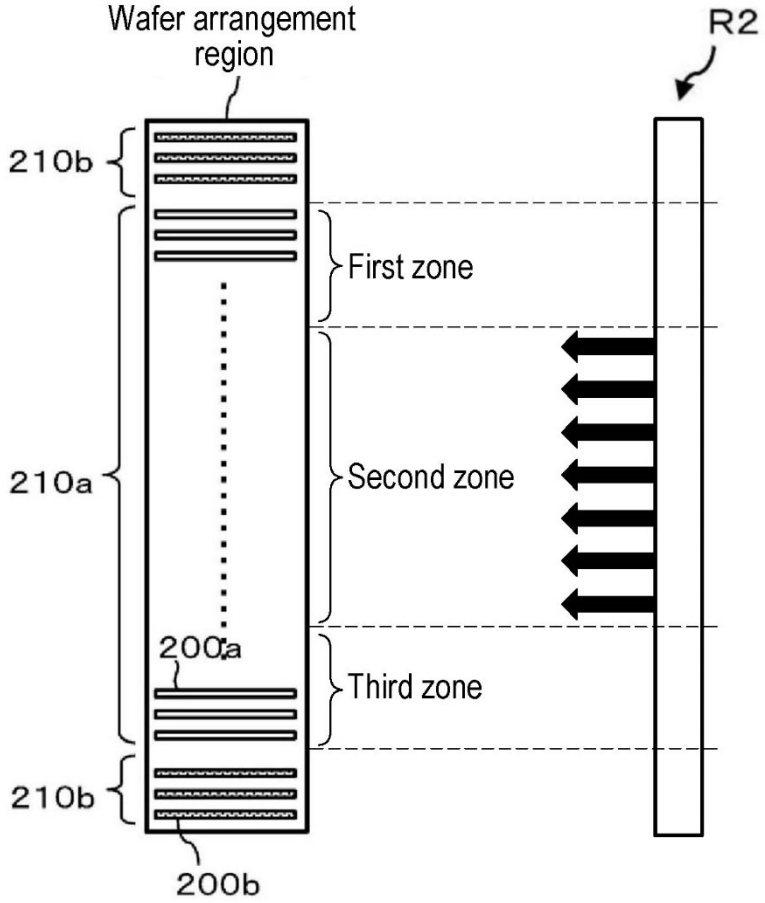
Wafer arrangement region
R2
210b
First zone
210a
Second zone
200a
Third zone
210b
200b

FIG. 8E

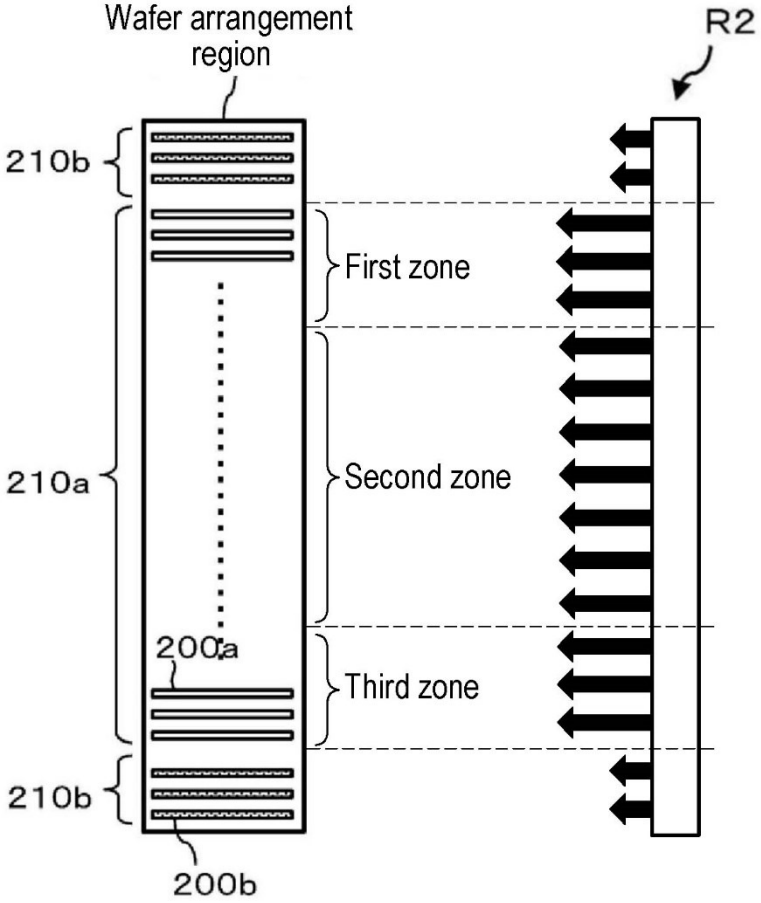
Wafer arrangement region
R2
210b
First zone
210a
Second zone
200a
Third zone
210b
200b