(12) INTERNATIONAL APPLICATION PUBLISHED UNDER THE PATENT COOPERATION TREATY (PCT)

(19) World Intellectual Property Organization
International Bureau

(43) International Publication Date
17 January 2008 (17.01.2008)

PCT

(10) International Publication Number
WO 2008/008073 A1

(51) International Patent Classification:
A45C 11/00 (2006.01)

(21) International Application Number:
PCT/US2006/027469

(22) International Filing Date: 14 July 2006 (14.07.2006)

(25) Filing Language: English

(26) Publication Language: English

(71) Applicant *(for all designated States except US)*: **JOHNSON & JOHNSON VISION CARE, INC.** [US/US]; 7500 Centurion Parkway, Suite 100, Jacksonville, FL 32256 (US).

(72) Inventors; and

(75) Inventors/Applicants *(for US only)*: **TOKARSKI, Michael** [US/US]; 500 N. Lakewood Run, Ponte Vedra, FL 32082 (US). **PECK, James** [US/US]; 13587 Osprey Point, Jacksonville, FL 32224 (US). **DZWILL, Edward** [US/US]; 9 Blossom Lane, Flemington, NJ 08822 (US). **BROCK, George** [US/US]; 919 Garrison Drive, St. Augustine, FL 32092 (US). **SCHULTE, Michael, D.** [US/US]; 3378 River Place Drive, Columbus, OH 43221 (US). **COLEMAN, Ronald, K.** [US/US]; 354 Piedmont Road, Columbus, OH 43214 (US). **Davis, James, R.** [US/US]; 106 Wagnalls Court, Pickerington, OH 43147 (US).

(74) Agent: **JOHNSON, Philip, S.**; One Johnson & Johnson Plaza, New Brunswick, NJ 08933 (US).

(81) Designated States *(unless otherwise indicated, for every kind of national protection available)*: AE, AG, AL, AM, AT, AU, AZ, BA, BB, BG, BR, BW, BY, BZ, CA, CH, CN, CO, CR, CU, CZ, DE, DK, DM, DZ, EC, EE, EG, ES, FI, GB, GD, GE, GH, GM, HN, HR, HU, ID, IL, IN, IS, JP, KE, KG, KM, KN, KP, KR, KZ, LA, LC, LK, LR, LS, LT, LU, LV, LY, MA, MD, MG, MK, MN, MW, MX, MZ, NA, NG, NI, NO, NZ, OM, PG, PH, PL, PT, RO, RS, RU, SC, SD, SE, SG, SK, SL, SM, SY, TJ, TM, TN, TR, TT, TZ, UA, UG, US, UZ, VC, VN, ZA, ZM, ZW.

(84) Designated States *(unless otherwise indicated, for every kind of regional protection available)*: ARIPO (BW, GH, GM, KE, LS, MW, MZ, NA, SD, SL, SZ, TZ, UG, ZM,

[Continued on next page]

(54) Title: SCREW CAP PACKAGE FOR CONTACT LENS

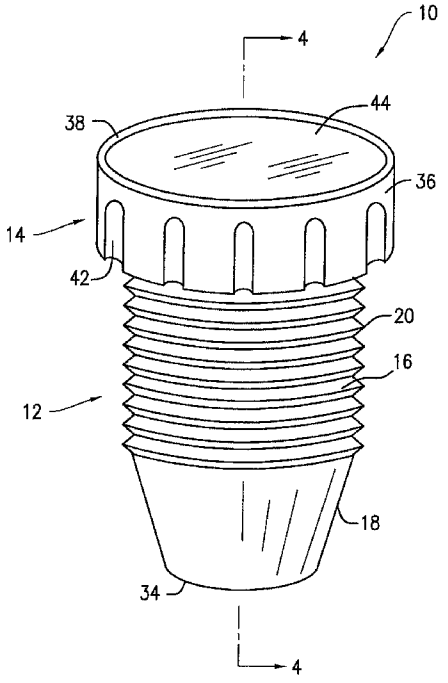

(57) Abstract: A contact lens package (10) includes a holder (12) having a receptacle for holding a contact lens and a (cap14) having a seal for sealing a contact lens within the receptacle. The cap (14) is attached to the holder and is movable from an end of the holder where the receptacle is formed toward an opposite end of the holder. As the cap moves toward the opposite end of the holder, the end of the holder where the receptacle is formed ruptures the seal such that the contact lens can be removed from the package.

WO 2008/008073 A1

ZW), Eurasian (AM, AZ, BY, KG, KZ, MD, RU, TJ, TM), European (AT, BE, BG, CH, CY, CZ, DE, DK, EE, ES, FI, FR, GB, GR, HU, IE, IS, IT, LT, LU, LV, MC, NL, PL, PT, RO, SE, SI, SK, TR), OAPI (BF, BJ, CF, CG, CI, CM, GA, GN, GQ, GW, ML, MR, NE, SN, TD, TG).

Published:

— *with international search report*

For two-letter codes and other abbreviations, refer to the "Guidance Notes on Codes and Abbreviations" appearing at the beginning of each regular issue of the PCT Gazette.