(12) INTERNATIONAL APPLICATION PUBLISHED UNDER THE PATENT COOPERATION TREATY (PCT)

(19) World Intellectual Property Organization
International Bureau

(43) International Publication Date
3 January 2002 (03.01.2002)

PCT

(10) International Publication Number
WO 02/000347 A3

(51) International Patent Classification[7]: B01L 7/00, 3/00, B01J 19/00, G01N 21/07, C12Q 1/68

(21) International Application Number: PCT/US01/20707

(22) International Filing Date: 28 June 2001 (28.06.2001)

(25) Filing Language: English

(26) Publication Language: English

(30) Priority Data:

60/214,642	28 June 2000 (28.06.2000)	US
60/214,508	28 June 2000 (28.06.2000)	US
60/237,051	2 October 2000 (02.10.2000)	US
60/260,063	6 January 2001 (06.01.2001)	US
60/284,637	18 April 2001 (18.04.2001)	US

(71) Applicant: **3M INNOVATIVE PROPERTIES COMPANY** [US/US]; 3M Center, Post Office Box 33427, Saint Paul, MN 55133-3427 (US).

(72) Inventors: **BEDINGHAM, William**; Post Office Box 33427, Saint Paul, MN 55133-3427 (US). **RAJAGOPAL, Raj**; Post Office Box 33427, Saint Paul, MN 55133-3427 (US). **ROBOLE, Barry, W.**; Post Office Box 33427, Saint Paul, MN 55133-3427 (US). **SESHADRI, Kannan**; Post Office Box 33427, Saint Paul, MN 55133-3427 (US).

(74) Agents: **SPRAGUE, Robert W.** et al.; Office of Intellectual Property Counsel, Post Office Box 33427, Saint Paul, MN 55133-3427 (US).

(81) Designated States *(national)*: AE, AG, AL, AM, AT, AT (utility model), AU, AZ, BA, BB, BG, BR, BY, BZ, CA, CH, CN, CO, CR, CU, CZ, CZ (utility model), DE, DE (utility model), DK, DK (utility model), DM, DZ, EC, EE, EE (utility model), ES, FI, FI (utility model), GB, GD, GE, GH, GM, HR, HU, ID, IL, IN, IS, JP, KE, KG, KP, KR, KZ, LC, LK, LR, LS, LT, LU, LV, MA, MD, MG, MK, MN, MW, MX, MZ, NO, NZ, PL, PT, RO, RU, SD, SE, SG, SI, SK, SK (utility model), SL, TJ, TM, TR, TT, TZ, UA, UG, UZ, VN, YU, ZA, ZW.

(84) Designated States *(regional)*: ARIPO patent (GH, GM, KE, LS, MW, MZ, SD, SL, SZ, TZ, UG, ZW), Eurasian patent (AM, AZ, BY, KG, KZ, MD, RU, TJ, TM), European patent (AT, BE, CH, CY, DE, DK, ES, FI, FR, GB, GR, IE, IT, LU, MC, NL, PT, SE, TR), OAPI patent (BF, BJ, CF, CG, CI, CM, GA, GN, GW, ML, MR, NE, SN, TD, TG).

Published:
— *with international search report*
— *before the expiration of the time limit for amending the claims and to be republished in the event of receipt of amendments*

[Continued on next page]

(54) Title: SAMPLE PROCESSING DEVICES, SYSTEMS AND METHODS

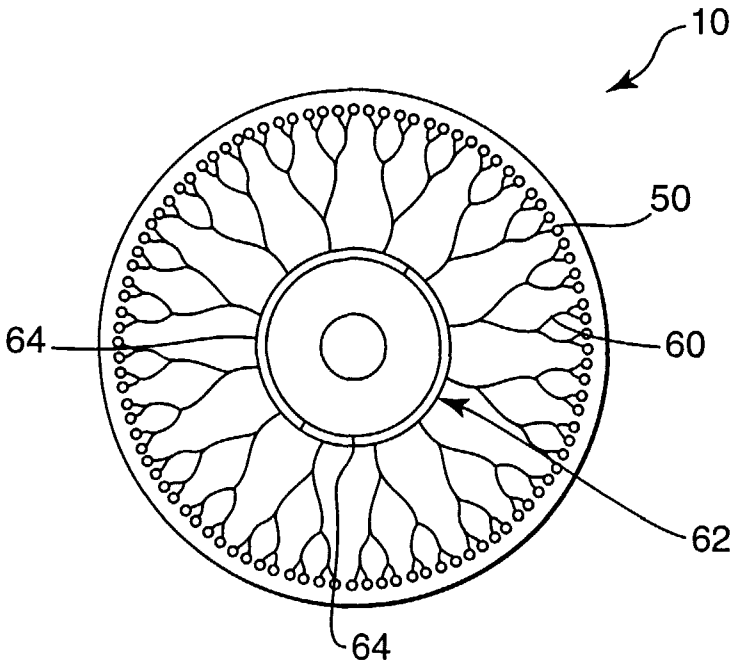

(57) Abstract: Devices, systems, and methods for processing sample materials. The sample materials may be located in a plurality of process chambers in the device, which is in the form of a disk, rotated during heating of the sample materials. The temperature of the disk may be controlled by directing electromagnetic energy at its bottom surface while rotating it. Sample materials may be moved betwwen process chambers using centrifugal force.

WO 02/000347 A3

(88) Date of publication of the international search report:
10 October 2002

For two-letter codes and other abbreviations, refer to the "Guidance Notes on Codes and Abbreviations" appearing at the beginning of each regular issue of the PCT Gazette.