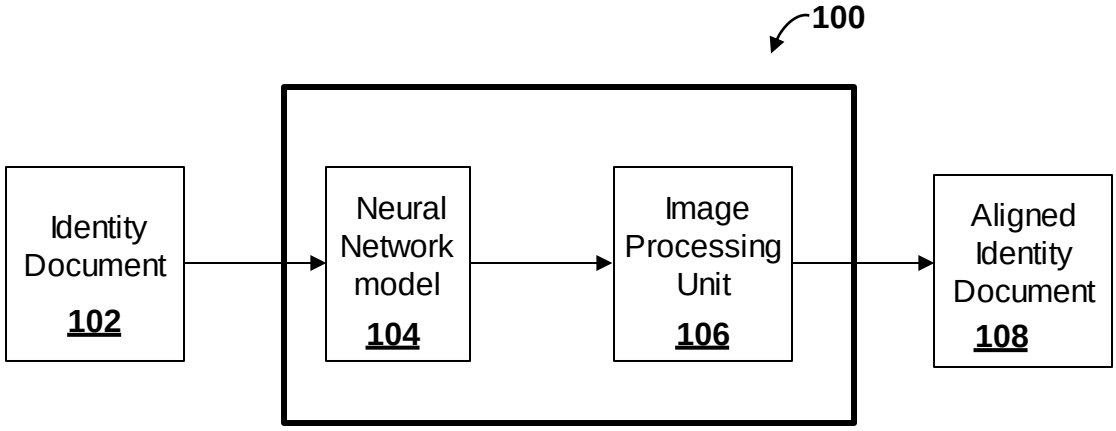
100
Identity Document
102
Neural Network model
104
Image Processing Unit
106
Aligned Identity Document
108

FIG. 1A

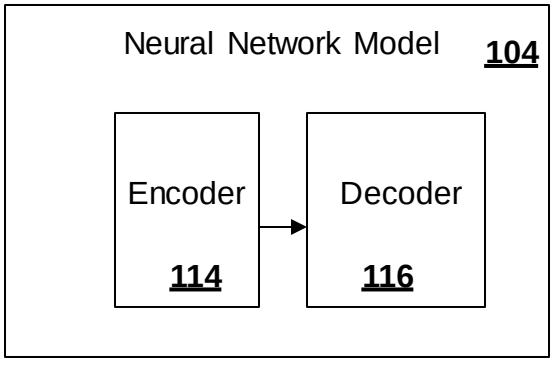
Neural Network Model
104
Encoder
114
Decoder
116

FIG. 1B

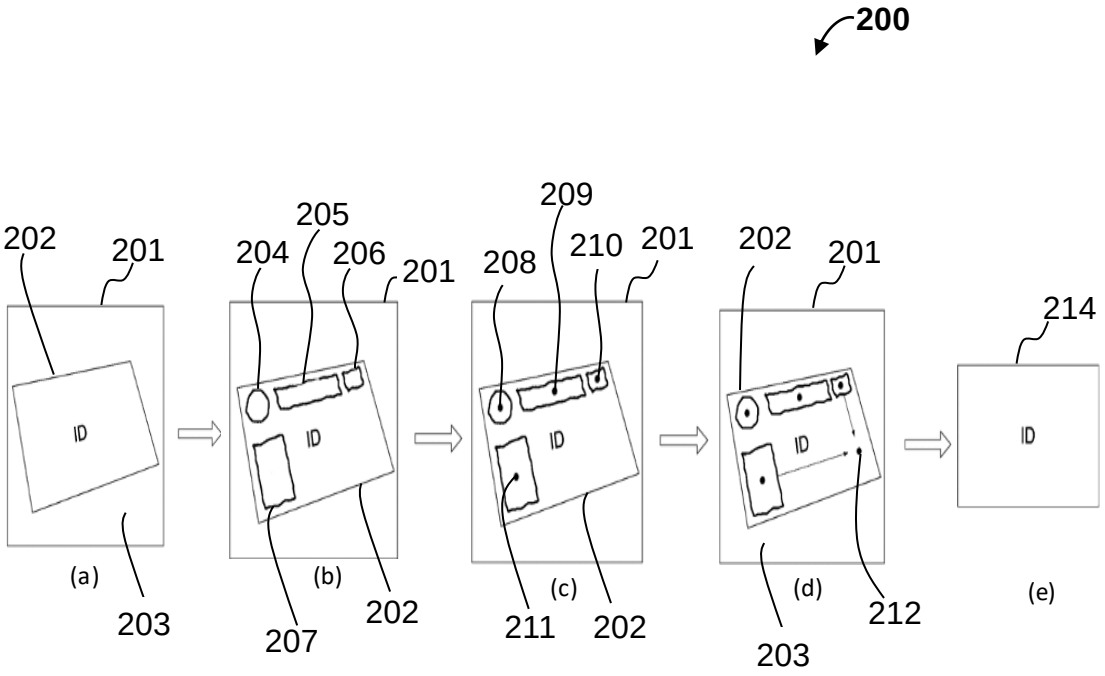

FIG. 2A FIG. 2B FIG. 2C FIG. 2D FIG. 2E

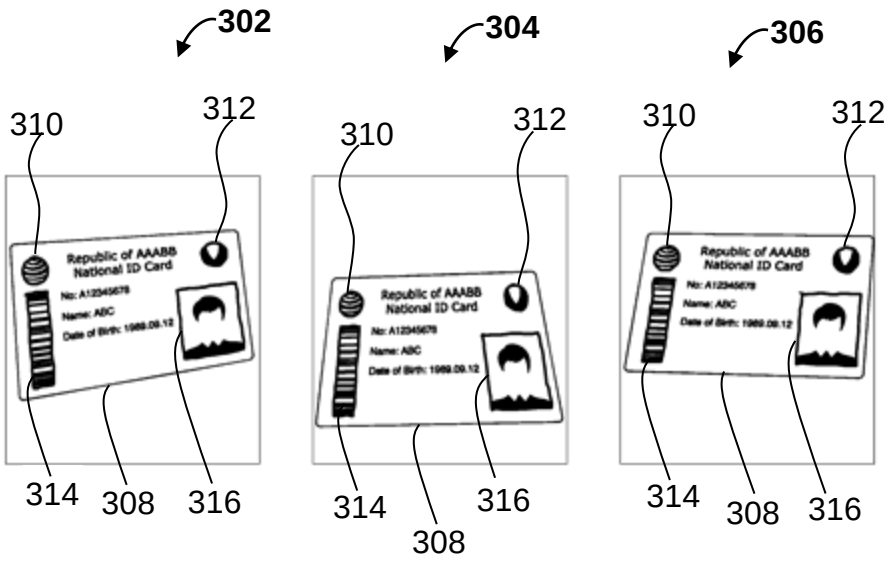

FIG. 3A

FIG. 3B

FIG. 3C

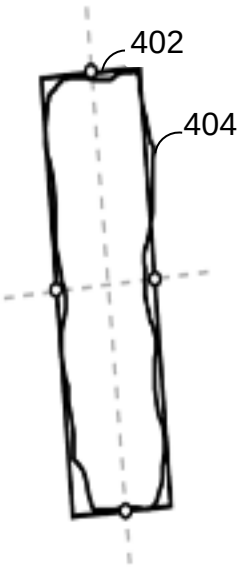

FIG. 4A

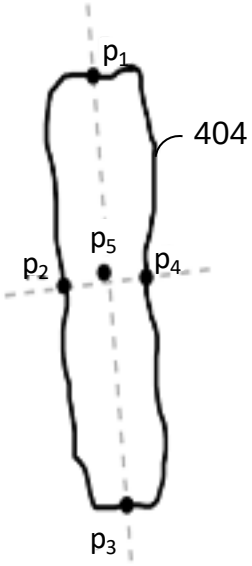

FIG. 4B

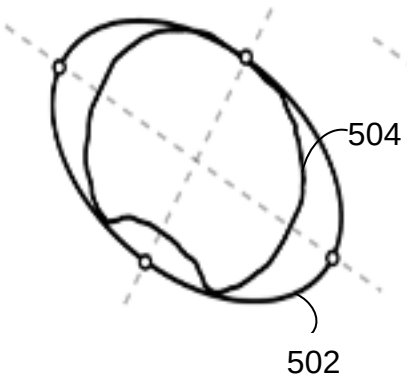

FIG. 5A

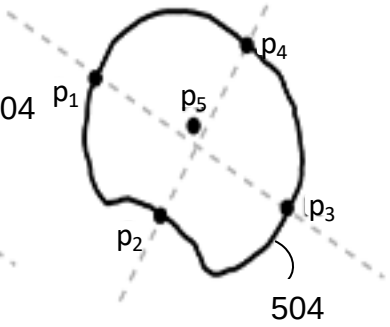

FIG. 5B

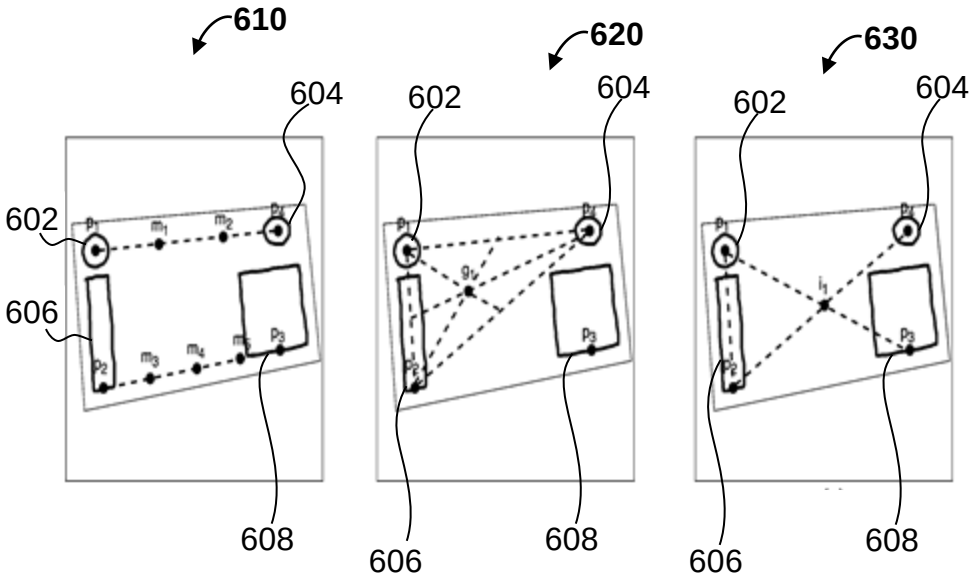

FIG. 6A FIG. 6B FIG. 6C

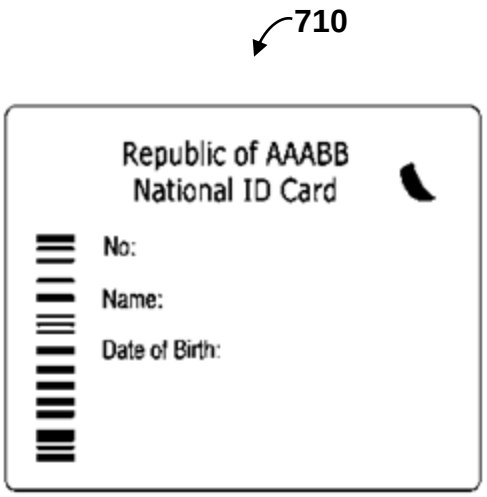
710
Republic of AAABB
National ID Card
No:
Name:
Date of Birth:

FIG. 7A

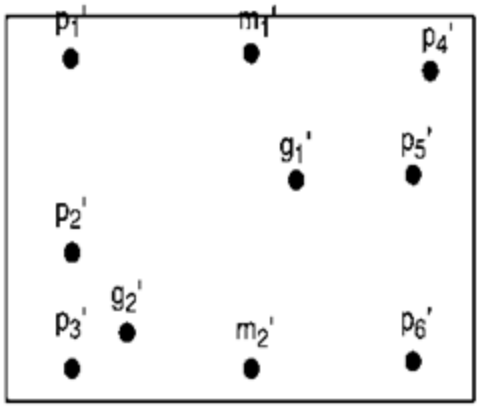
p1'
m1'
p4'
g1'
p5'
p2'
g2'
p3'
m2'
p6'

FIG. 7B

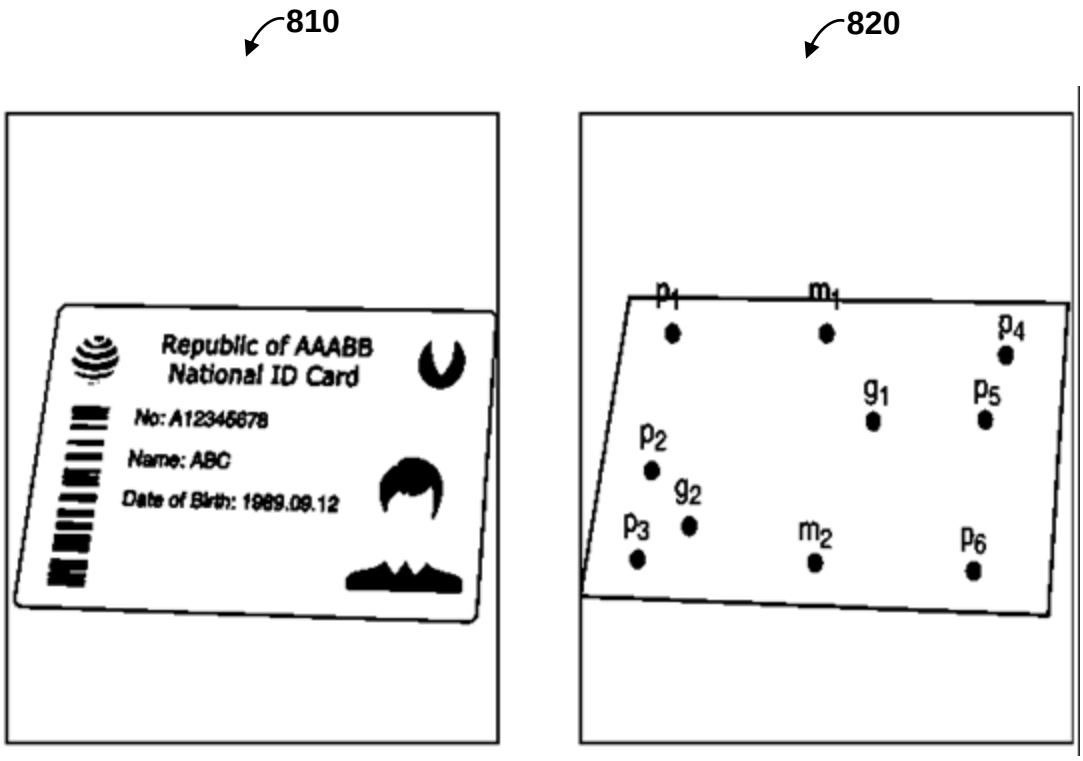
810
820
Republic of AAABB
National ID Card
No: A12345678
Name: ABC
Date of Birth: 1989.09.12
p1
m1
p4
g1
p5
p2
g2
p3
m2
p6

FIG. 8A

FIG. 8B

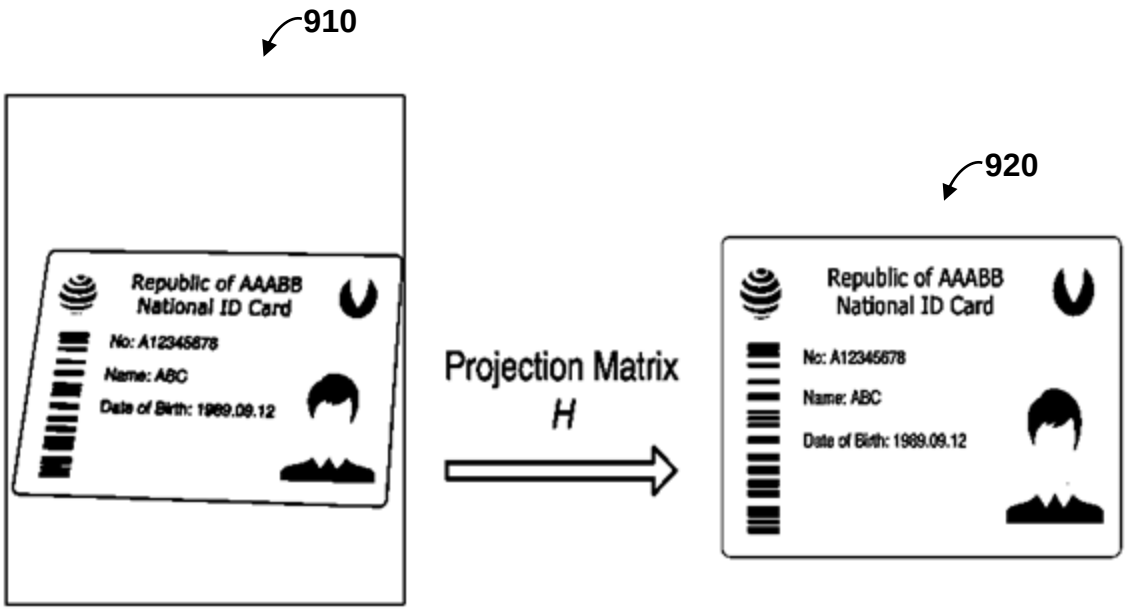
910
Republic of AAABB
National ID Card
No: A12345678
Name: ABC
Date of Birth: 1989.09.12
Projection Matrix
H
920
Republic of AAABB
National ID Card
No: A12345678
Name: ABC
Date of Birth: 1989.09.12

FIG. 9A

FIG. 9B

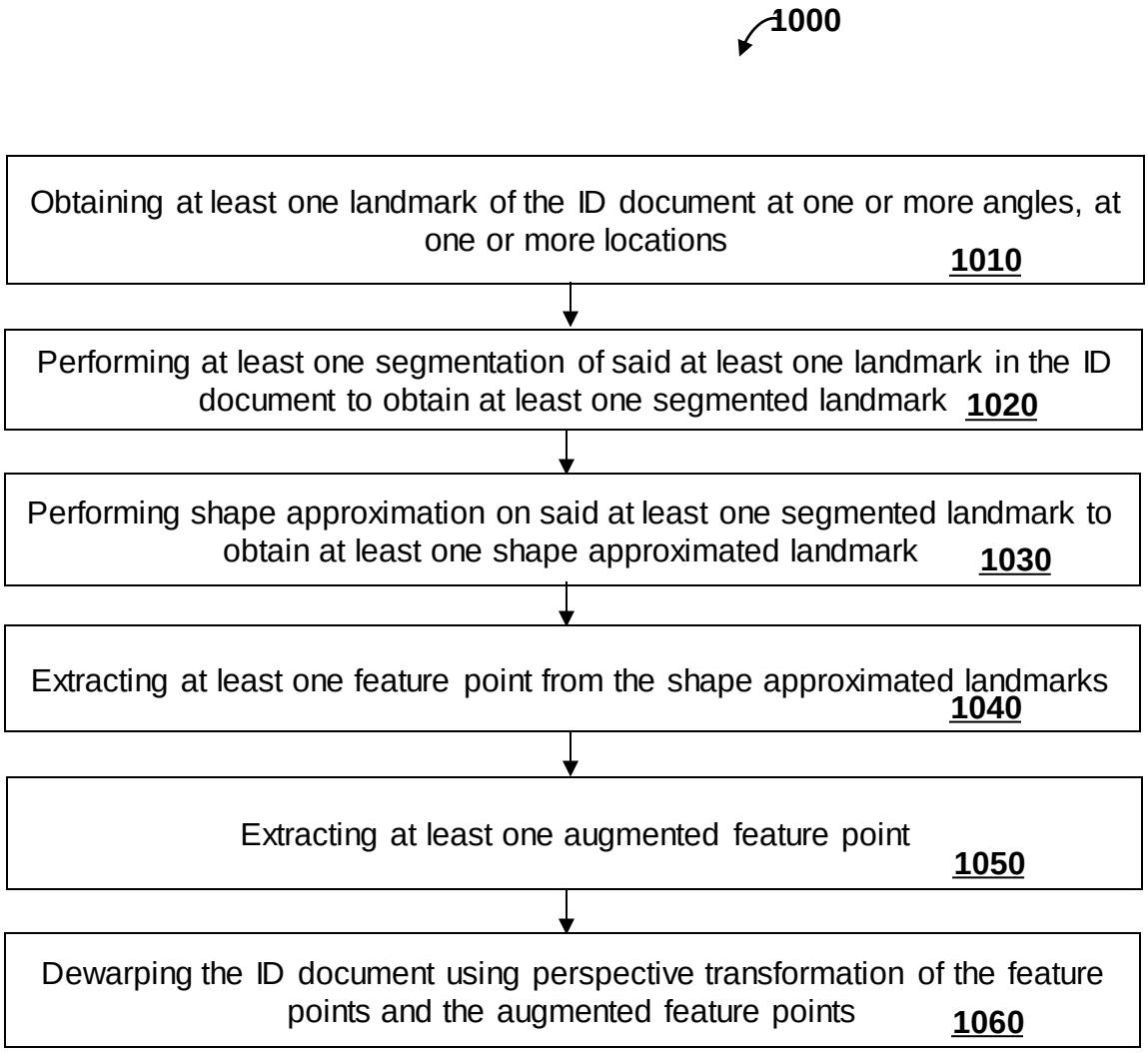
1000
Obtaining at least one landmark of the ID document at one or more angles, at one or more locations
1010
Performing at least one segmentation of said at least one landmark in the ID document to obtain at least one segmented landmark
1020
Performing shape approximation on said at least one segmented landmark to obtain at least one shape approximated landmark
1030
Extracting at least one feature point from the shape approximated landmarks
1040
Extracting at least one augmented feature point
1050
Dewarping the ID document using perspective transformation of the feature points and the augmented feature points
1060

FIG. 10

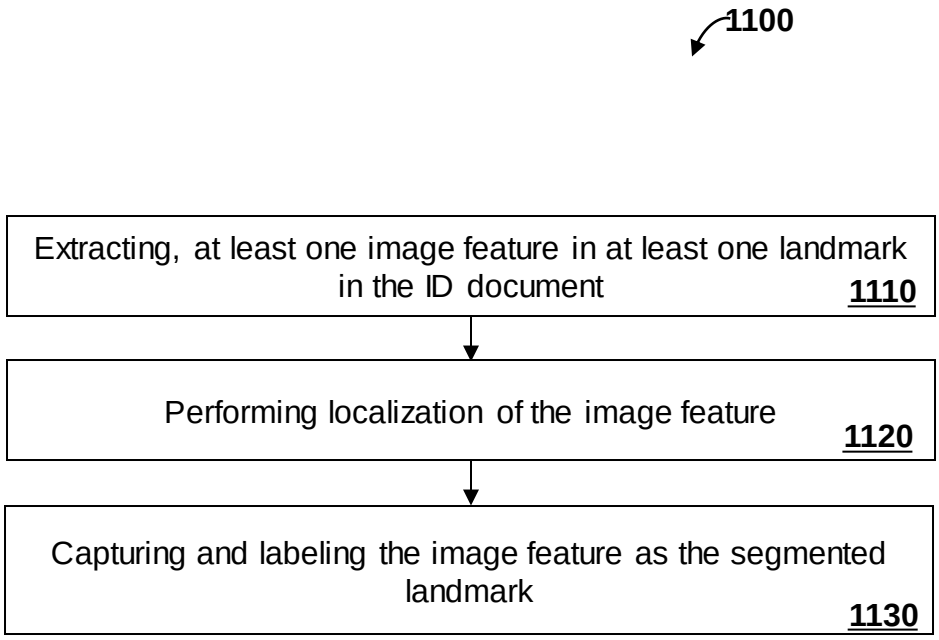
1100
Extracting, at least one image feature in at least one landmark in the ID document
1110
Performing localization of the image feature
1120
Capturing and labeling the image feature as the segmented landmark
1130

FIG. 11

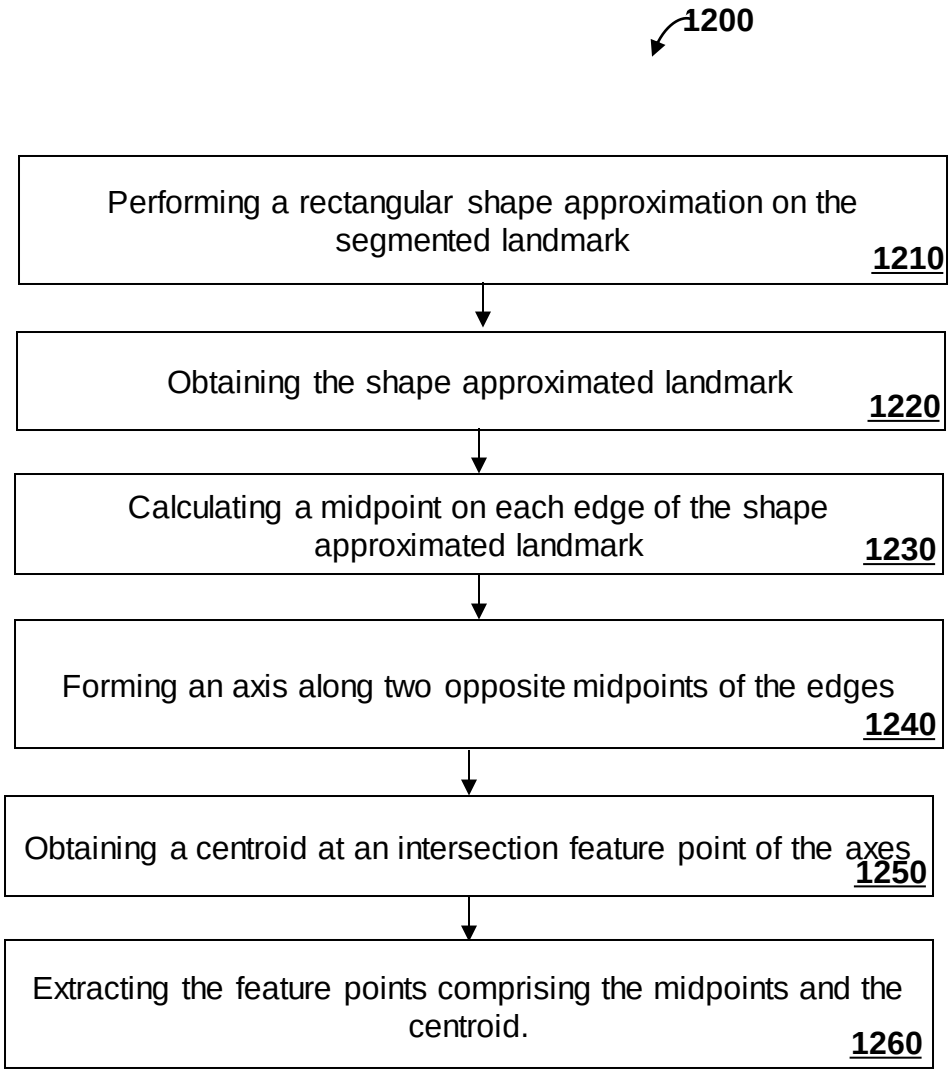
1200
Performing a rectangular shape approximation on the segmented landmark
1210
Obtaining the shape approximated landmark
1220
Calculating a midpoint on each edge of the shape approximated landmark
1230
Forming an axis along two opposite midpoints of the edges
1240
Obtaining a centroid at an intersection feature point of the axes
1250
Extracting the feature points comprising the midpoints and the centroid.
1260

FIG. 12

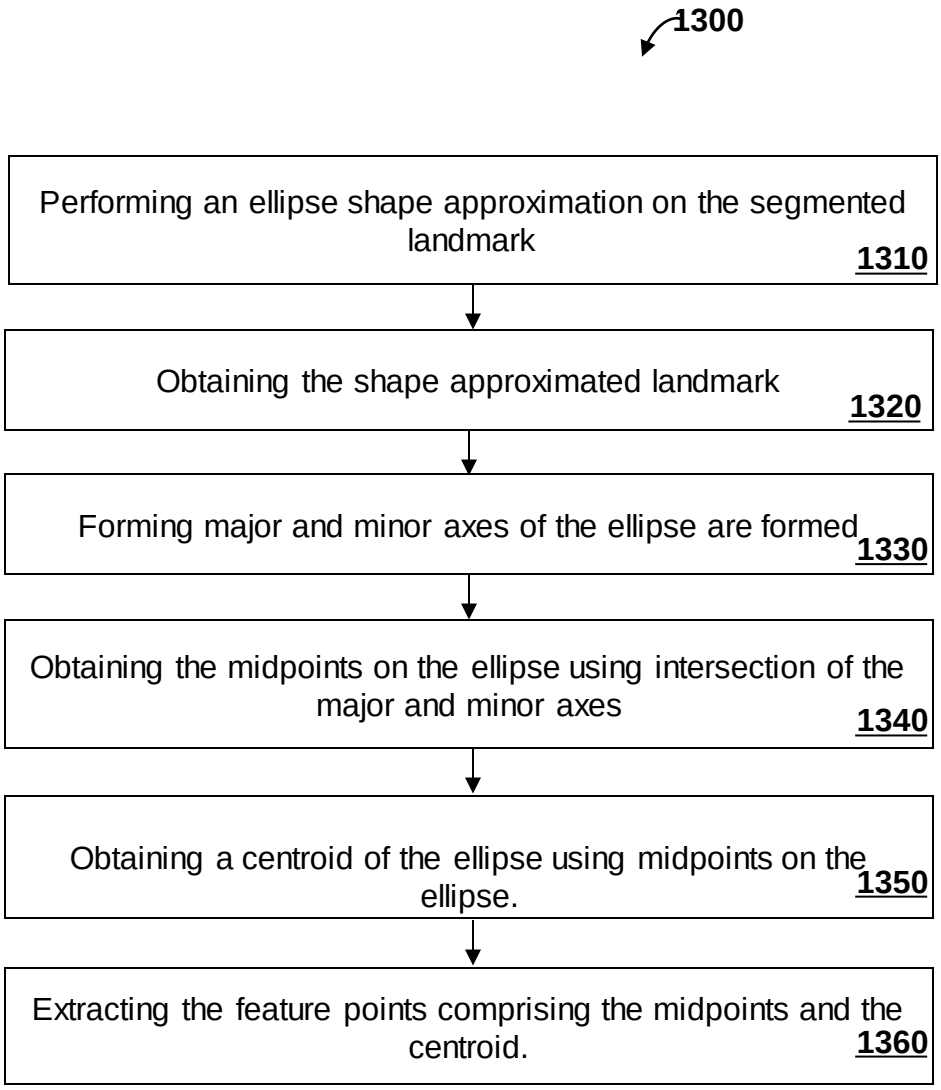
1300
Performing an ellipse shape approximation on the segmented landmark
1310
Obtaining the shape approximated landmark
1320
Forming major and minor axes of the ellipse are formed
1330
Obtaining the midpoints on the ellipse using intersection of the major and minor axes
1340
Obtaining a centroid of the ellipse using midpoints on the ellipse.
1350
Extracting the feature points comprising the midpoints and the centroid.
1360

FIG. 13

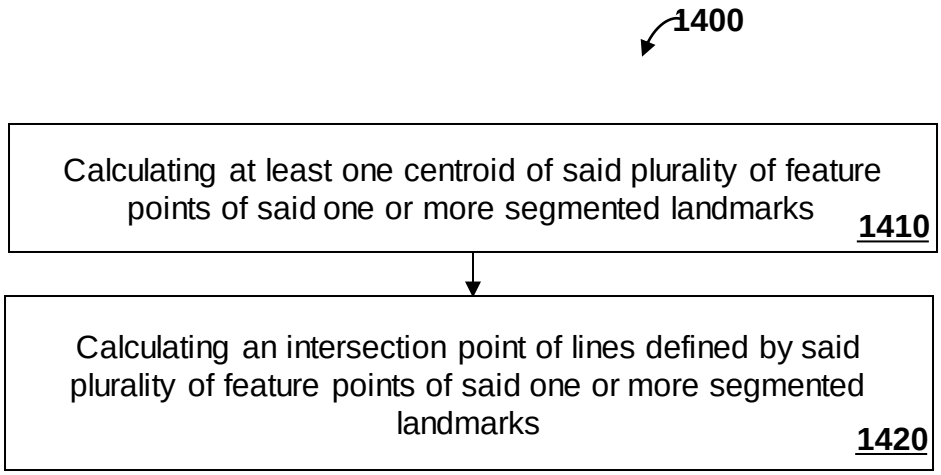
1400
Calculating at least one centroid of said plurality of feature points of said one or more segmented landmarks
1410
Calculating an intersection point of lines defined by said plurality of feature points of said one or more segmented landmarks
1420

FIG. 14

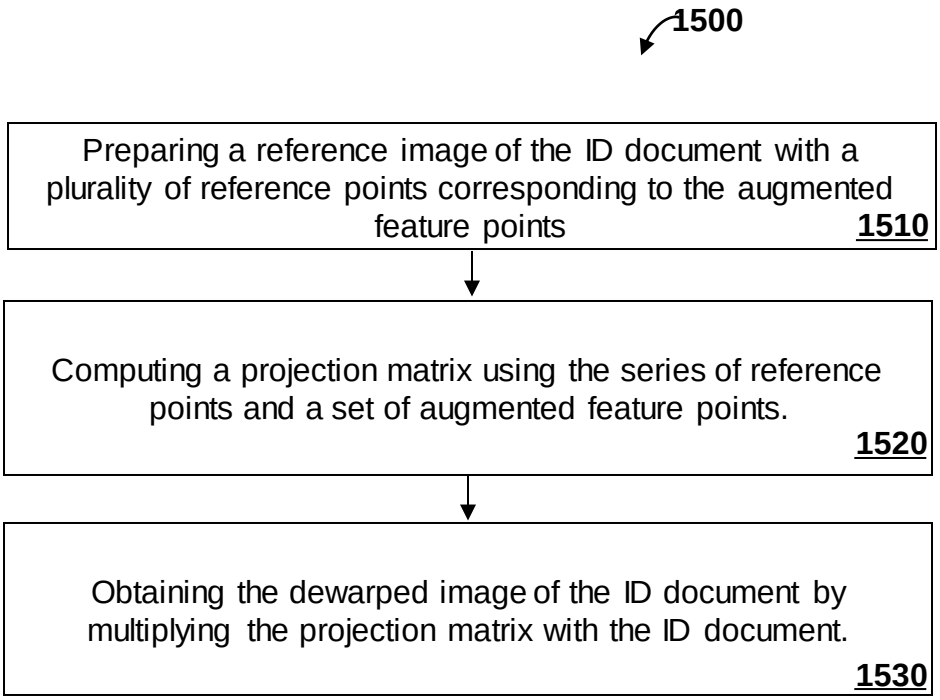
1500
Preparing a reference image of the ID document with a plurality of reference points corresponding to the augmented feature points
1510
Computing a projection matrix using the series of reference points and a set of augmented feature points.
1520
Obtaining the dewarped image of the ID document by multiplying the projection matrix with the ID document.
1530

FIG. 15