Fig. 1

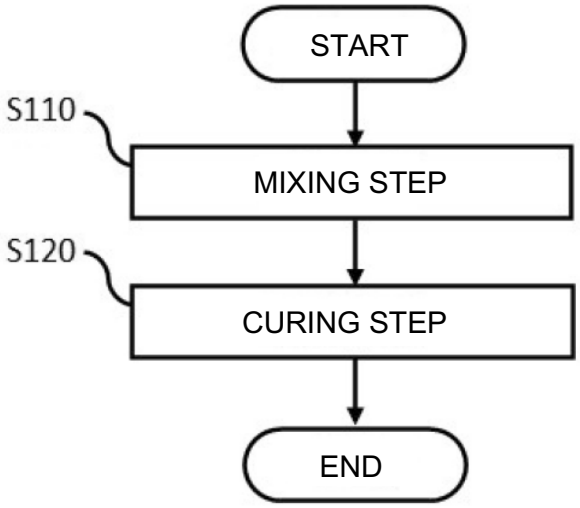

Fig. 2

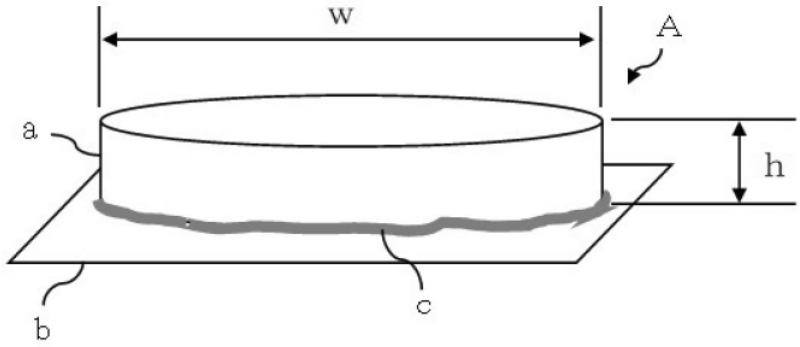

Fig. 3

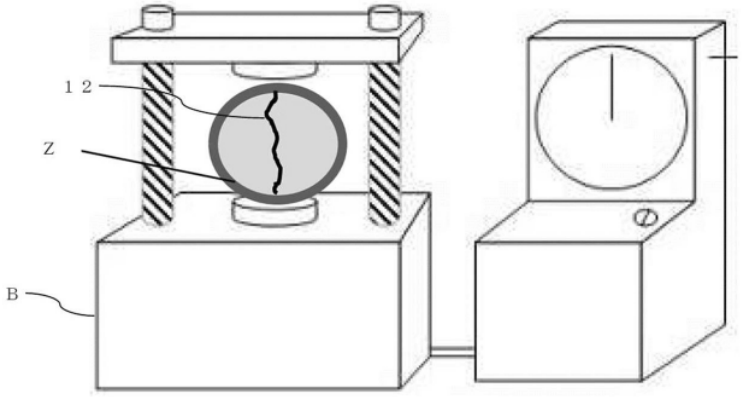

Fig. 4

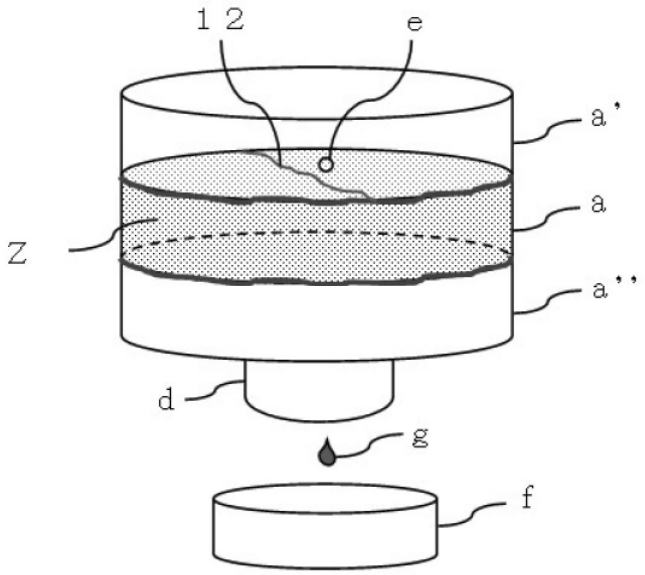

Fig. 5

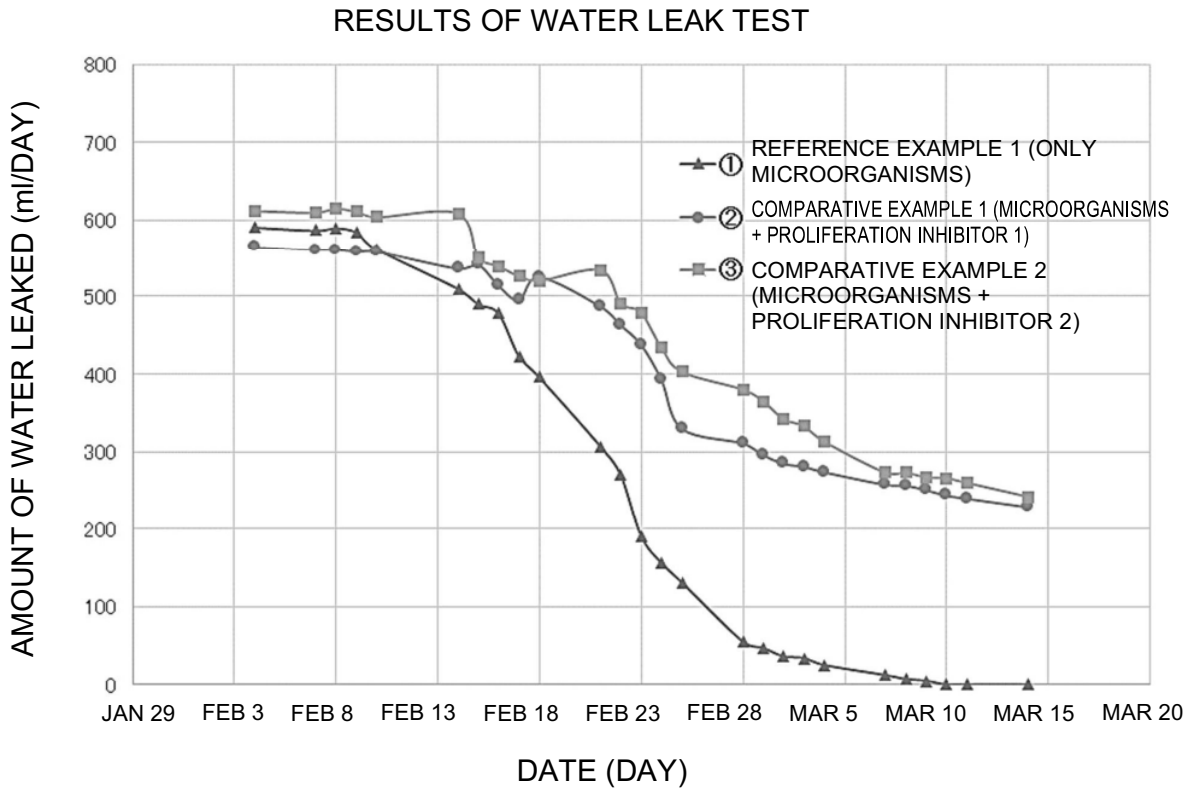
RESULTS OF WATER LEAK TEST
AMOUNT OF WATER LEAKED (ml/DAY)
800
700
600
500
400
300
200
100
0
JAN 29
FEB 3
FEB 8
FEB 13
FEB 18
FEB 23
FEB 28
MAR 5
MAR 10
MAR 15
MAR 20
DATE (DAY)
① REFERENCE EXAMPLE 1 (ONLY MICROORGANISMS)
② COMPARATIVE EXAMPLE 1 (MICROORGANISMS + PROLIFERATION INHIBITOR 1)
③ COMPARATIVE EXAMPLE 2 (MICROORGANISMS + PROLIFERATION INHIBITOR 2)

Fig. 6

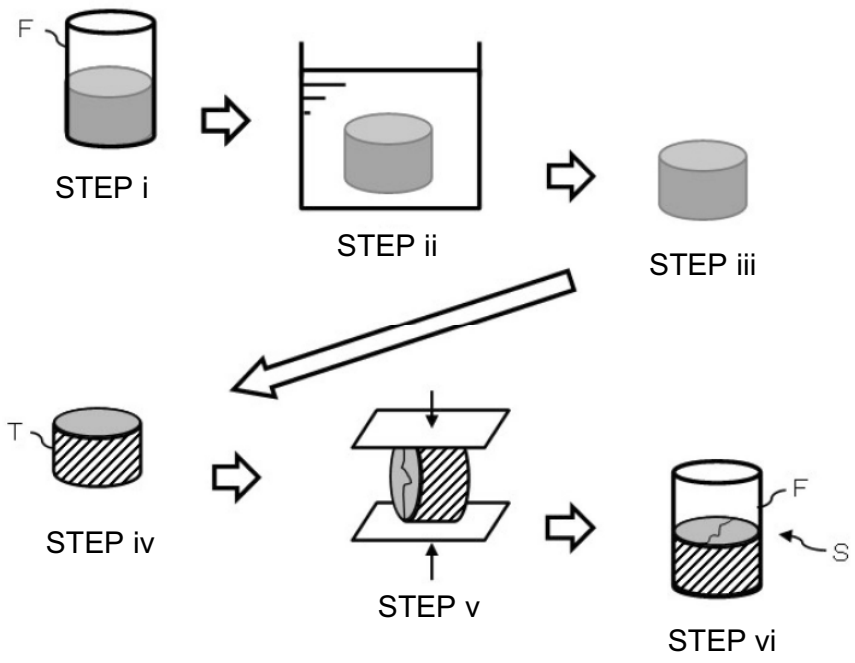
F
STEP i
STEP ii
STEP iii
T
STEP iv
STEP v
F
S
STEP vi

Fig. 7

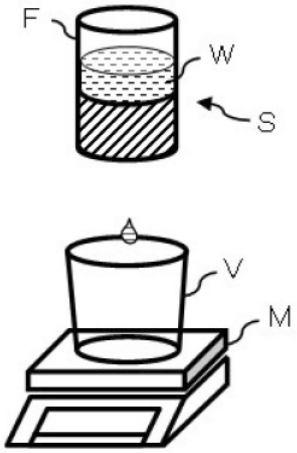
F
W
S
V
M

Fig. 8

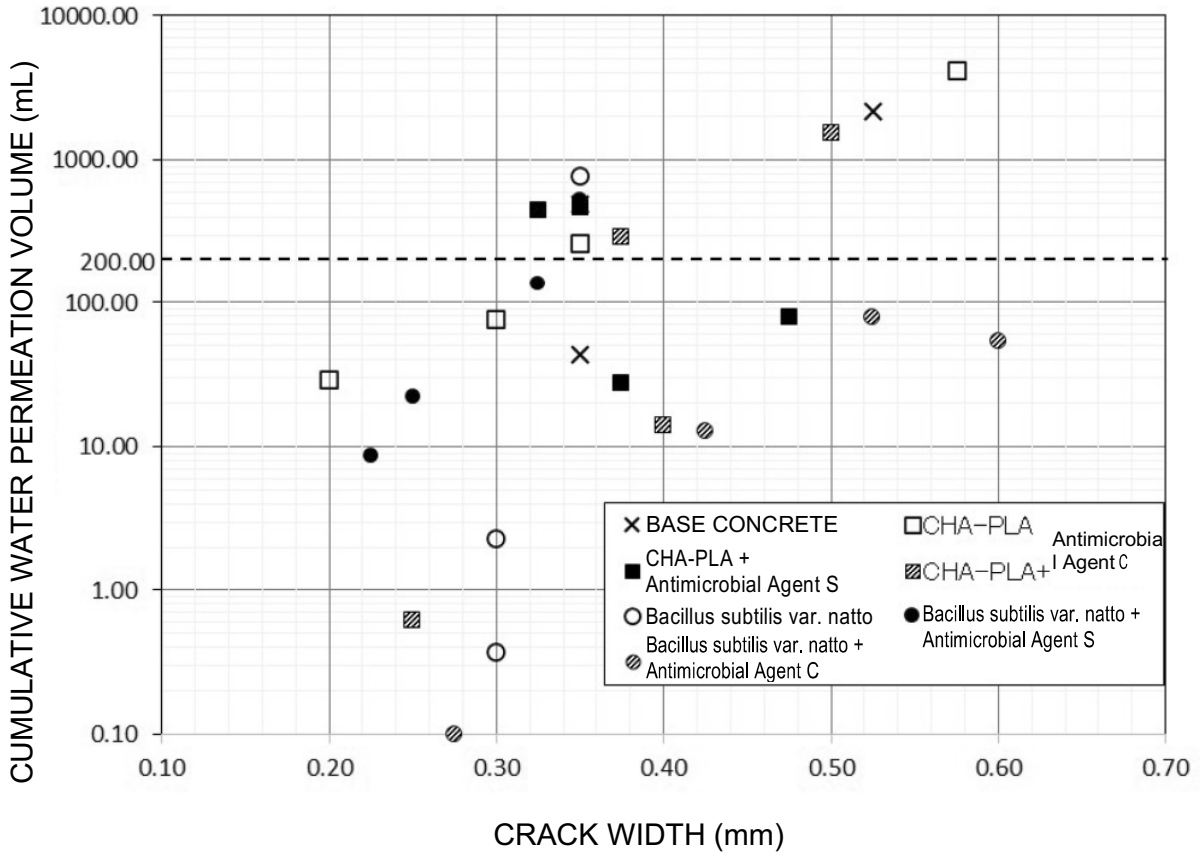
10000.00
1000.00
200.00
100.00
10.00
1.00
0.10
0.10
0.20
0.30
0.40
0.50
0.60
0.70
CUMULATIVE WATER PERMEATION VOLUME (mL)
CRACK WIDTH (mm)
BASE CONCRETE
CHA-PLA
CHA-PLA + Antimicrobial Agent S
CHA-PLA+ Antimicrobial Agent C
Bacillus subtilis var. natto
Bacillus subtilis var. natto + Antimicrobial Agent S
Bacillus subtilis var. natto + Antimicrobial Agent C