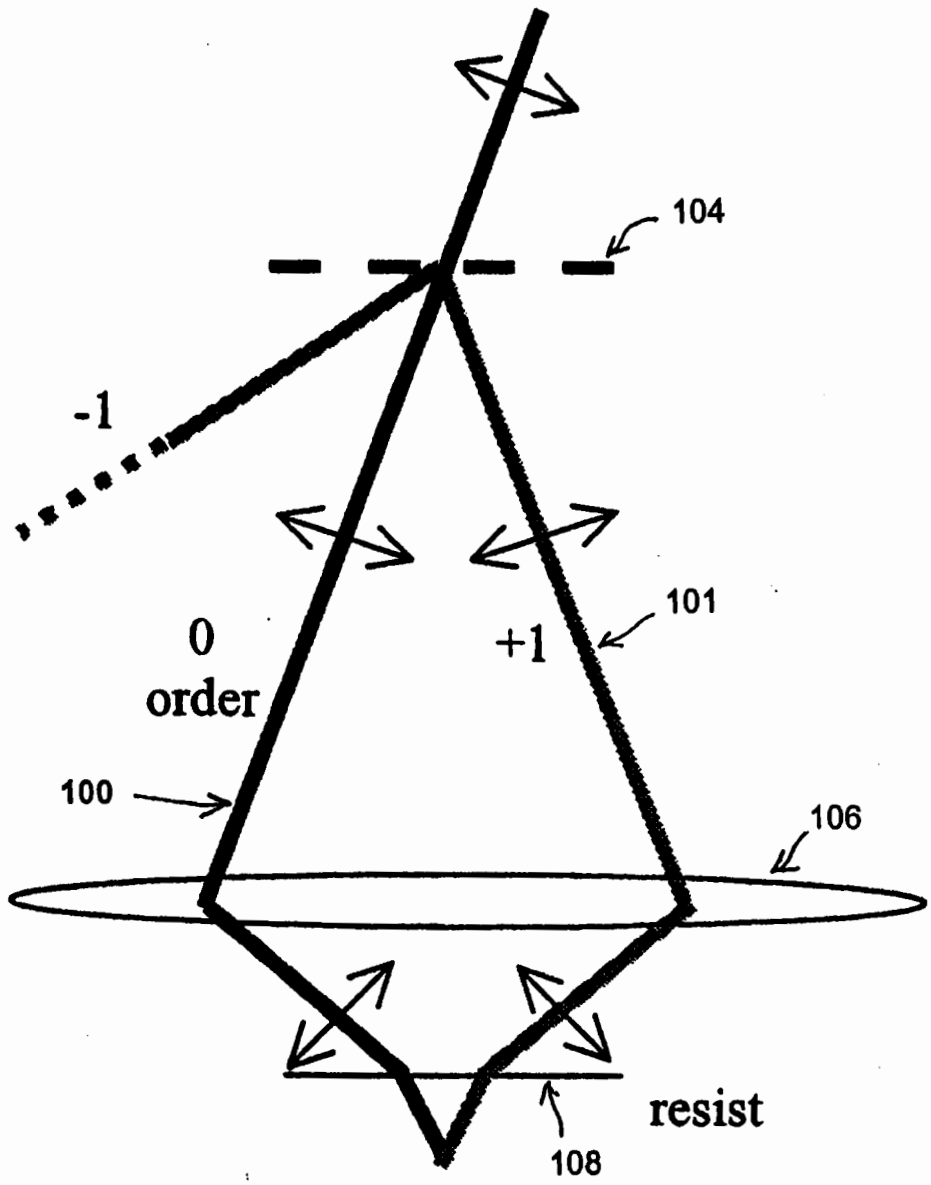

Figure 1A

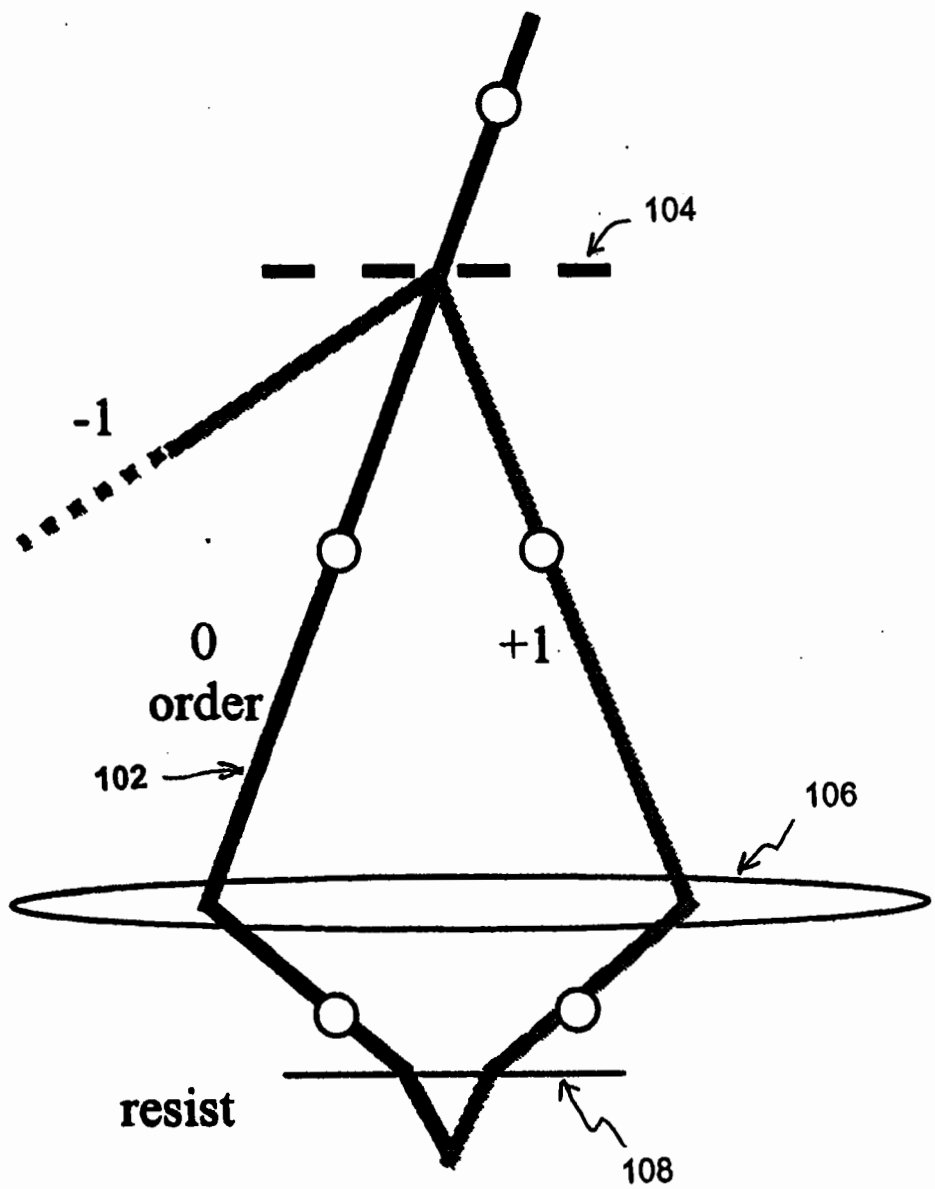

Figure 1B

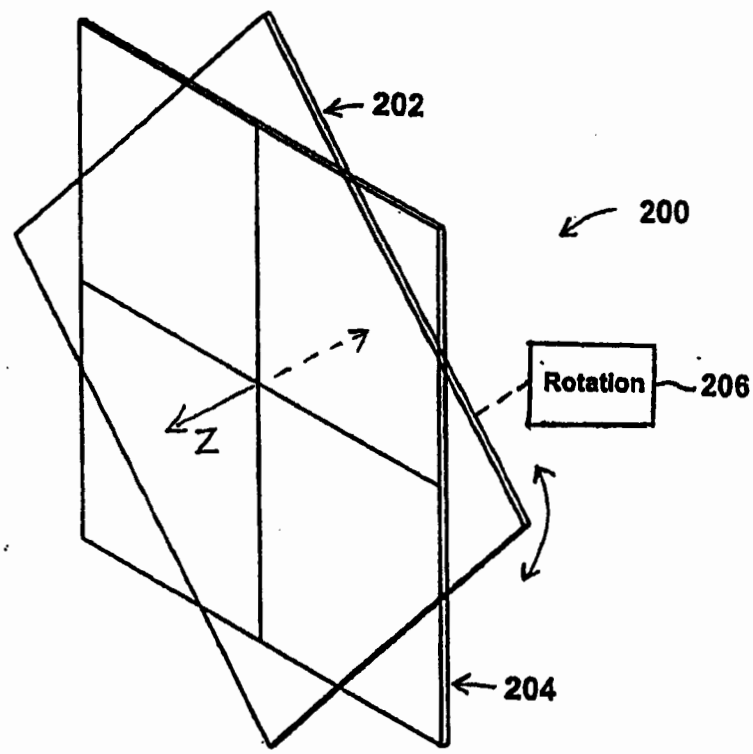

Figure 2

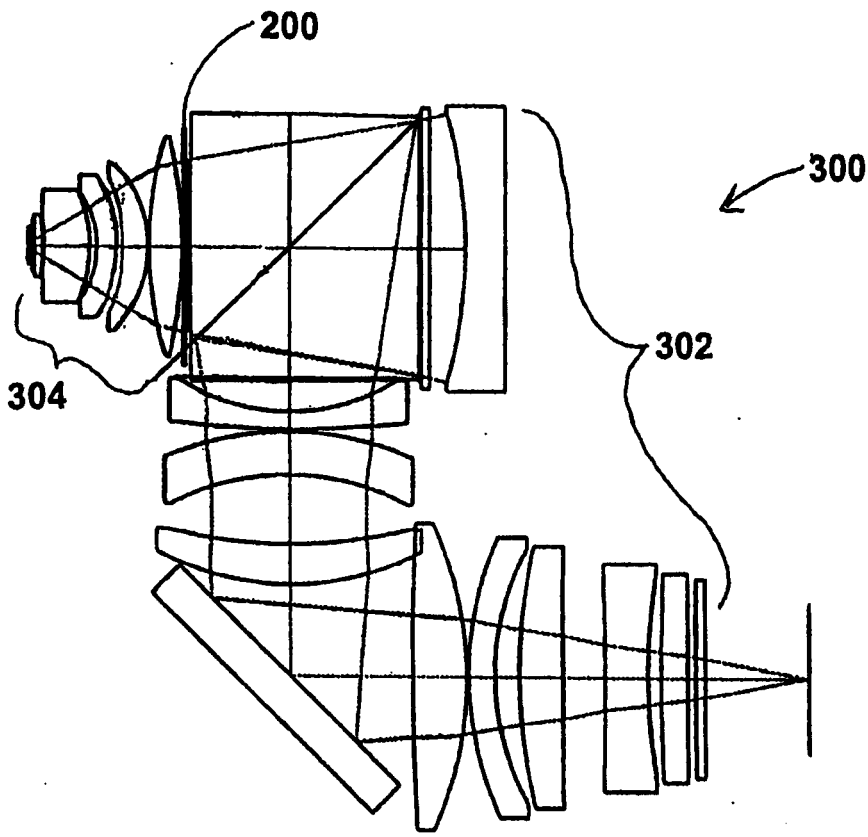

Figure 3

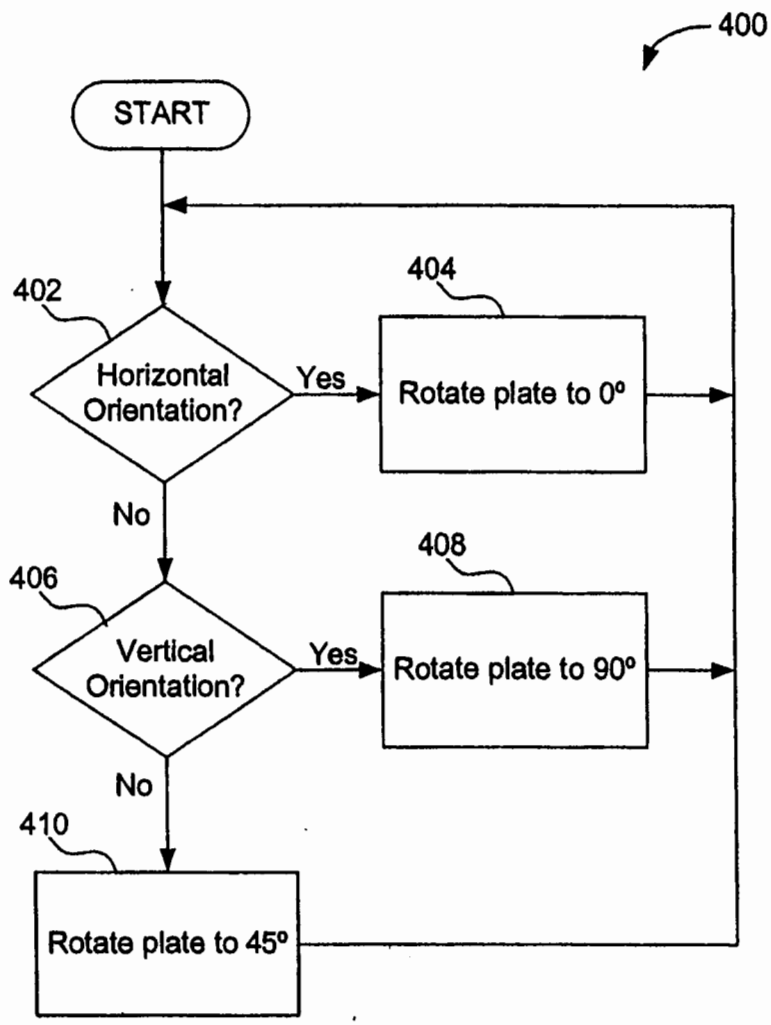
400
START
402
Horizontal Orientation?
Yes
404
Rotate plate to 0°
No
406
Vertical Orientation?
Yes
408
Rotate plate to 90°
No
410
Rotate plate to 45°

FIG. 4