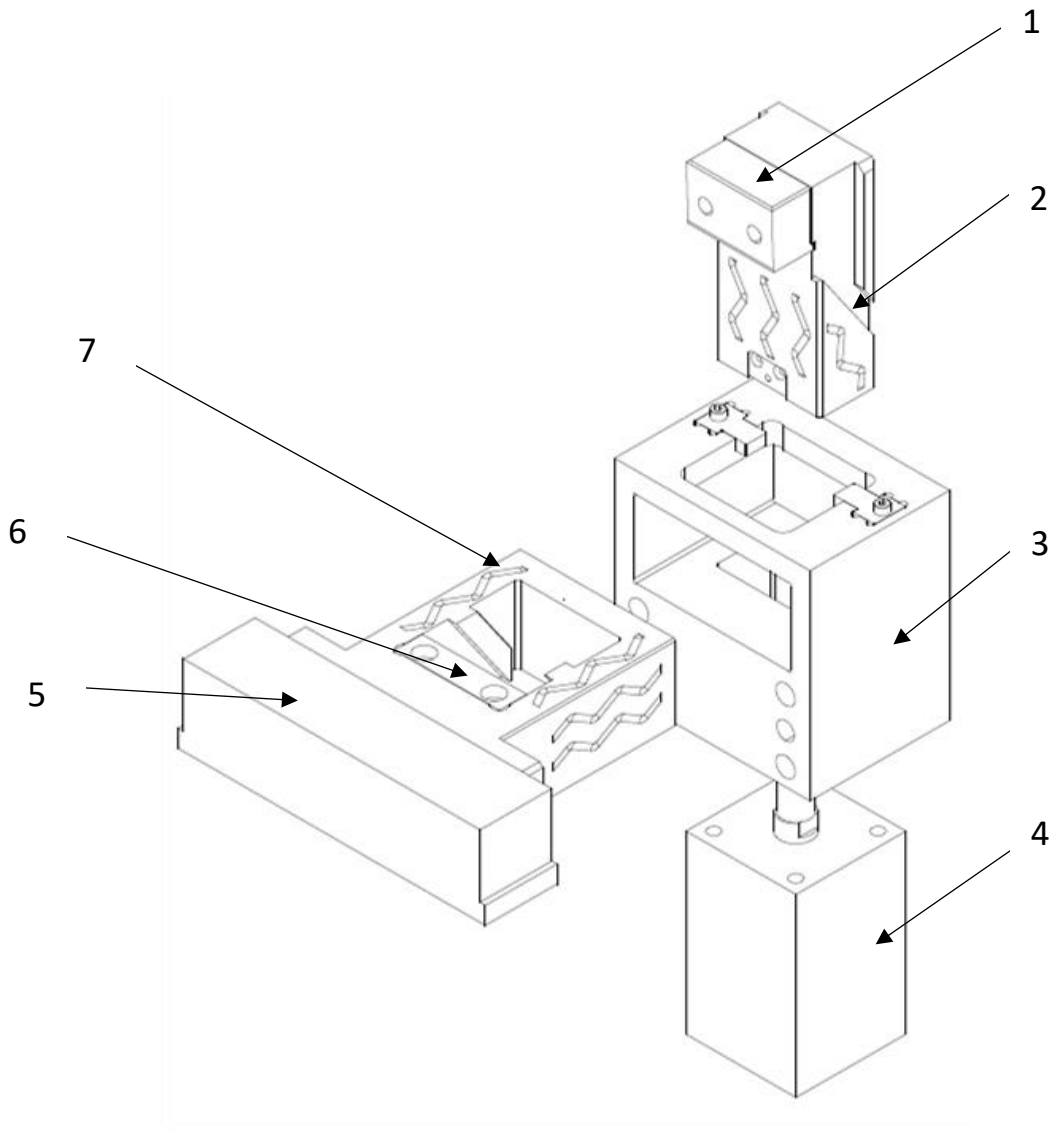

FIGURE 1

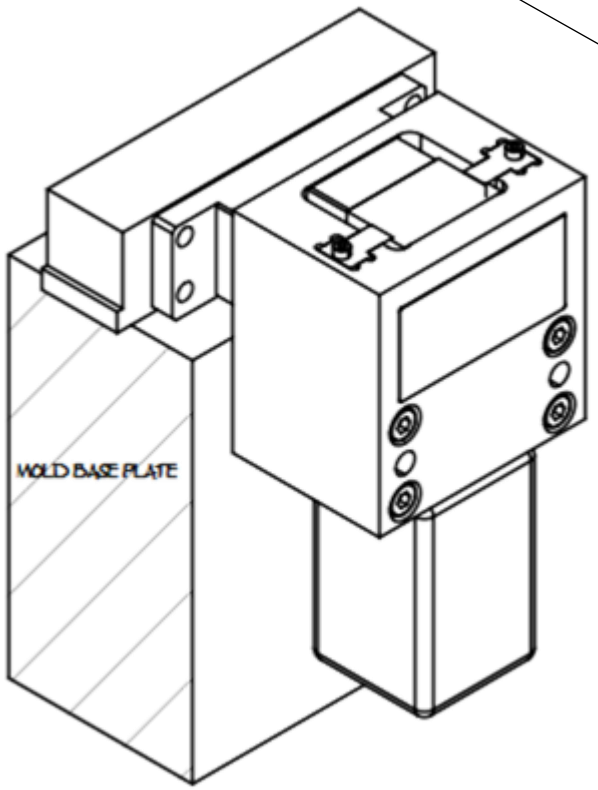

Figure 2A

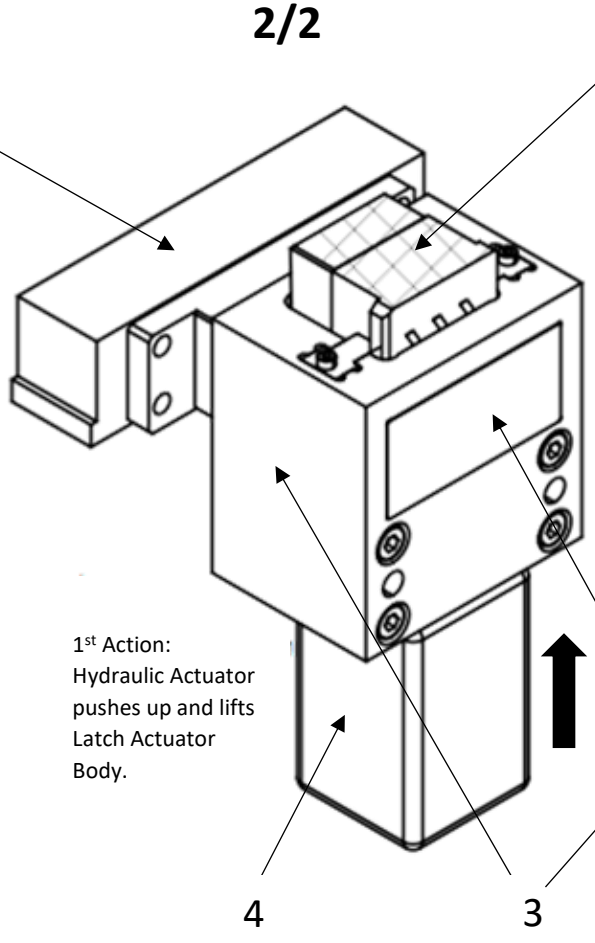

Figure 2B

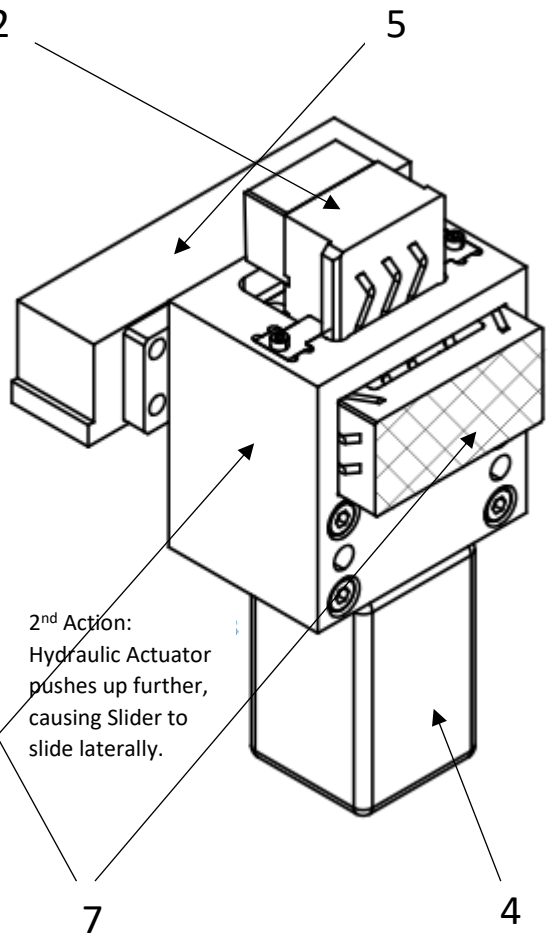

Figure 2C