FIG. 1

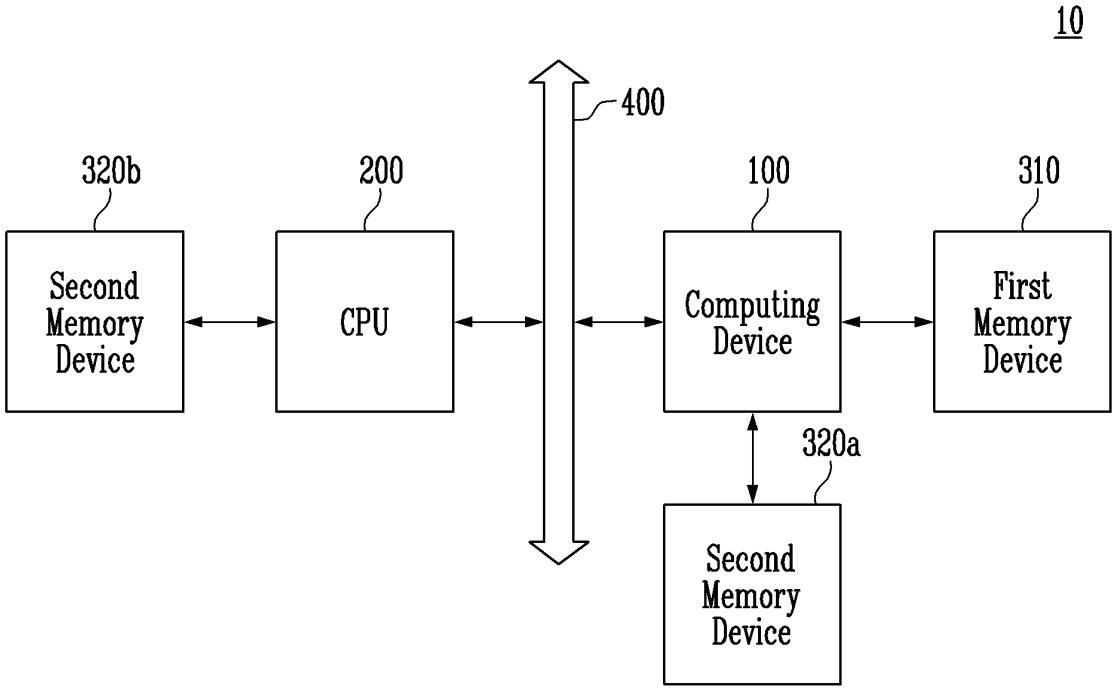
10
400
320b
200
100
310
Second Memory Device
CPU
Computing Device
First Memory Device
320a
Second Memory Device

FIG. 2

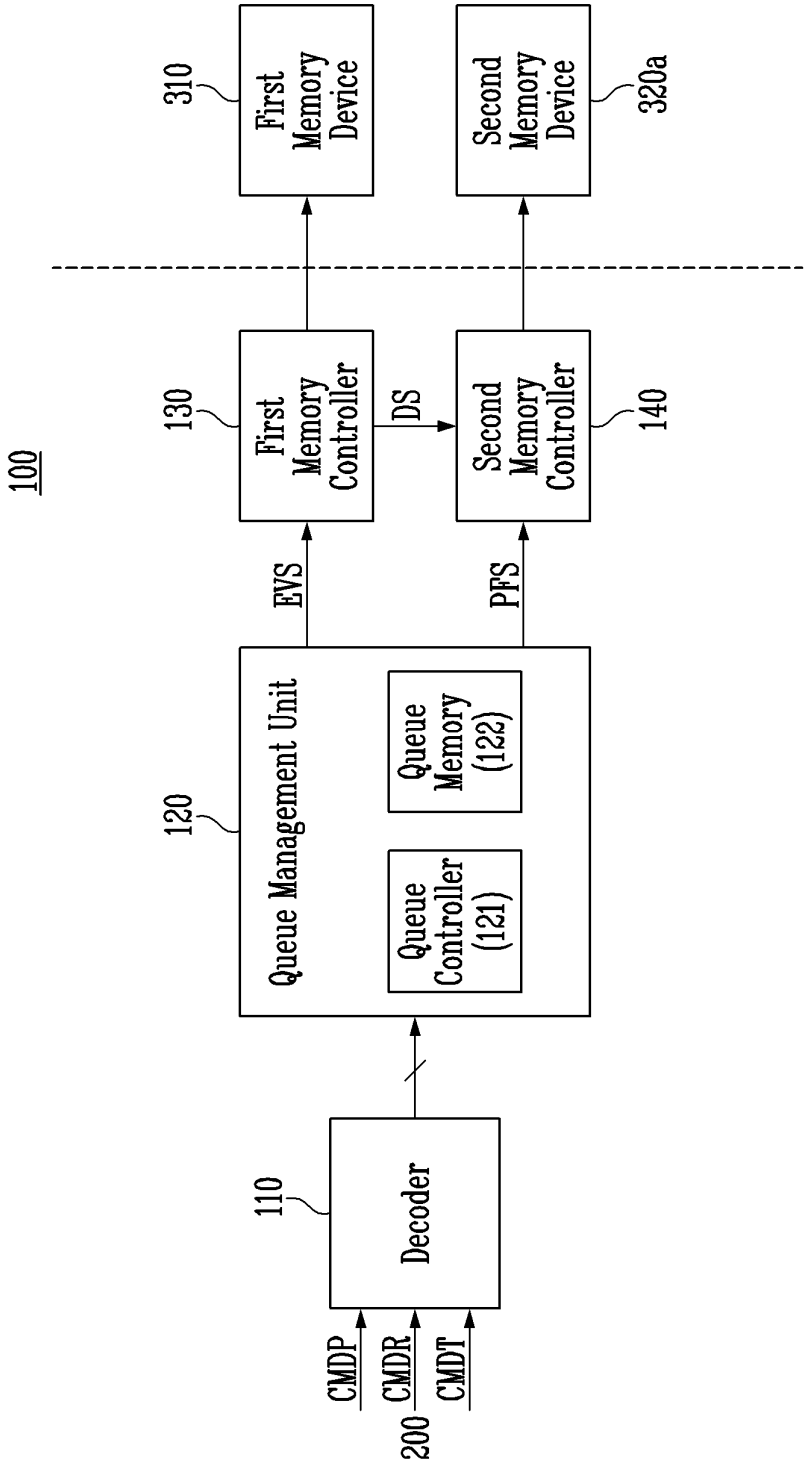
100
200
CMDP
CMDR
CMDT
110
Decoder
120
Queue Management Unit
Queue Controller (121)
Queue Memory (122)
EVS
PFS
130
First Memory Controller
DS
140
Second Memory Controller
310
First Memory Device
320a
Second Memory Device

FIG. 3

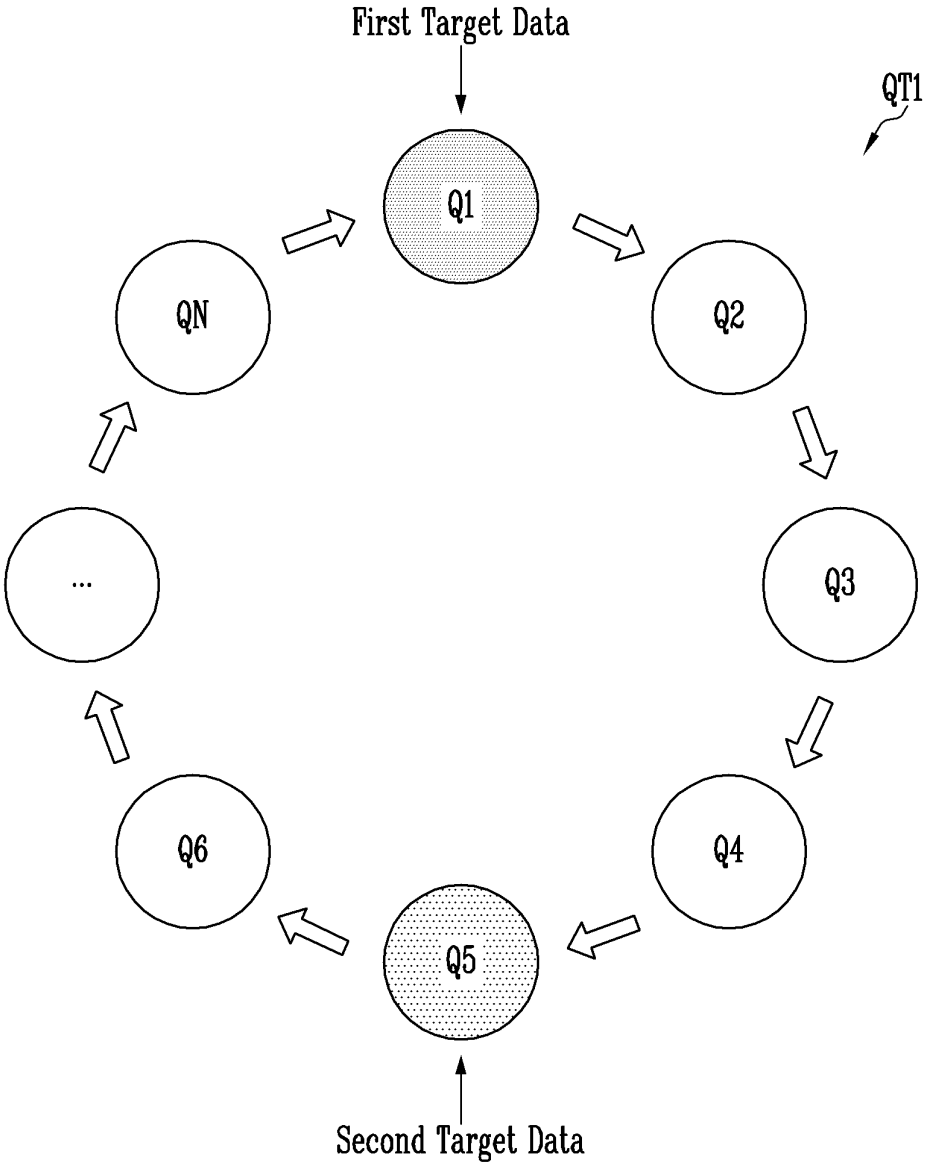

FIG. 4

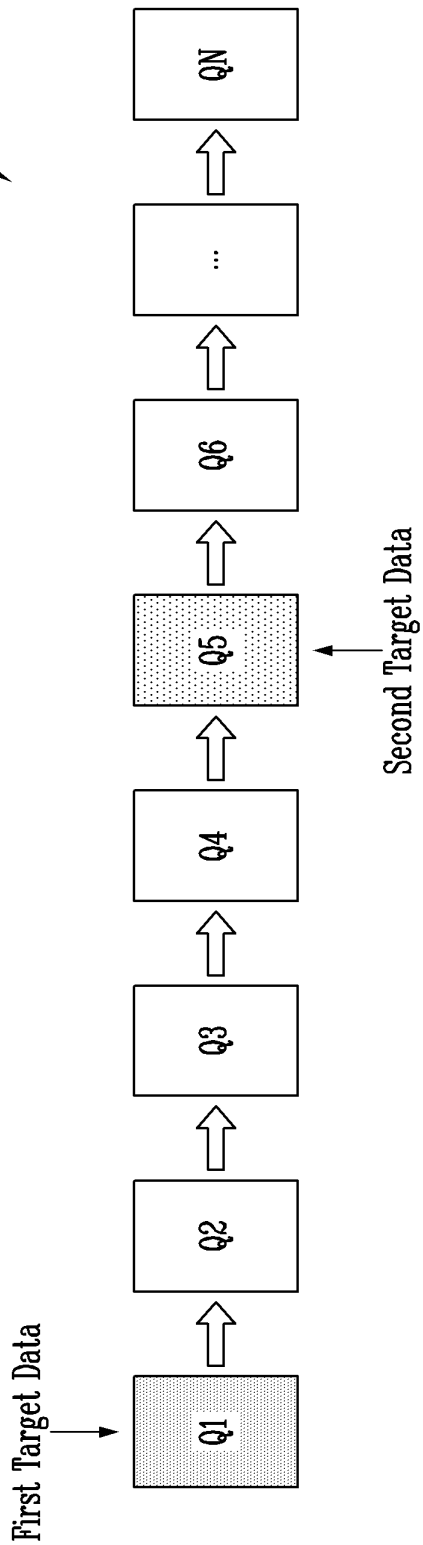

FIG. 5

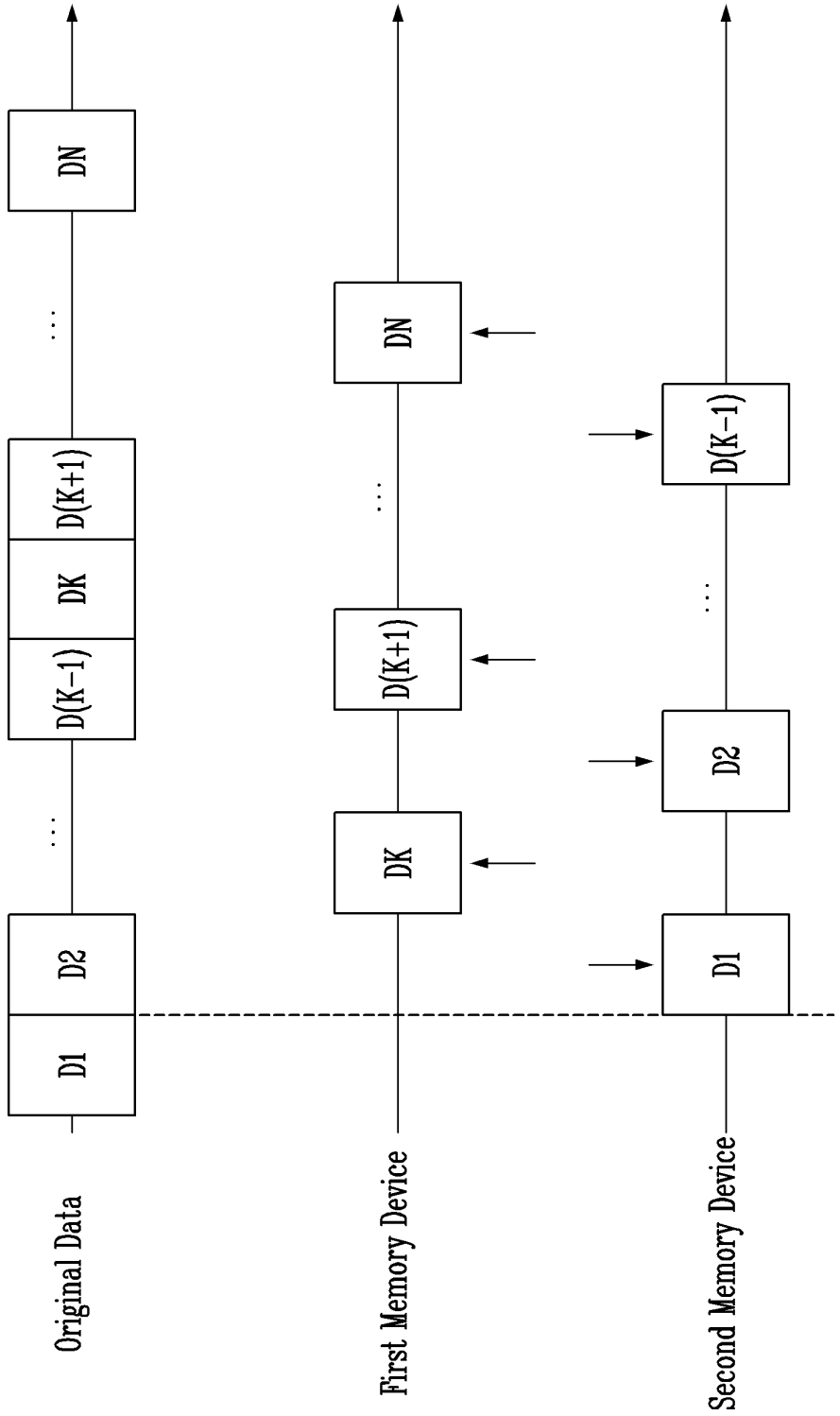
Original Data
D1
D2
...
D(K-1)
DK
D(K+1)
...
DN
First Memory Device
DK
D(K+1)
...
DN
Second Memory Device
D1
D2
...
D(K-1)

FIG. 6

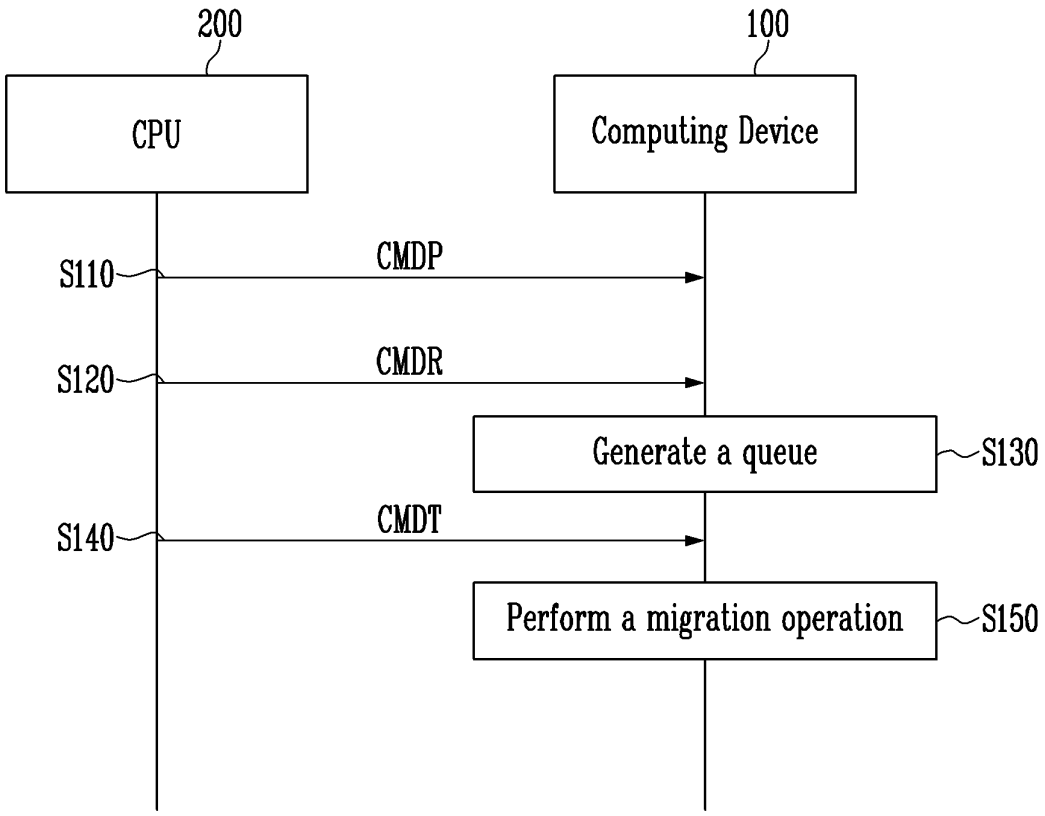
200
100
CPU
Computing Device
S110
CMDP
S120
CMDR
Generate a queue
S130
S140
CMDT
Perform a migration operation
S150

FIG. 7

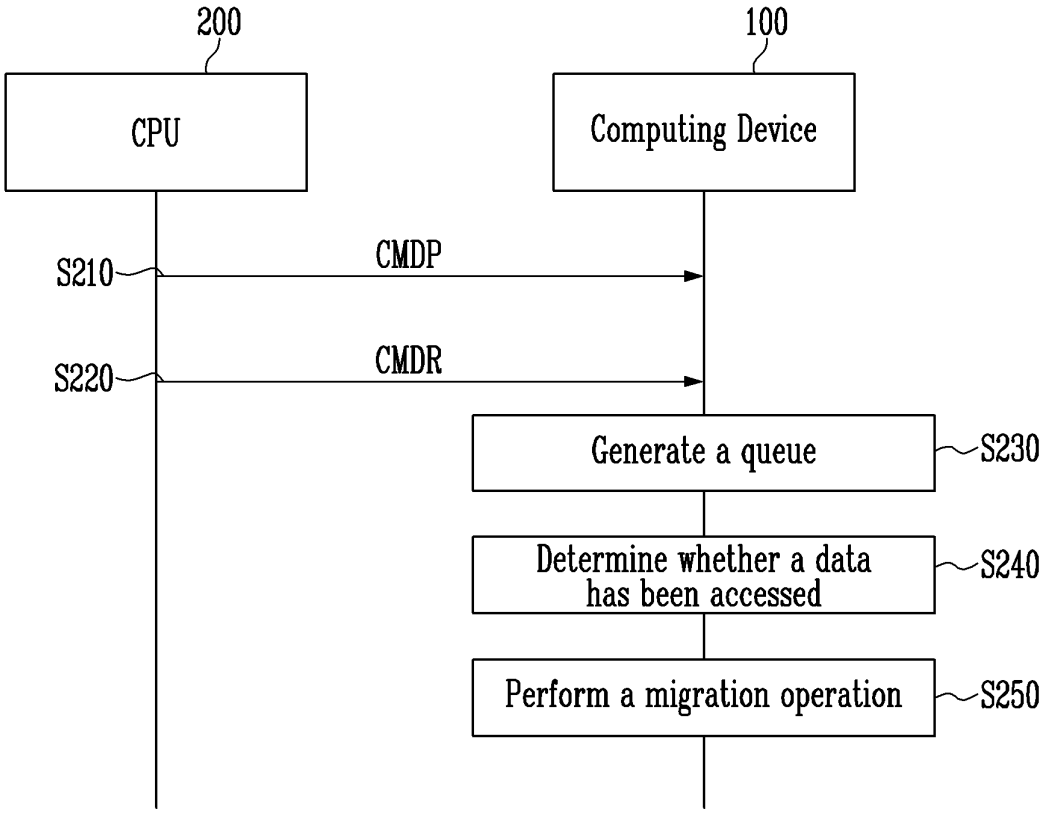
200
100
CPU
Computing Device
S210
CMDP
S220
CMDR
Generate a queue
S230
Determine whether a data has been accessed
S240
Perform a migration operation
S250