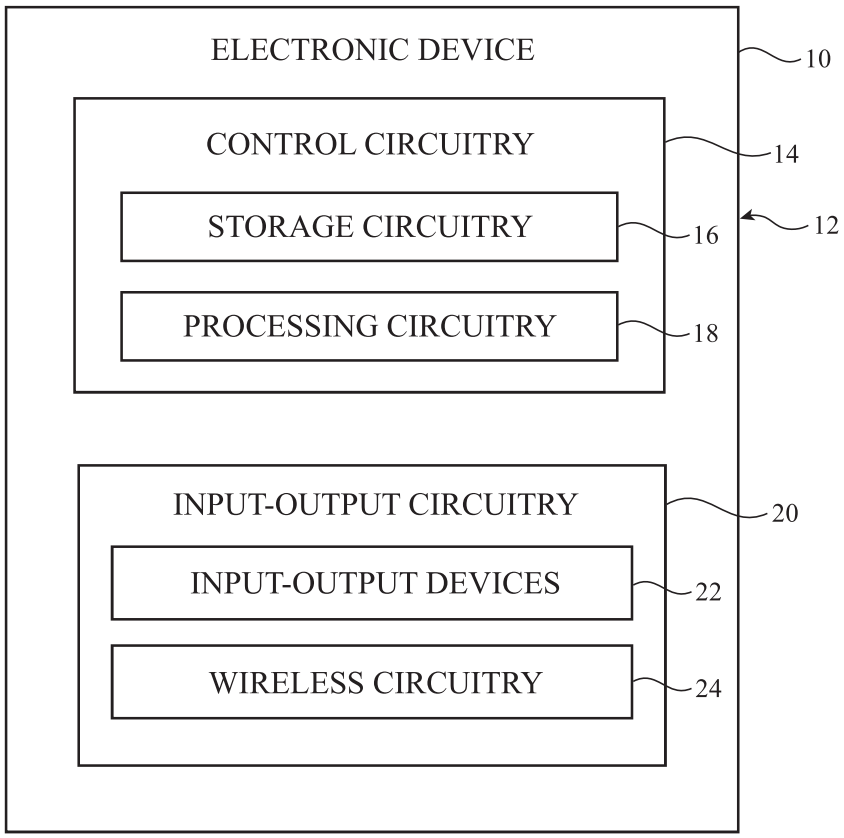
ELECTRONIC DEVICE
10
CONTROL CIRCUITRY
14
STORAGE CIRCUITRY
16
12
PROCESSING CIRCUITRY
18
INPUT-OUTPUT CIRCUITRY
20
INPUT-OUTPUT DEVICES
22
WIRELESS CIRCUITRY
24

FIG. 1

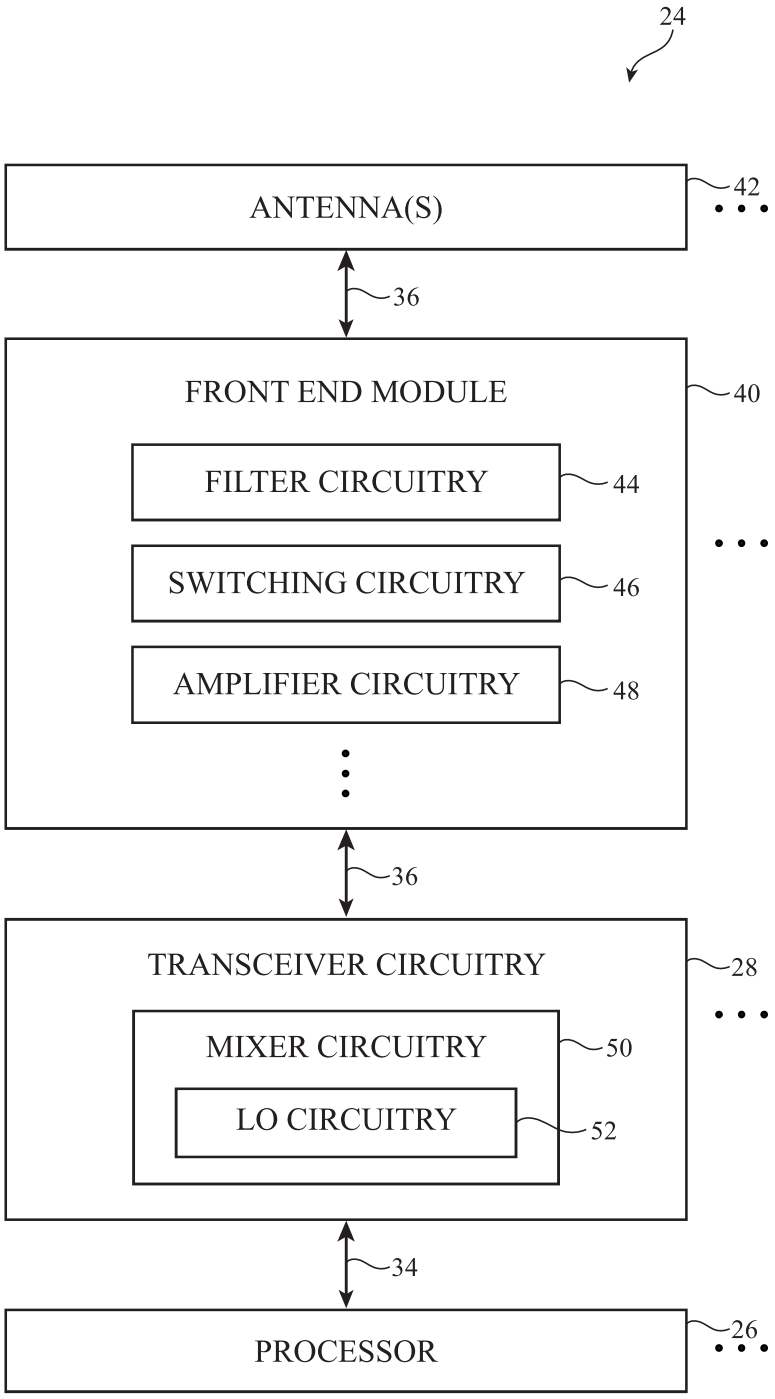
24
ANTENNA(S)
42
36
FRONT END MODULE
40
FILTER CIRCUITRY
44
SWITCHING CIRCUITRY
46
AMPLIFIER CIRCUITRY
48
36
TRANSCEIVER CIRCUITRY
28
MIXER CIRCUITRY
50
LO CIRCUITRY
52
34
PROCESSOR
26

FIG. 2

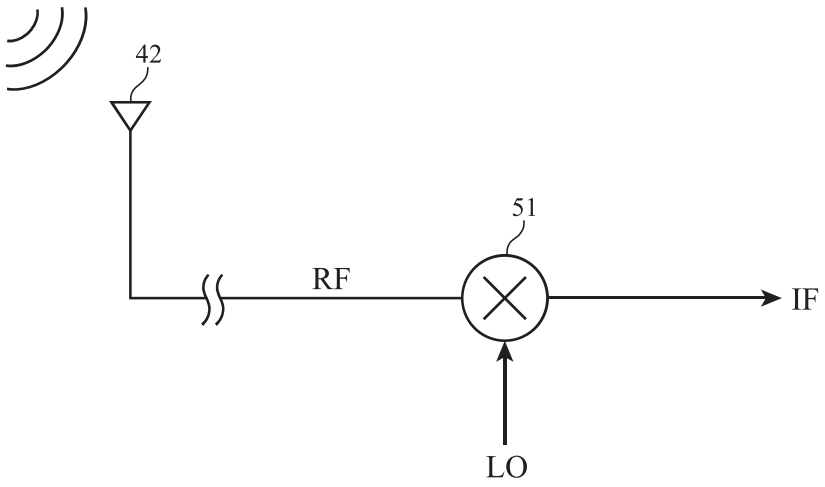
42
51
RF
IF
LO

FIG. 3A

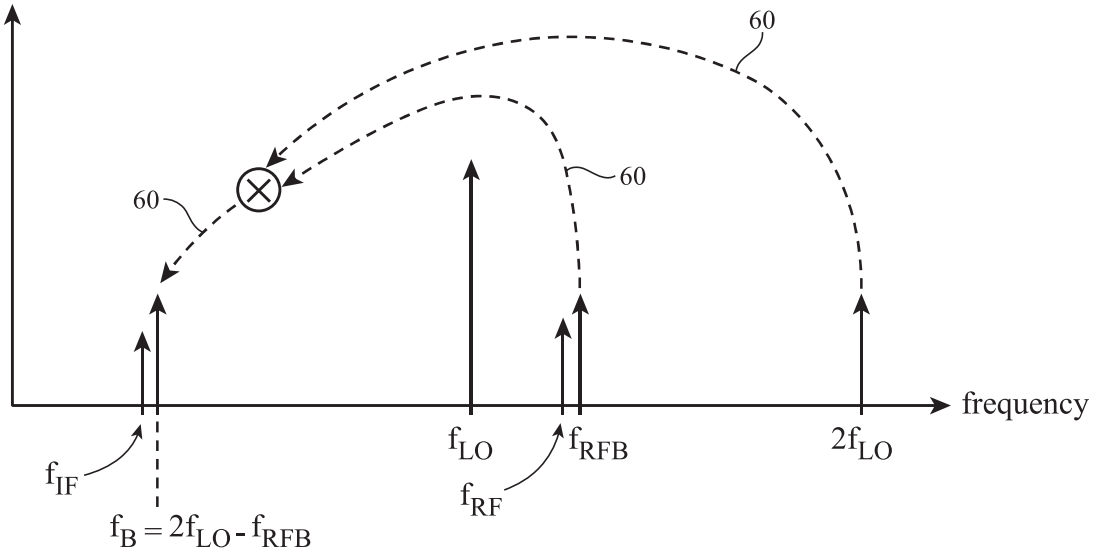
60
60
60
frequency
f_{IF}
$f_B = 2f_{LO} - f_{RFB}$
f_{LO}
f_{RF}
f_{RFB}
$2f_{LO}$

FIG. 3B

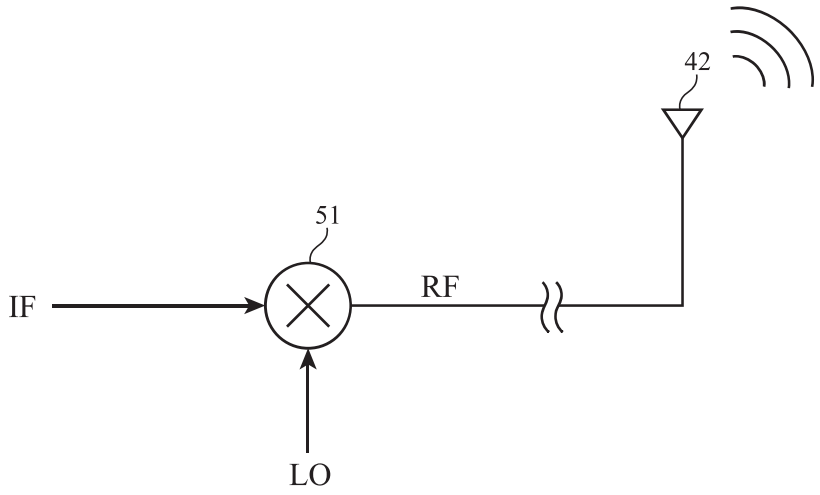
42
51
IF
RF
LO

FIG. 4A

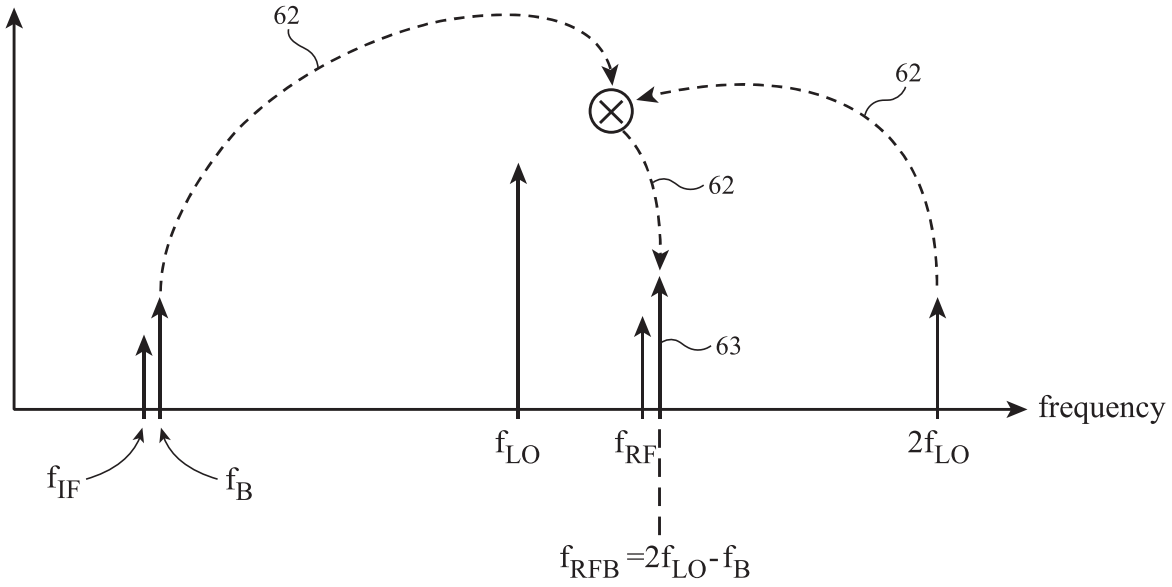
62
62
62
63
frequency
f_{IF}
f_B
f_{LO}
f_{RF}
$2f_{LO}$
$f_{RFB}=2f_{LO}-f_B$

FIG. 4B

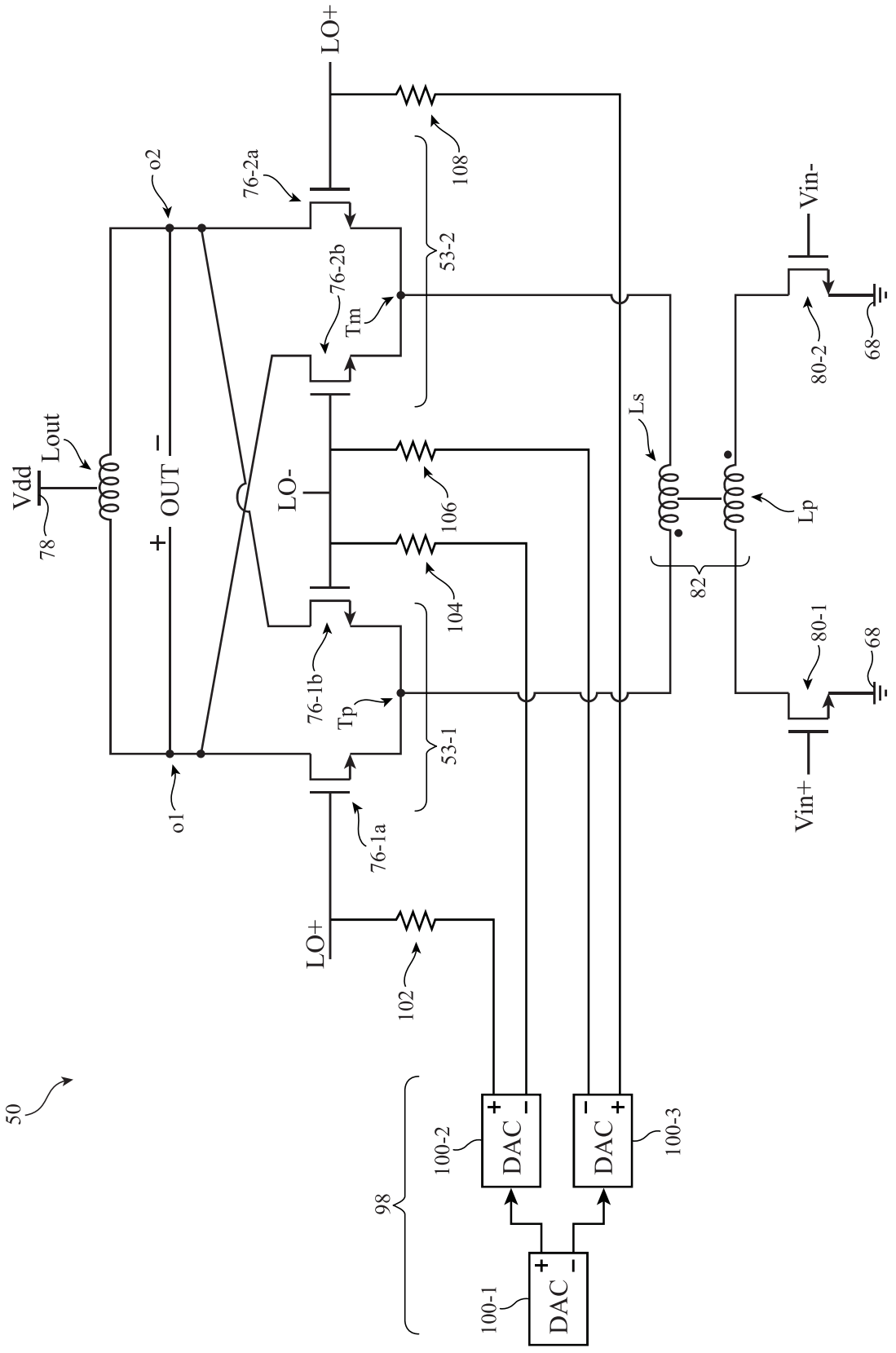
50
98
DAC
100-1
100-2
100-3
102
104
106
108
53-1
53-2
76-1a
76-1b
76-2a
76-2b
Tp
Tm
LO+
LO-
o1
o2
OUT
Vdd
78
Lout
Ls
Lp
82
80-1
80-2
68
Vin+
Vin-

FIG. 5

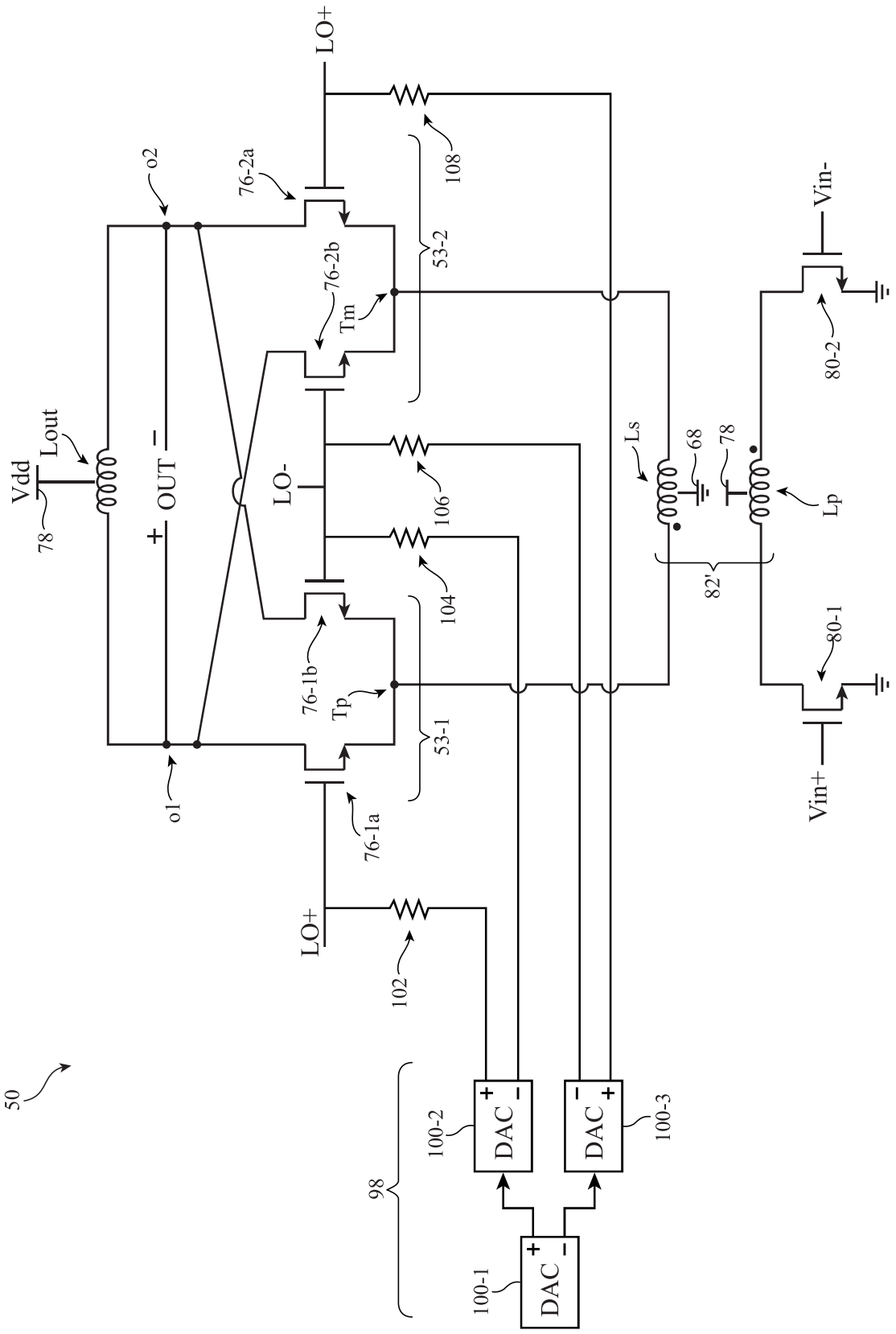
50
Vdd
78
Lout
+ OUT −
o1
o2
LO+
LO-
76-1a
76-1b
Tp
76-2a
76-2b
Tm
53-1
53-2
102
104
106
108
98
100-1
100-2
100-3
DAC
Ls
68
78
Lp
82'
80-1
80-2
Vin+
Vin-

FIG. 6

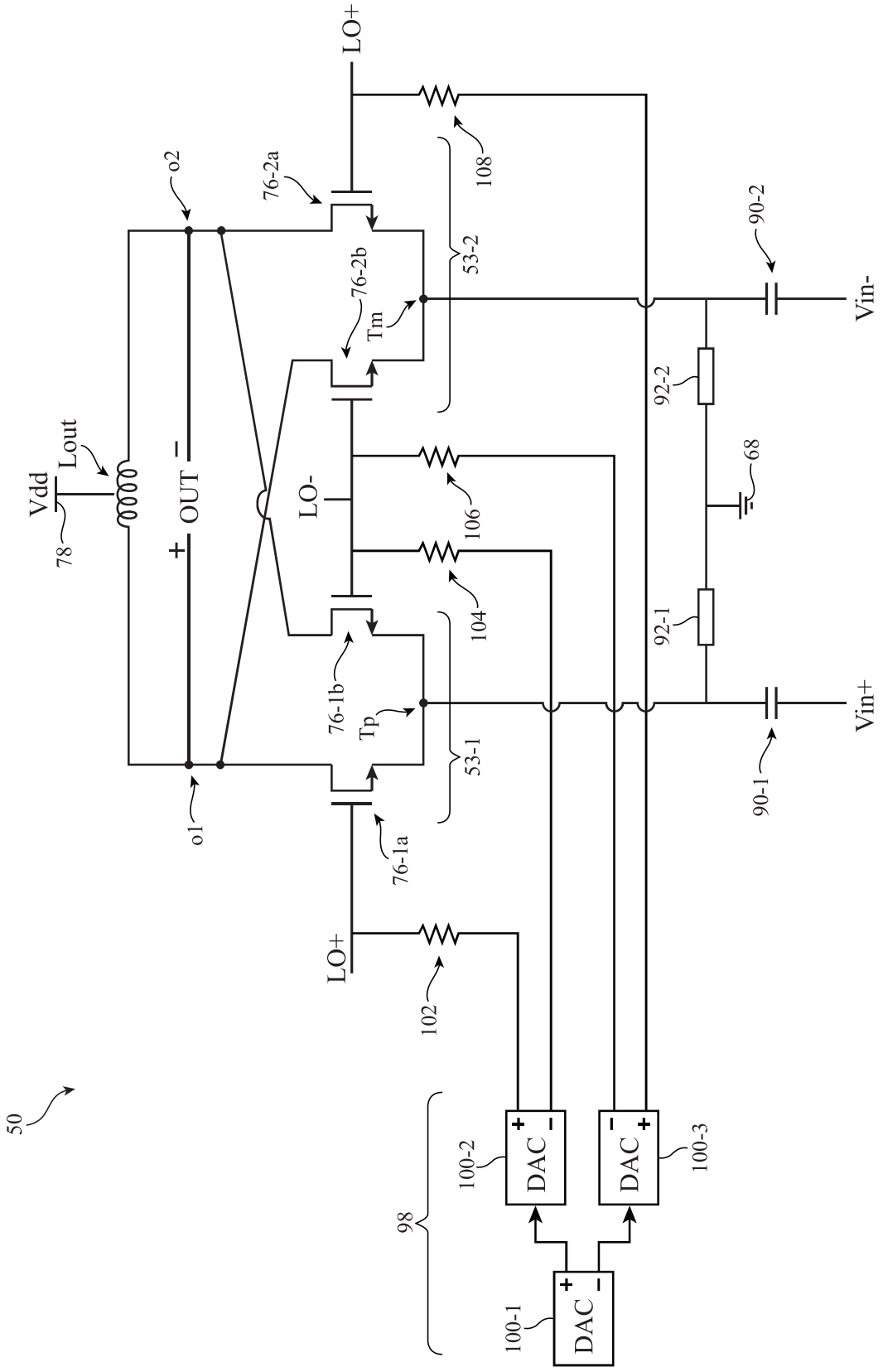
50
98
100-1
DAC
100-2
DAC
100-3
DAC
102
LO+
104
106
LO-
108
LO+
53-1
53-2
76-1a
76-1b
Tp
76-2a
76-2b
Tm
o1
o2
78
Vdd
Lout
OUT
68
92-1
92-2
90-1
90-2
Vin+
Vin-

FIG. 7

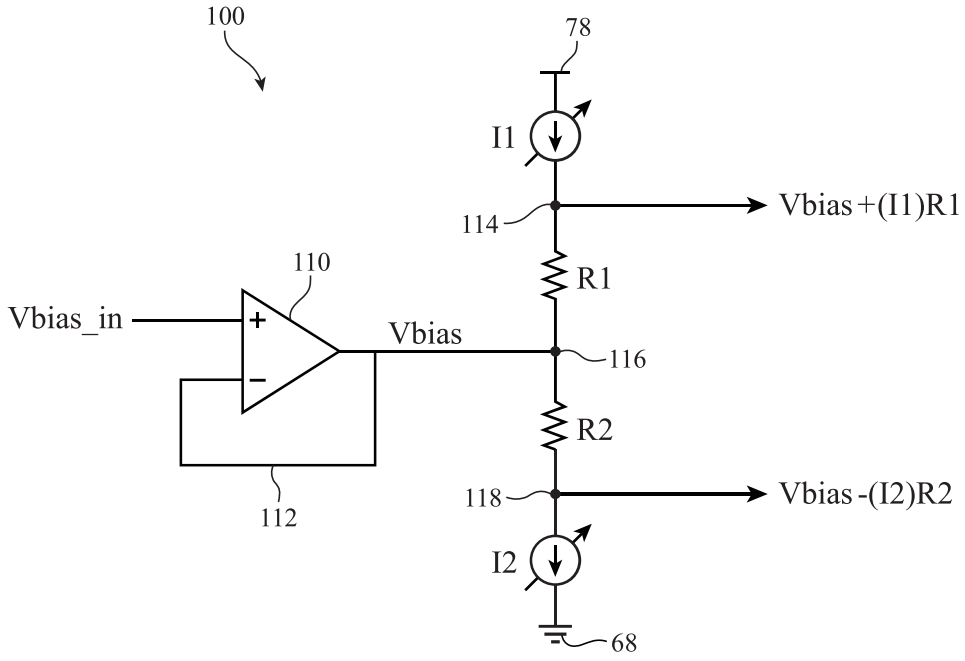
100
78
I1
Vbias+(I1)R1
114
R1
110
Vbias_in
Vbias
116
R2
112
118
Vbias-(I2)R2
I2
68

FIG. 8

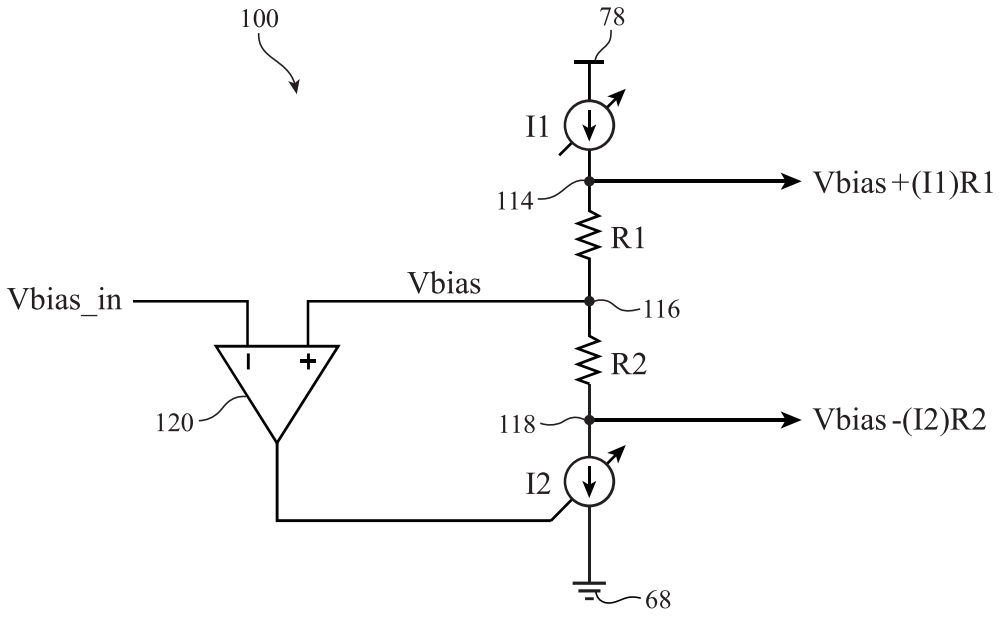
100
78
I1
Vbias+(I1)R1
114
R1
Vbias_in
Vbias
116
R2
120
118
Vbias-(I2)R2
I2
68

FIG. 9

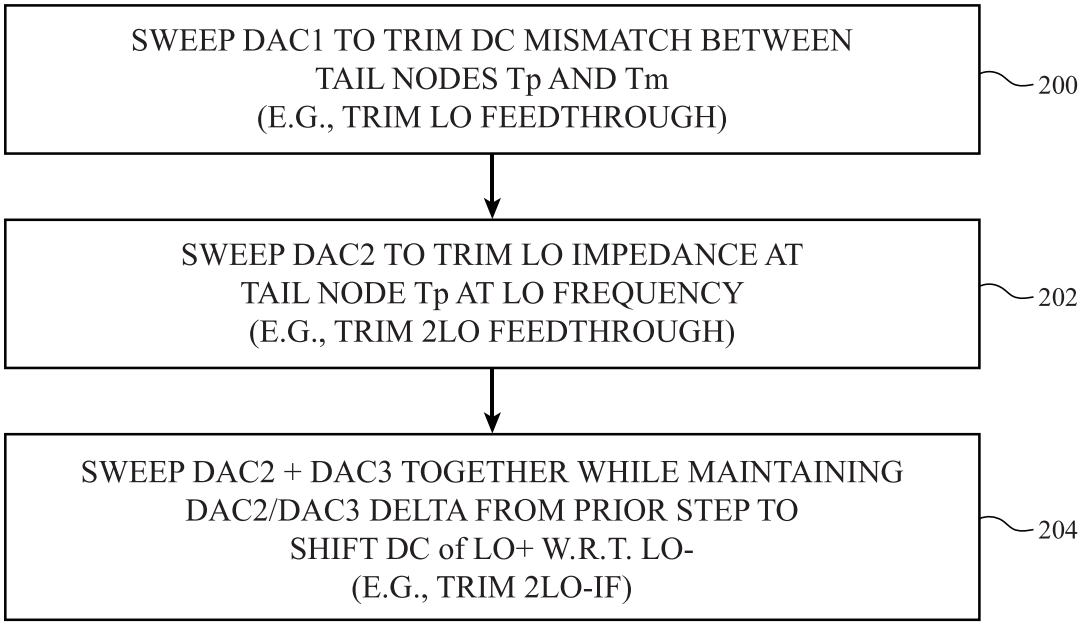
SWEEP DAC1 TO TRIM DC MISMATCH BETWEEN TAIL NODES Tp AND Tm (E.G., TRIM LO FEEDTHROUGH)
200
SWEEP DAC2 TO TRIM LO IMPEDANCE AT TAIL NODE Tp AT LO FREQUENCY (E.G., TRIM 2LO FEEDTHROUGH)
202
SWEEP DAC2 + DAC3 TOGETHER WHILE MAINTAINING DAC2/DAC3 DELTA FROM PRIOR STEP TO SHIFT DC of LO+ W.R.T. LO- (E.G., TRIM 2LO-IF)
204

FIG. 10

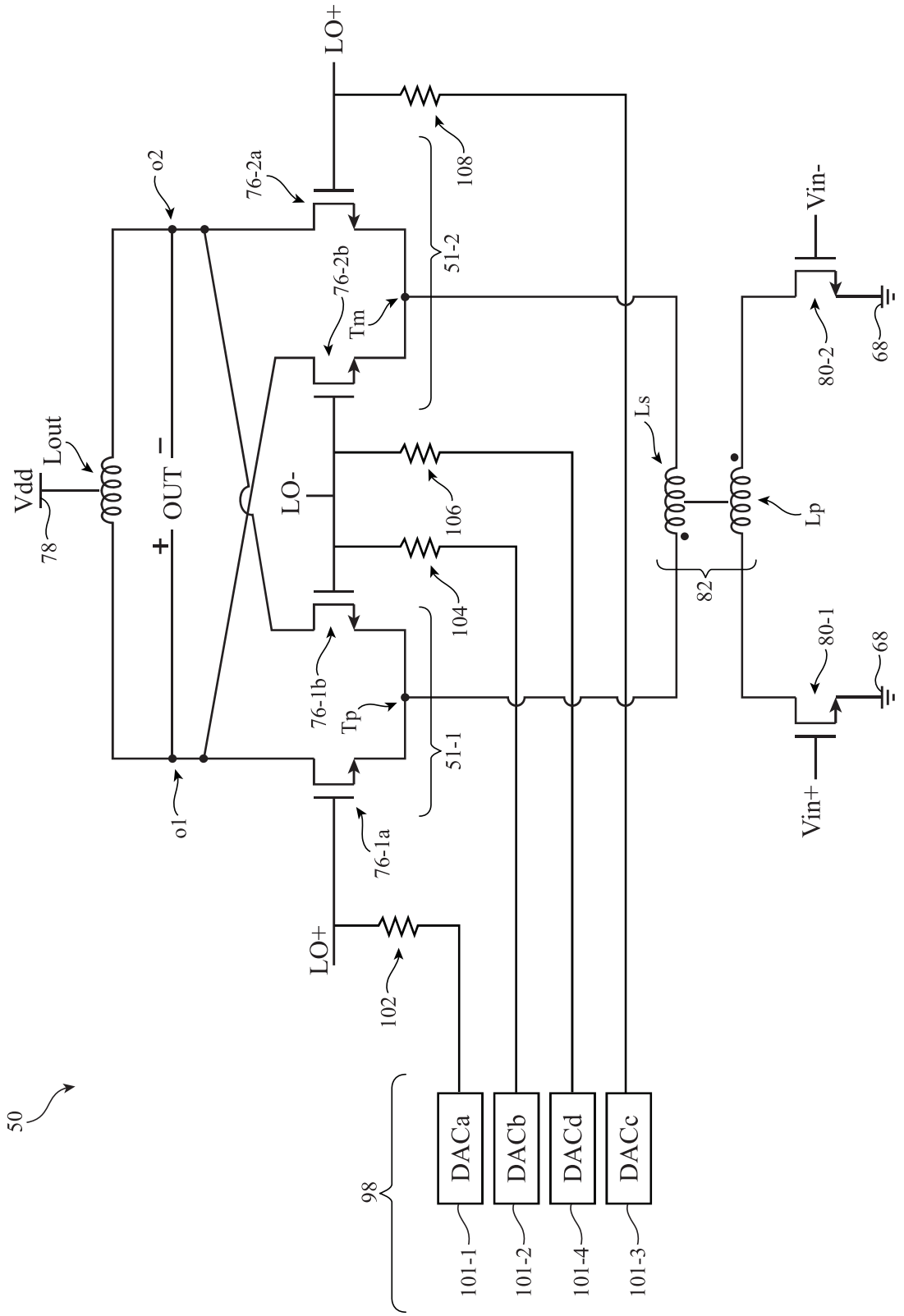
50
98
DACa
DACb
DACd
DACc
101-1
101-2
101-4
101-3
LO+
102
76-1a
o1
76-1b
Tp
51-1
104
LO-
106
76-2b
Tm
51-2
76-2a
o2
108
LO+
Vdd
Lout
78
+ OUT −
Ls
Lp
82
80-1
80-2
68
Vin+
Vin-

FIG. 11

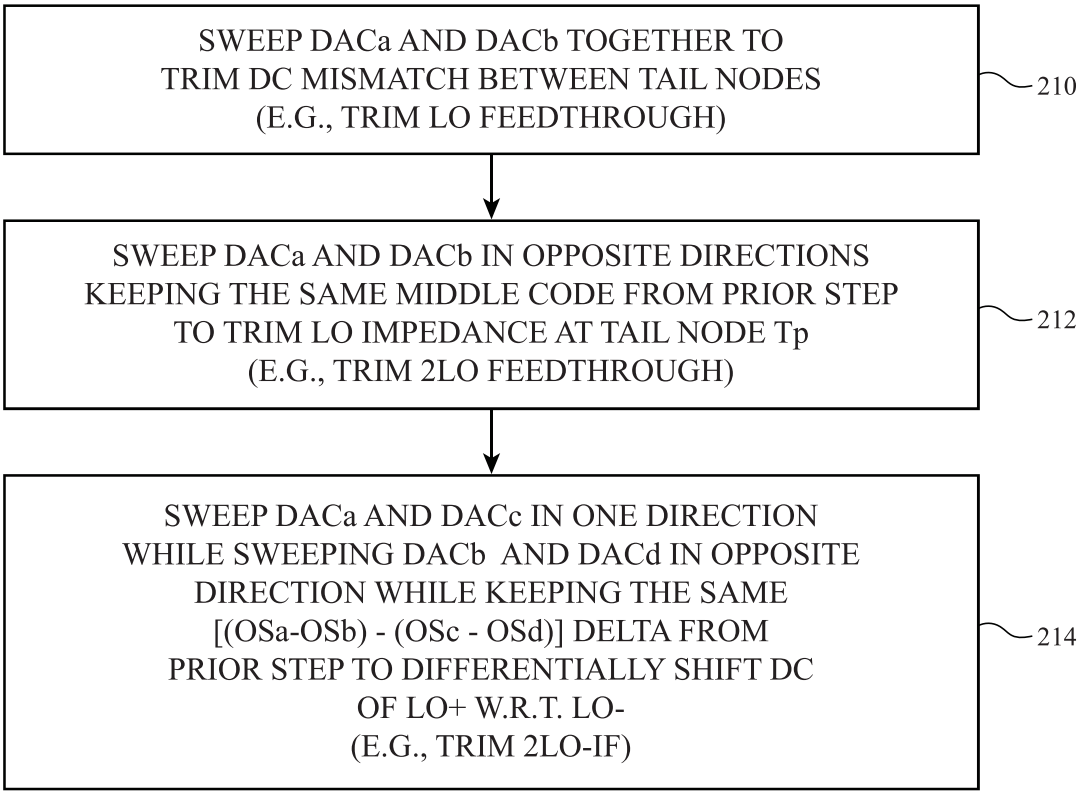
SWEEP DACa AND DACb TOGETHER TO
TRIM DC MISMATCH BETWEEN TAIL NODES
(E.G., TRIM LO FEEDTHROUGH)
210
SWEEP DACa AND DACb IN OPPOSITE DIRECTIONS
KEEPING THE SAME MIDDLE CODE FROM PRIOR STEP
TO TRIM LO IMPEDANCE AT TAIL NODE Tp
(E.G., TRIM 2LO FEEDTHROUGH)
212
SWEEP DACa AND DACc IN ONE DIRECTION
WHILE SWEEPING DACb AND DACd IN OPPOSITE
DIRECTION WHILE KEEPING THE SAME
[(OSa-OSb) - (OSc - OSd)] DELTA FROM
PRIOR STEP TO DIFFERENTIALLY SHIFT DC
OF LO+ W.R.T. LO-
(E.G., TRIM 2LO-IF)
214

FIG. 12