(12) INTERNATIONAL APPLICATION PUBLISHED UNDER THE PATENT COOPERATION TREATY (PCT)

(19) World Intellectual Property Organization
International Bureau

(43) International Publication Date
16 February 2023 (16.02.2023)

WIPO | PCT

(10) International Publication Number
WO 2023/018793 A1

(51) International Patent Classification:
A61M 60/13 (2021.01) *A61M 60/422* (2021.01)
A61M 60/221 (2021.01) *A61M 60/878* (2021.01)
A61M 60/416 (2021.01)

(21) International Application Number:
PCT/US2022/039947

(22) International Filing Date:
10 August 2022 (10.08.2022)

(25) Filing Language: English

(26) Publication Language: English

(30) Priority Data:
63/232,323 12 August 2021 (12.08.2021) US

(71) Applicant: **ABIOMED, INC.** [US/US]; 22 Cherry Hill Drive, Danvers, MA 01923 (US).

(72) Inventors; and
(71) Applicants: **JAHANGIR, Emilia** [US/US]; c/o Abiomed, Inc., 22 Cherry Hill Drive, Danvers, MA 01923 (US). **KONG, Qingchao** [US/US]; c/o Abiomed, Inc., 22 Cherry Hill Drive, Danvers, MA 01923 (US). **KORTYKA, Martin** [US/US]; c/o Abiomed, Inc., 22 Cherry Hill Drive, Danvers, MA 01923 (US).

(74) Agent: **BOTOS, Richard, J.** et al.; Botos Churchill IP Law LLP, 430 Mountain Ave., Suite 401, New Providence, NJ 07974 (US).

(81) Designated States *(unless otherwise indicated, for every kind of national protection available)*: AE, AG, AL, AM, AO, AT, AU, AZ, BA, BB, BG, BH, BN, BR, BW, BY, BZ, CA, CH, CL, CN, CO, CR, CU, CV, CZ, DE, DJ, DK, DM, DO, DZ, EC, EE, EG, ES, FI, GB, GD, GE, GH, GM, GT, HN, HR, HU, ID, IL, IN, IQ, IR, IS, IT, JM, JO, JP, KE, KG, KH, KN, KP, KR, KW, KZ, LA, LC, LK, LR, LS, LU, LY, MA, MD, ME, MG, MK, MN, MW, MX, MY, MZ, NA, NG, NI, NO, NZ, OM, PA, PE, PG, PH, PL, PT, QA, RO, RS, RU, RW, SA, SC, SD, SE, SG, SK, SL, ST, SV, SY, TH, TJ, TM, TN, TR, TT, TZ, UA, UG, US, UZ, VC, VN, WS, ZA, ZM, ZW.

(84) Designated States *(unless otherwise indicated, for every kind of regional protection available)*: ARIPO (BW, GH, GM, KE, LR, LS, MW, MZ, NA, RW, SD, SL, ST, SZ, TZ, UG, ZM, ZW), Eurasian (AM, AZ, BY, KG, KZ, RU, TJ, TM), European (AL, AT, BE, BG, CH, CY, CZ, DE, DK, EE, ES, FI, FR, GB, GR, HR, HU, IE, IS, IT, LT, LU, LV, MC, MK, MT, NL, NO, PL, PT, RO, RS, SE, SI, SK, SM, TR), OAPI (BF, BJ, CF, CG, CI, CM, GA, GN, GQ, GW, KM, ML, MR, NE, SN, TD, TG).

(54) Title: MOTOR CABLES FOR INTRAVASCULAR BLOOD PUMPS

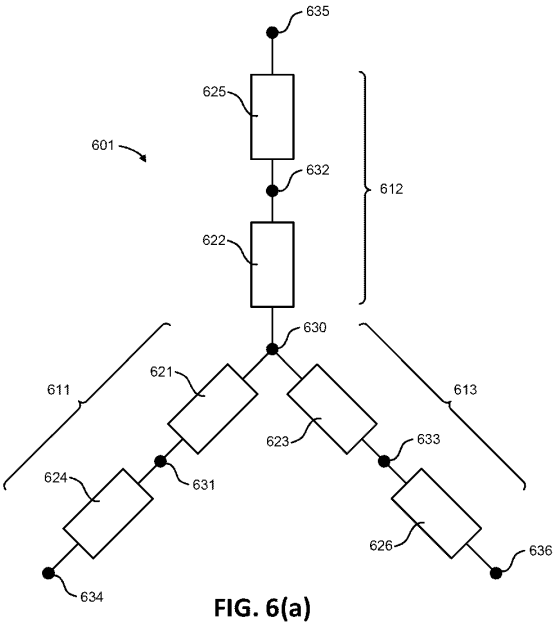

FIG. 6(a)

(57) Abstract: Systems and methods for providing hemodynamic support to a patient with an intravascular blood pump are disclosed. In some implementations, the blood pump includes a motor and an improved motor cable for delivering electrical power to the motor. The motor includes a stator with one or more coils. The motor cable includes one or more electrical conduits. The motor cable also includes a tail portion and a head portion. In some implementations, the head portion may have an O-shape or a C-shape. The motor cable may reduce the complexity of assembling the blood pump. For example, the motor cable may reduce the risk of shorting the one or more coils and/or the one or more electrical conduits.

WO 2023/018793 A1

[Continued on next page]

Published:
— *with international search report (Art. 21(3))*