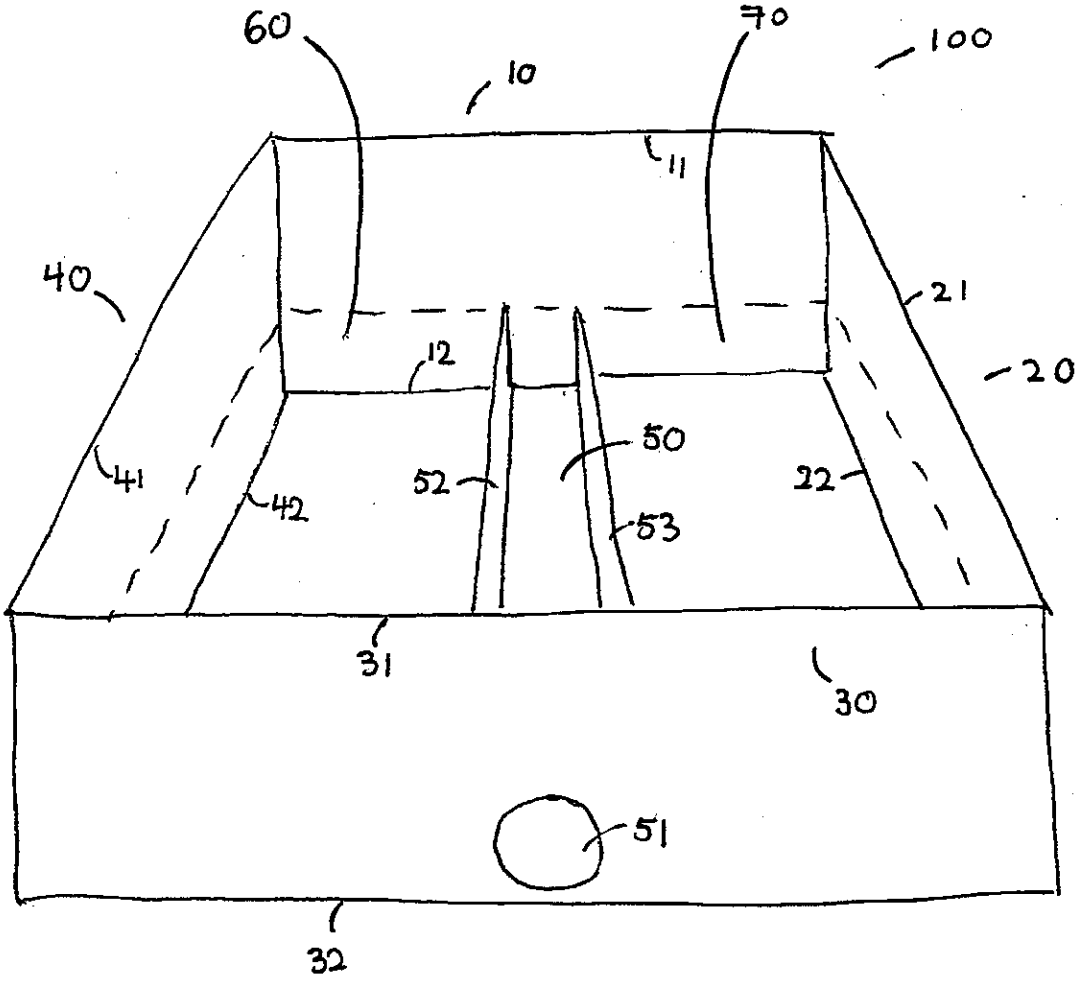

FIGURE 1

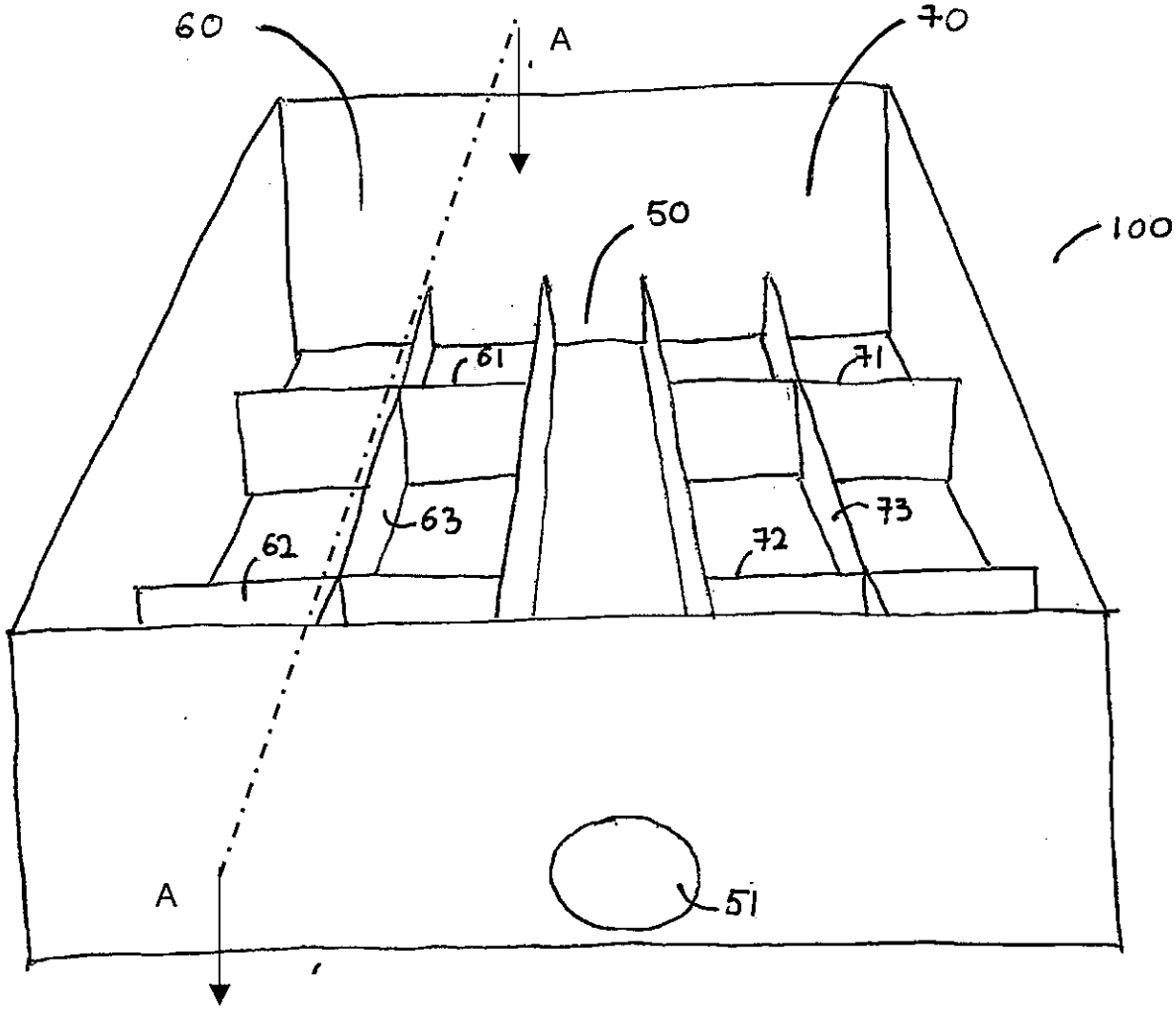

FIGURE 2

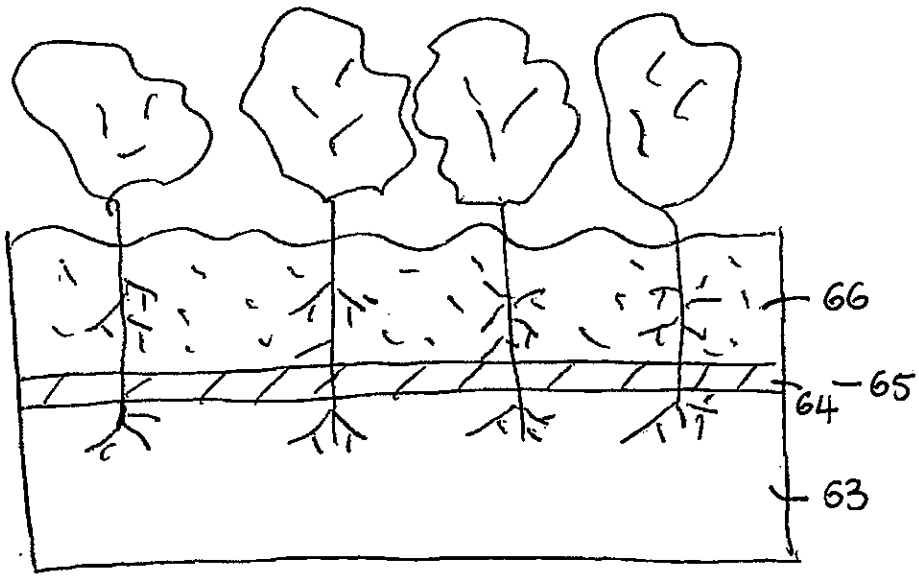

FIGURE 3

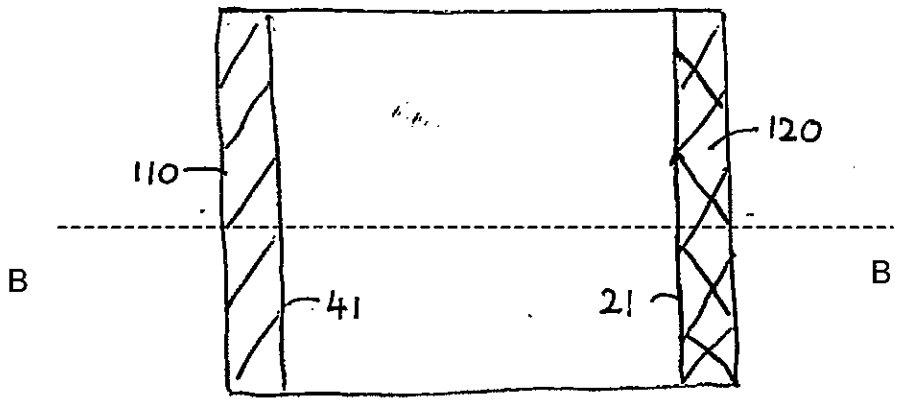

FIGURE 4A

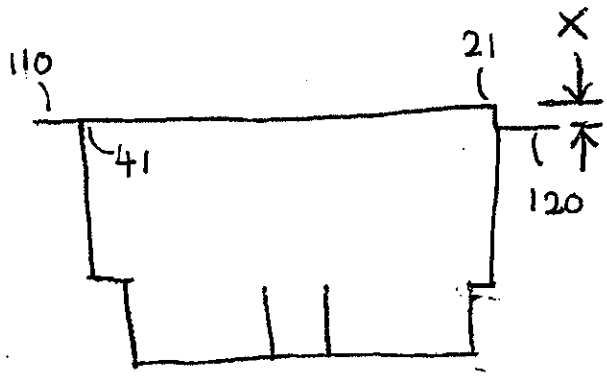

FIGURE 4B

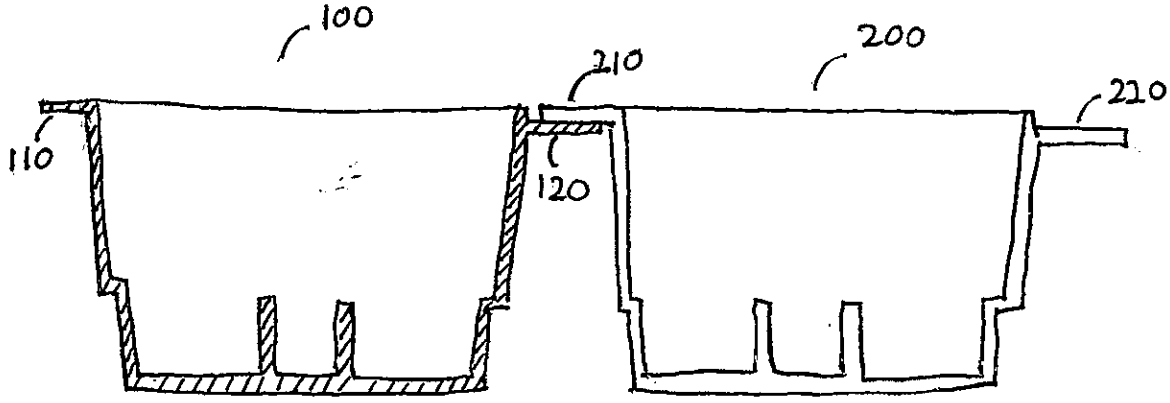

FIGURE 4C

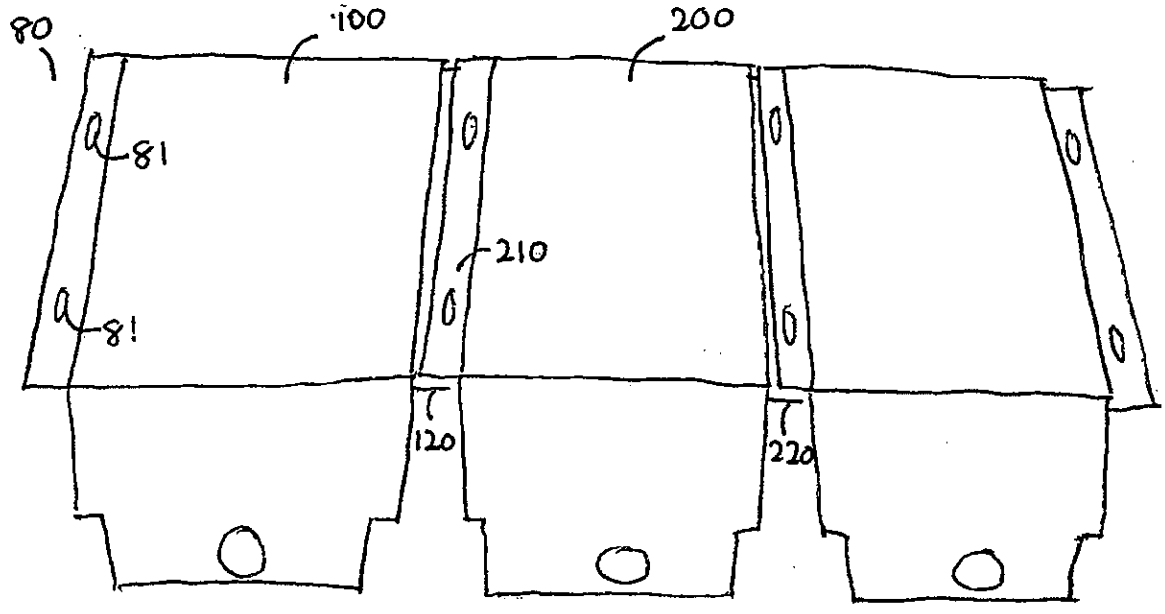

FIGURE 4D

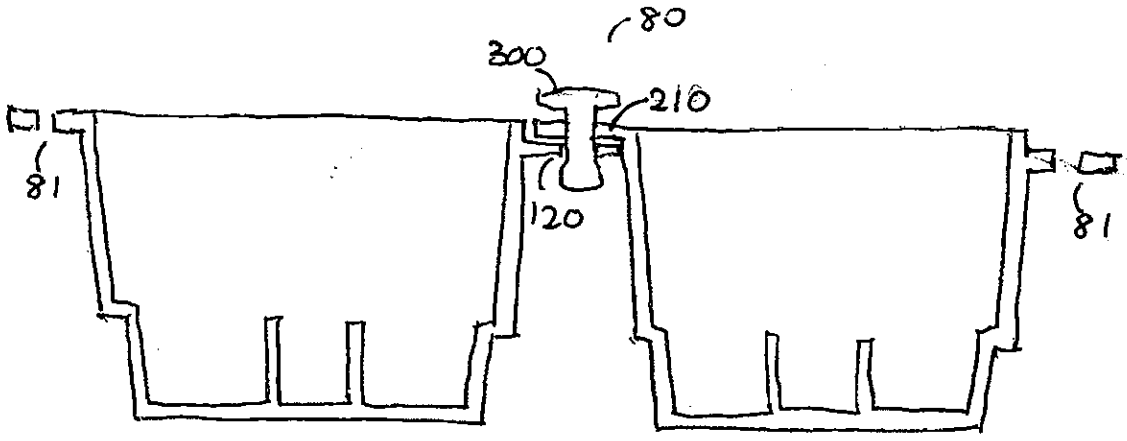

FIGURE 4E

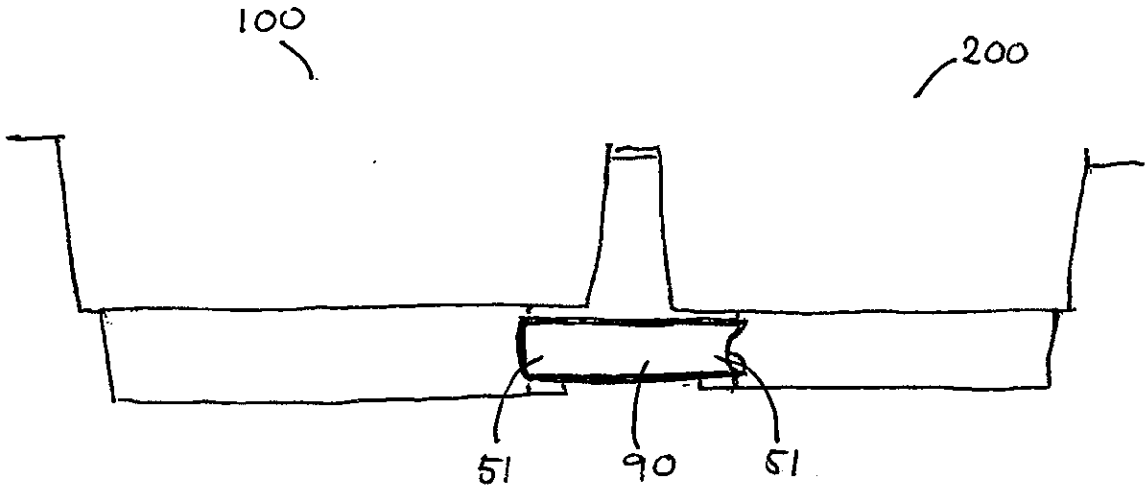

FIGURE 5

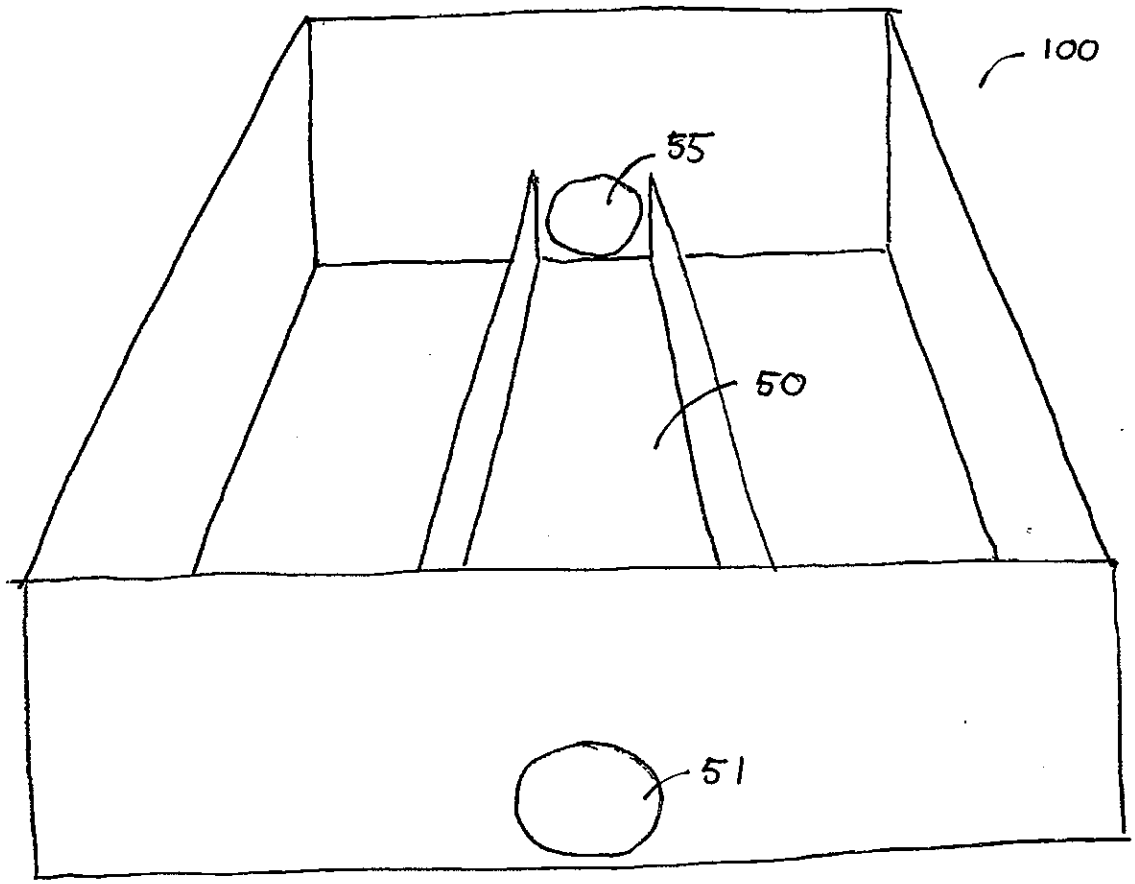

FIGURE 6

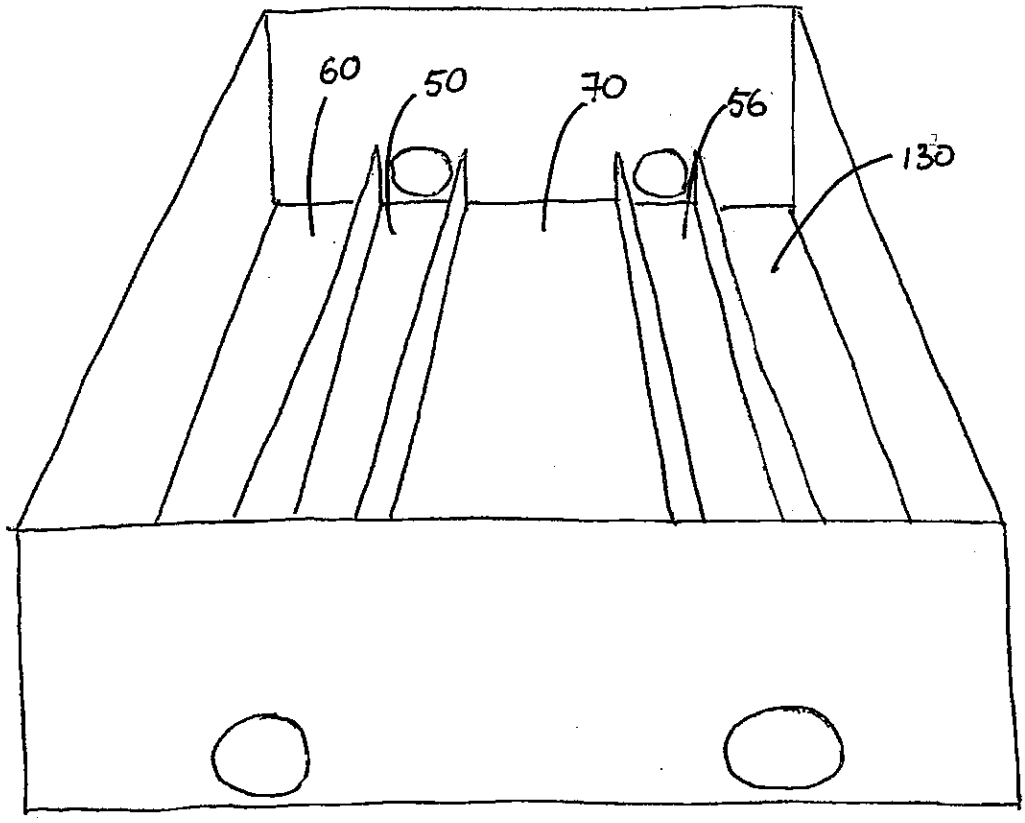

FIGURE 7A

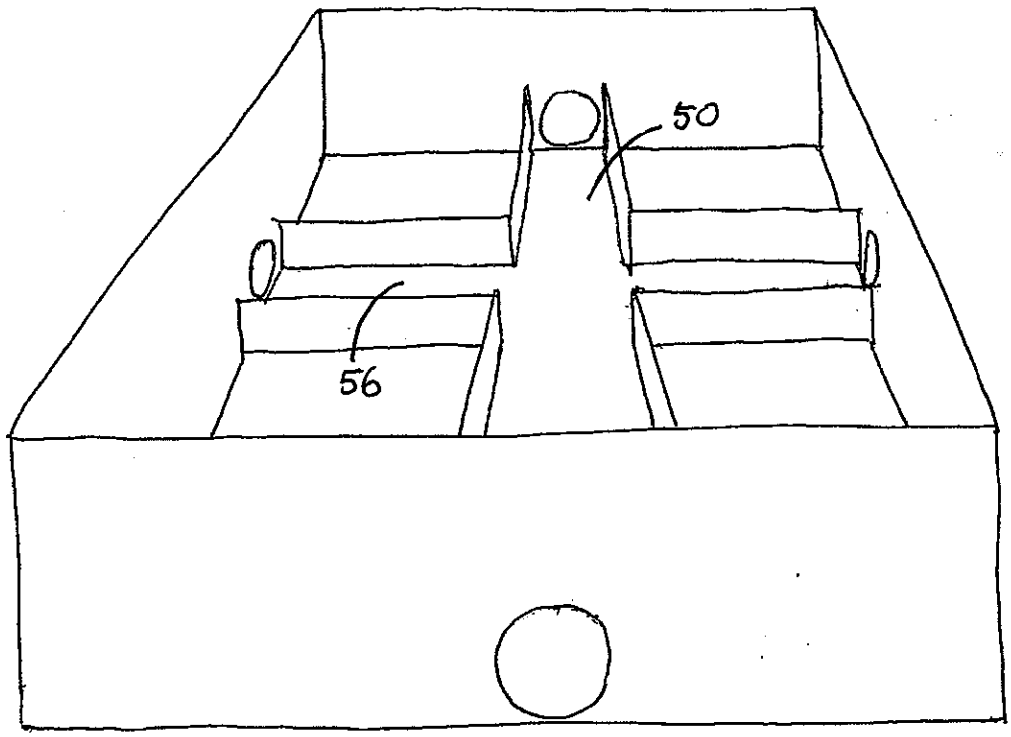

FIGURE 7B

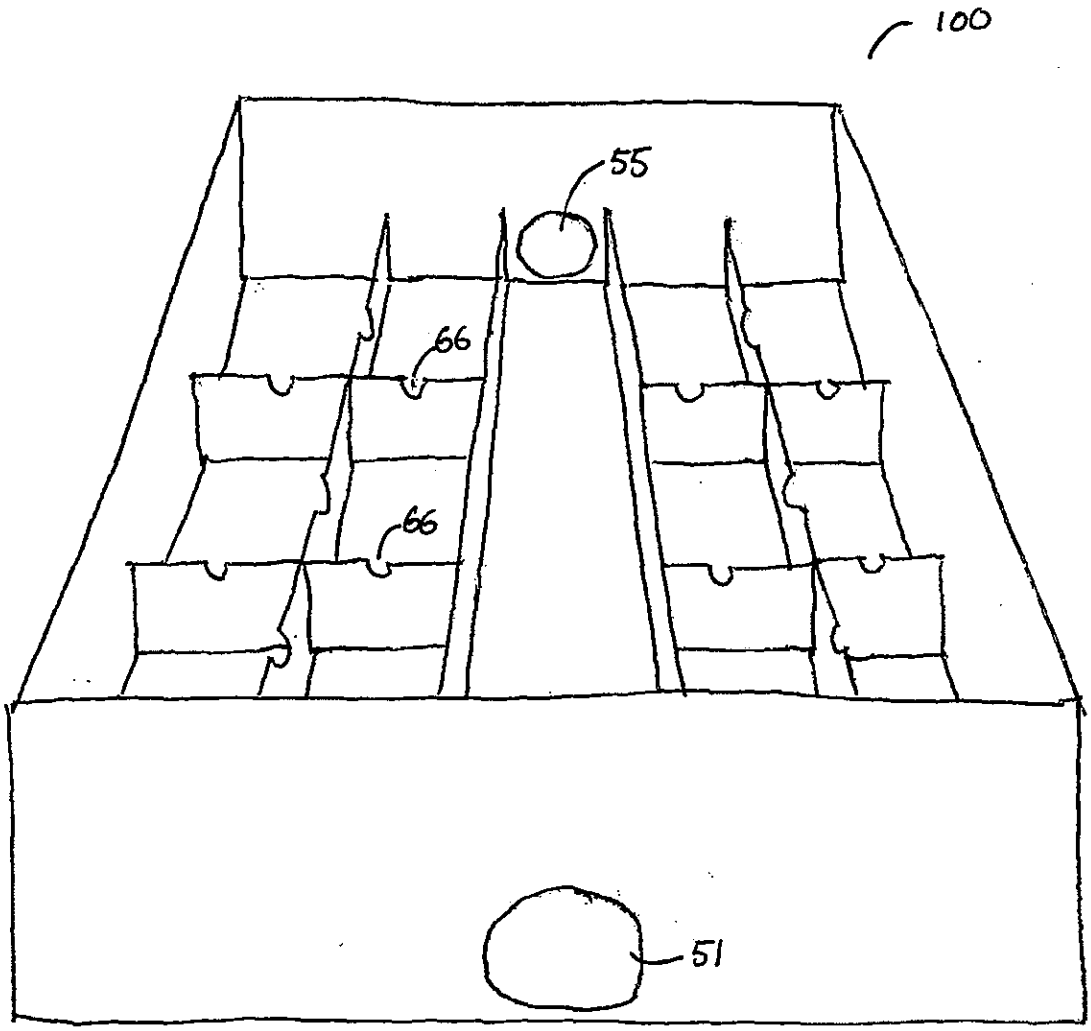

FIGURE 8

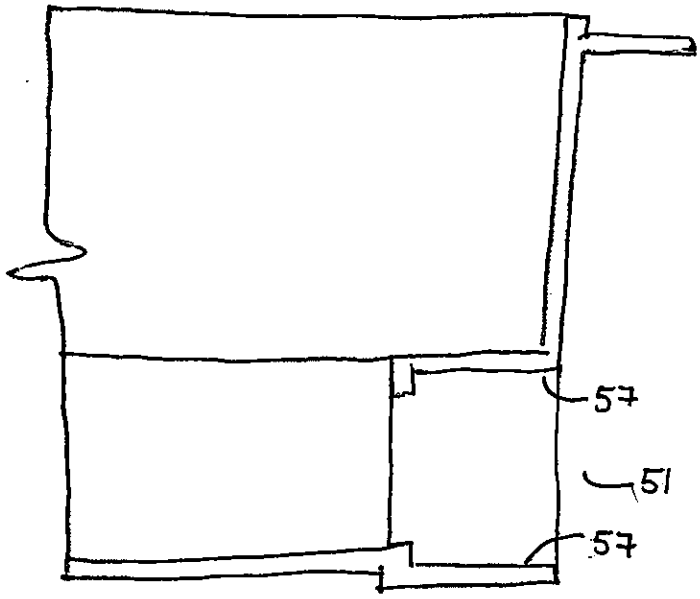

FIGURE 9A

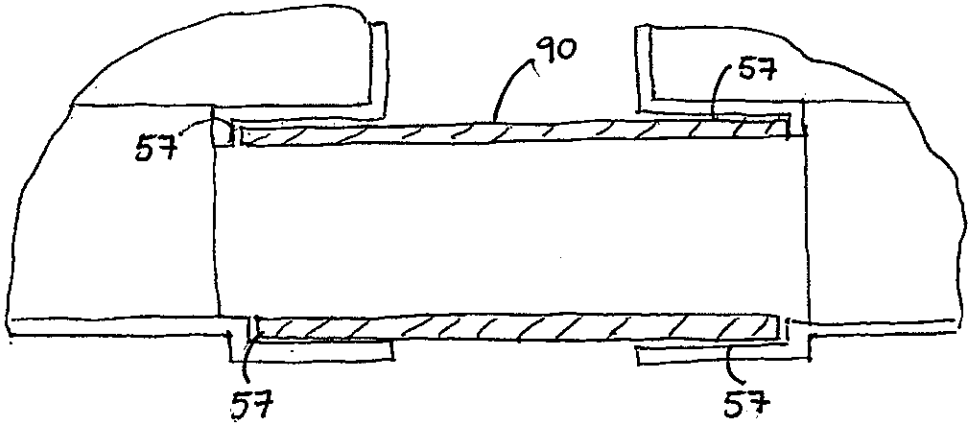

FIGURE 9B

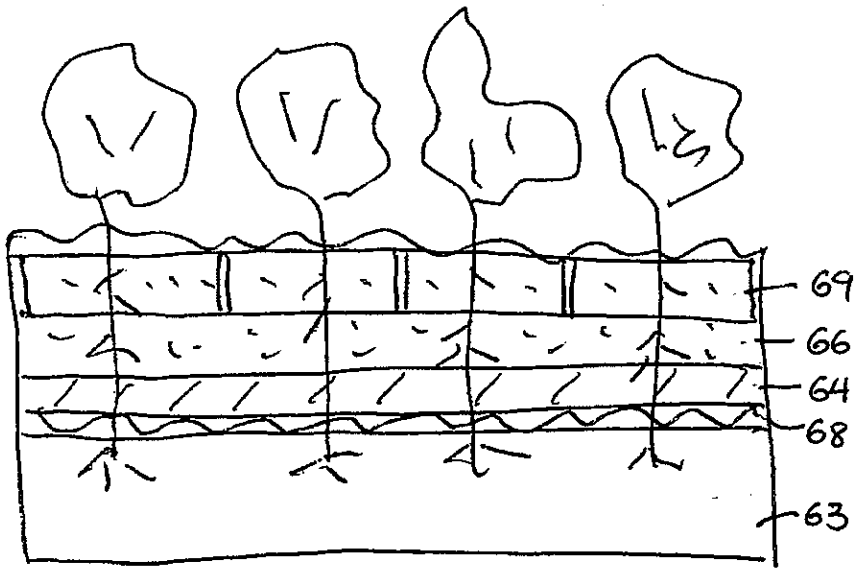

FIGURE 10A

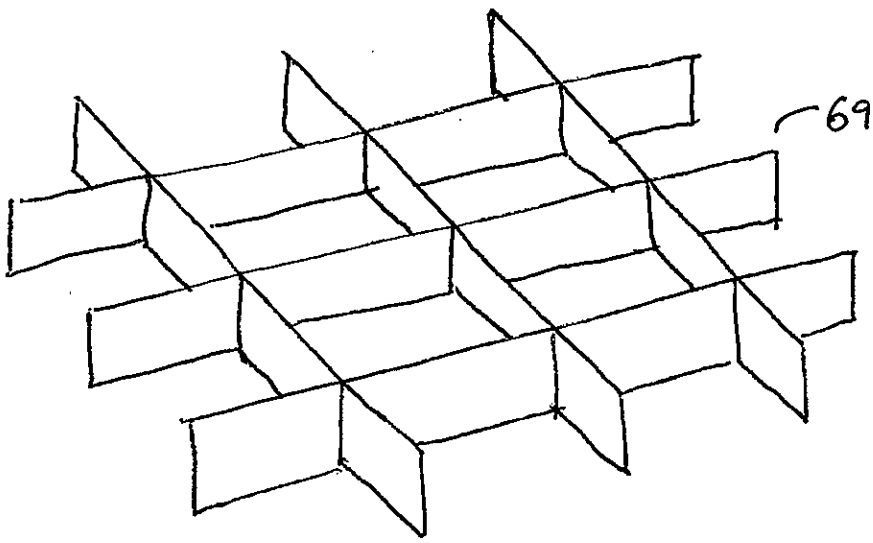

FIGURE 10B

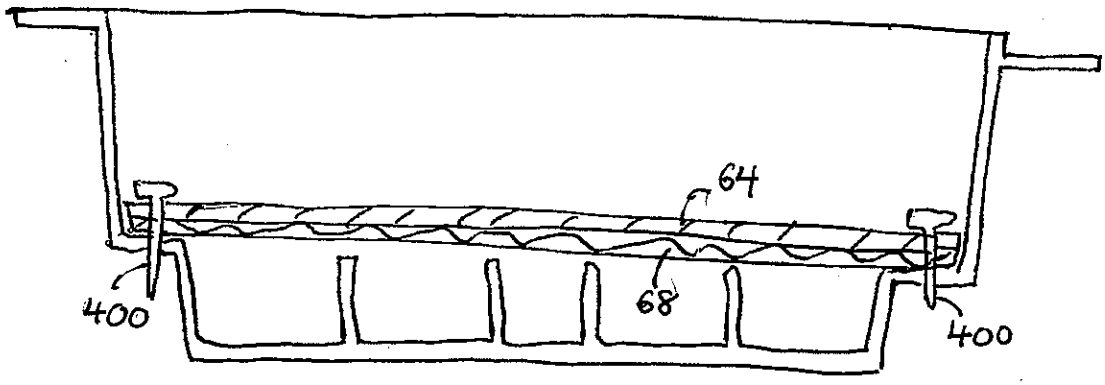

FIGURE 10C

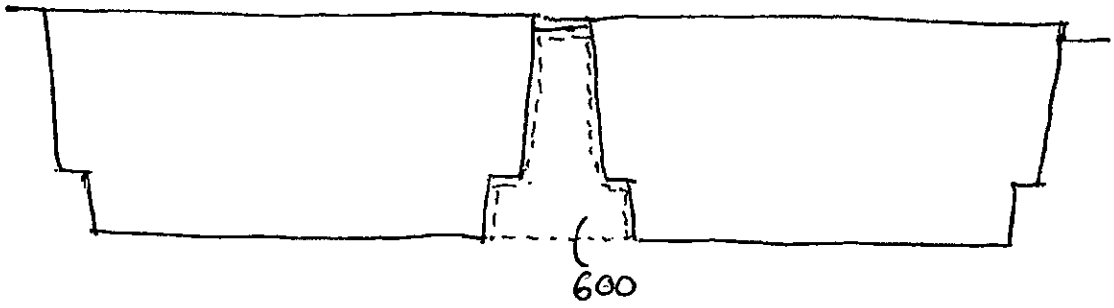

FIGURE 10D

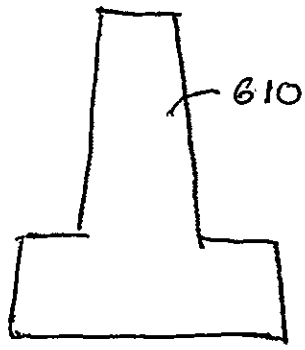

FIGURE 10E

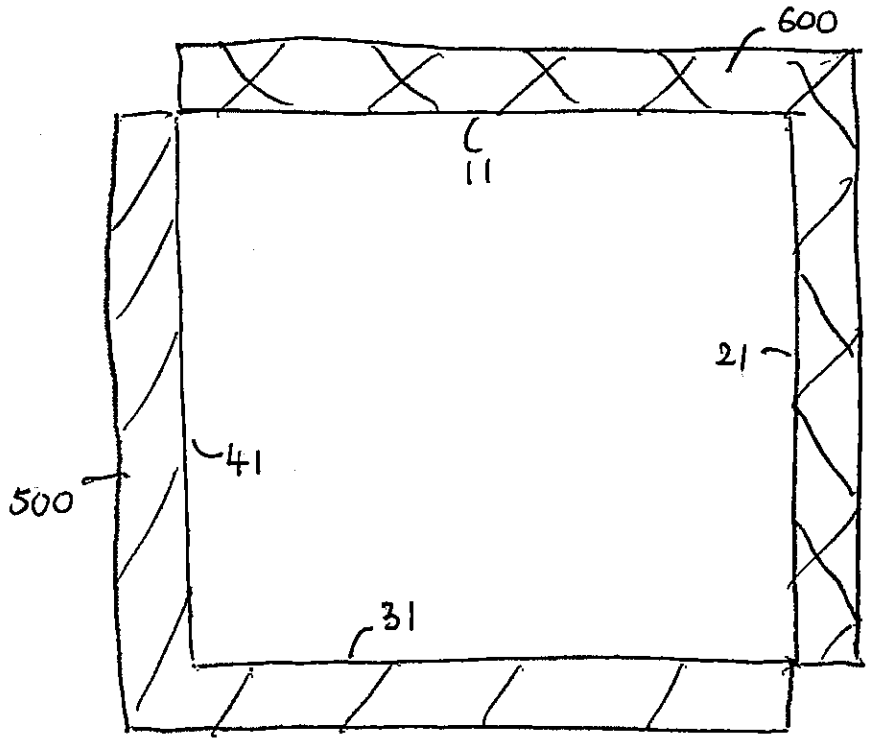

FIGURE 11

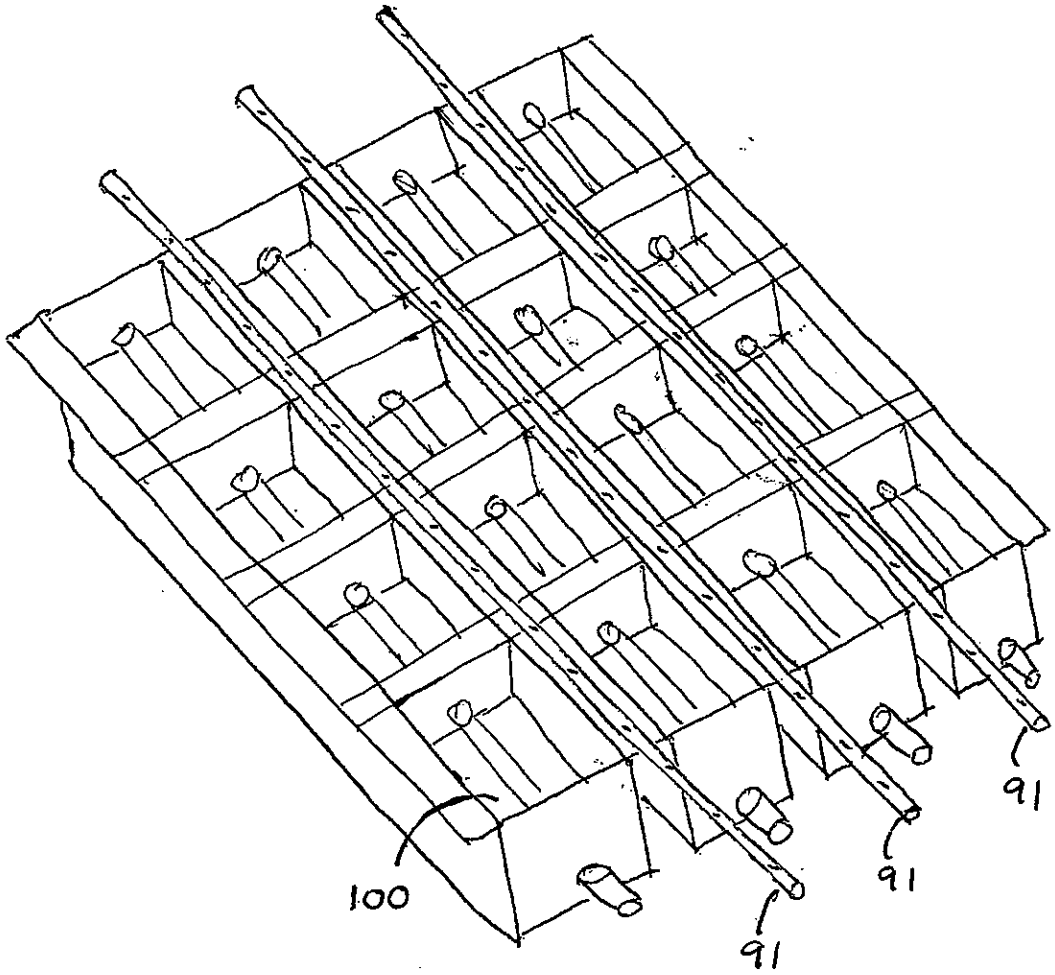

FIGURE 12