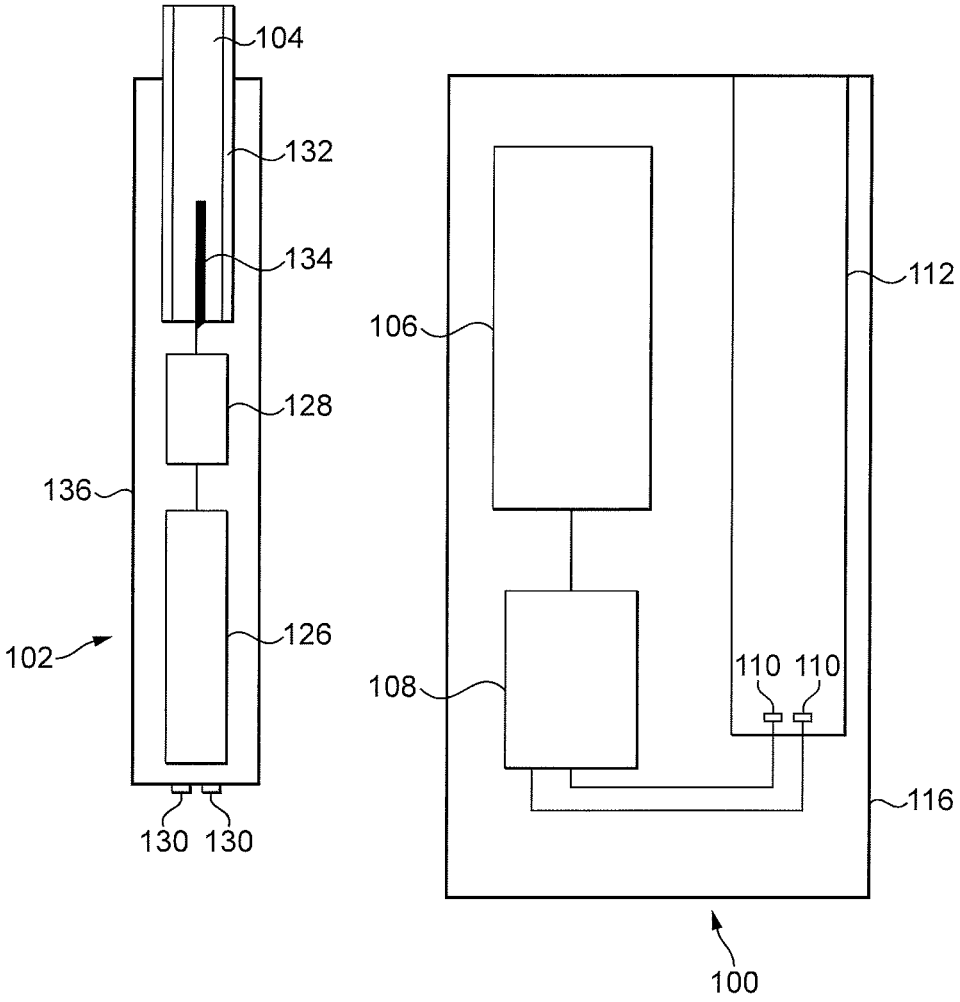

FIG. 1

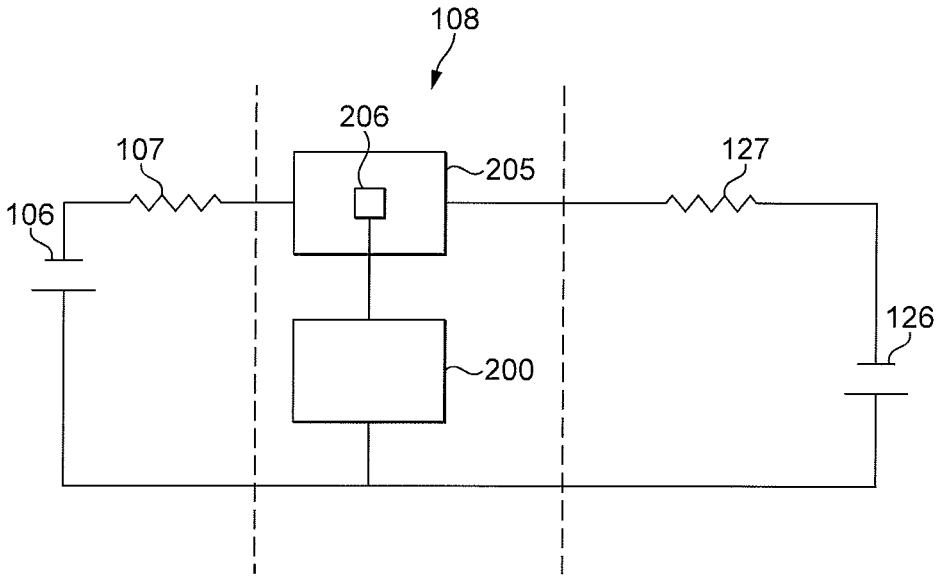

FIG. 2

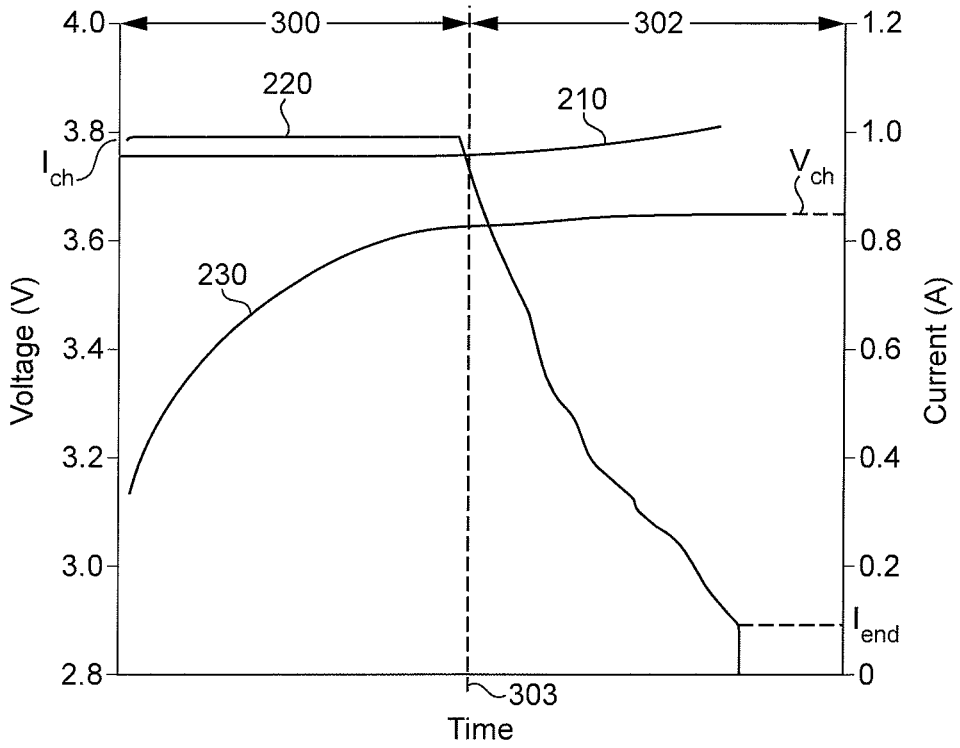
4.0
3.8
3.6
3.4
3.2
3.0
2.8
Voltage (V)
300
302
220
210
230
I_{ch}
V_{ch}
I_{end}
303
Time
1.2
1.0
0.8
0.6
0.4
0.2
0
Current (A)

FIG. 3

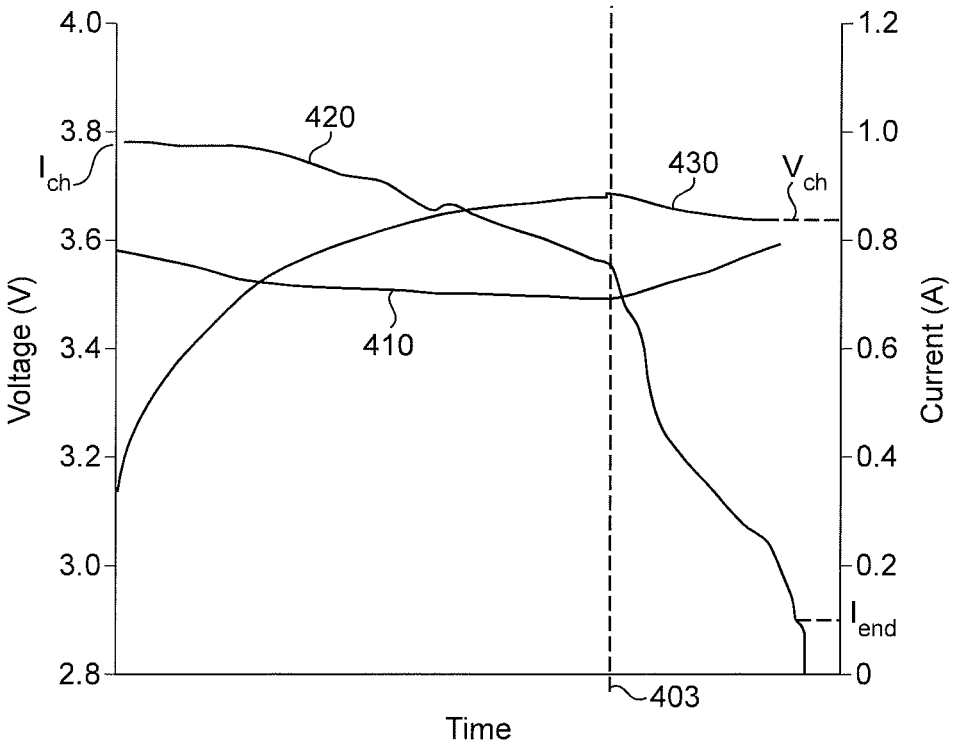
4.0
3.8
3.6
3.4
3.2
3.0
2.8
Voltage (V)
420
430
410
I_{ch}
V_{ch}
I_{end}
403
Time
1.2
1.0
0.8
0.6
0.4
0.2
0
Current (A)

FIG. 4

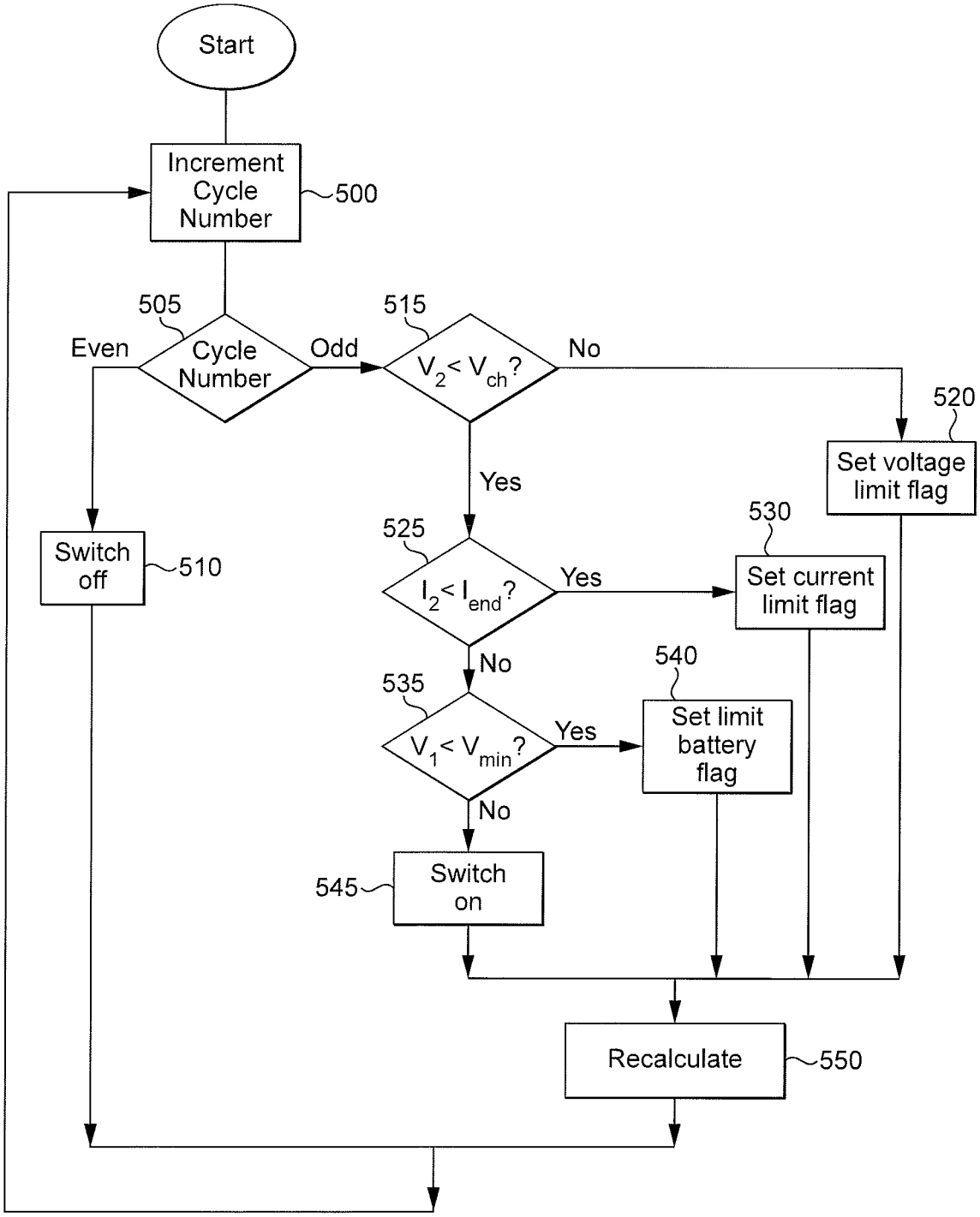
Start
Increment Cycle Number
500
505
Cycle Number
Even
Odd
515
$V_2 < V_{ch}$?
No
520
Set voltage limit flag
Yes
Switch off
510
525
$I_2 < I_{end}$?
Yes
530
Set current limit flag
No
535
$V_1 < V_{min}$?
Yes
540
Set limit battery flag
No
545
Switch on
Recalculate
550

FIG. 5