(12) INTERNATIONAL APPLICATION PUBLISHED UNDER THE PATENT COOPERATION TREATY (PCT)

(19) World Intellectual Property Organization
International Bureau

(43) International Publication Date
23 October 2008 (23.10.2008)

PCT

(10) International Publication Number
WO 2008/124865 A1

(51) International Patent Classification:
F24D 17/00 (2006.01) *F24D 19/10* (2006.01)
F24H 1/08 (2006.01) *F24H 1/18* (2006.01)
F24H 9/20 (2006.01) *G12B 13/00* (2006.01)

(21) International Application Number:
PCT/AU2008/000500

(22) International Filing Date: 8 April 2008 (08.04.2008)

(25) Filing Language: English

(26) Publication Language: English

(30) Priority Data:
2007901960 13 April 2007 (13.04.2007) AU

(71) Applicant *(for all designated States except US)*: **RHEEM AUSTRALIA PTY LIMITED** [AU/AU]; 1 Alan Street, Rydalmere, New South Wales 2116 (AU).

(72) Inventors; and
(75) Inventors/Applicants *(for US only)*: **TROUTE, Patrick** [NZ/NZ]; 11 Ardmore Road, Herne Bay, Auckland, 1011 (NZ). **GUILFOYLE, Philip** [AU/AU]; 56 Ernest Street, Crows Nest, New South Wales 2065 (AU).

(74) Agents: **CONRICK, Patrick, Michael** et al.; Halford & Co, 1 Market Street, Sydney, New South Wales 2000 (AU).

(81) Designated States *(unless otherwise indicated, for every kind of national protection available)*: AE, AG, AL, AM, AO, AT, AU, AZ, BA, BB, BG, BH, BR, BW, BY, BZ, CA, CH, CN, CO, CR, CU, CZ, DE, DK, DM, DO, DZ, EC, EE, EG, ES, FI, GB, GD, GE, GH, GM, GT, HN, HR, HU, ID, IL, IN, IS, JP, KE, KG, KM, KN, KP, KR, KZ, LA, LC, LK, LR, LS, LT, LU, LY, MA, MD, ME, MG, MK, MN, MW, MX, MY, MZ, NA, NG, NI, NO, NZ, OM, PG, PH, PL, PT, RO, RS, RU, SC, SD, SE, SG, SK, SL, SM, SV, SY, TJ, TM, TN, TR, TT, TZ, UA, UG, US, UZ, VC, VN, ZA, ZM, ZW.

(84) Designated States *(unless otherwise indicated, for every kind of regional protection available)*: ARIPO (BW, GH, GM, KE, LS, MW, MZ, NA, SD, SL, SZ, TZ, UG, ZM, ZW), Eurasian (AM, AZ, BY, KG, KZ, MD, RU, TJ, TM), European (AT, BE, BG, CH, CY, CZ, DE, DK, EE, ES, FI, FR, GB, GR, HR, HU, IE, IS, IT, LT, LU, LV, MC, MT, NL, NO, PL, PT, RO, SE, SI, SK, TR), OAPI (BF, BJ, CF, CG, CI, CM, GA, GN, GQ, GW, ML, MR, NE, SN, TD, TG).

Published:
— *with international search report*

(54) Title: IMPROVEMENTS IN WATER HEATERS

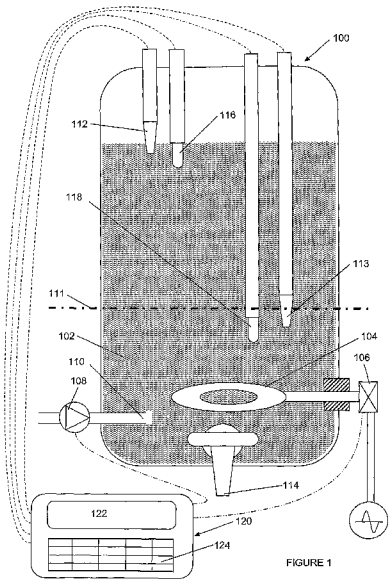

FIGURE 1

(57) Abstract: A method of calibrating a water heater, the method including the steps of adding water to the tank to a first predetermined water level (402); heating the water to a first temperature threshold (408); maintaining the temperature at approximately the first temperature threshold for a first period of time (412); heating the water until the rate of temperature change is less than a first predetermined rate (418); maintaining the temperature so measured for a second period of time (420); applying full heat until the temperature change rate meets a selected rate (428), and measuring and recording the temperature (430, 432).

WO 2008/124865 A1