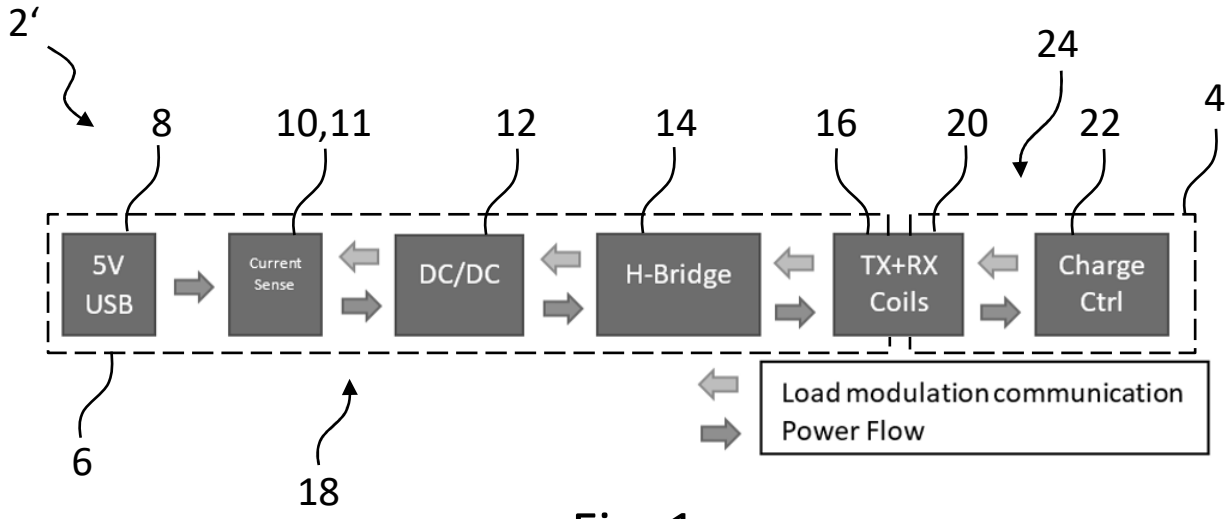
2'
8
10,11
12
14
16
20
24
22
4
5V USB
Current Sense
DC/DC
H-Bridge
TX+RX Coils
Charge Ctrl
6
18
Load modulation communication
Power Flow

Fig. 1

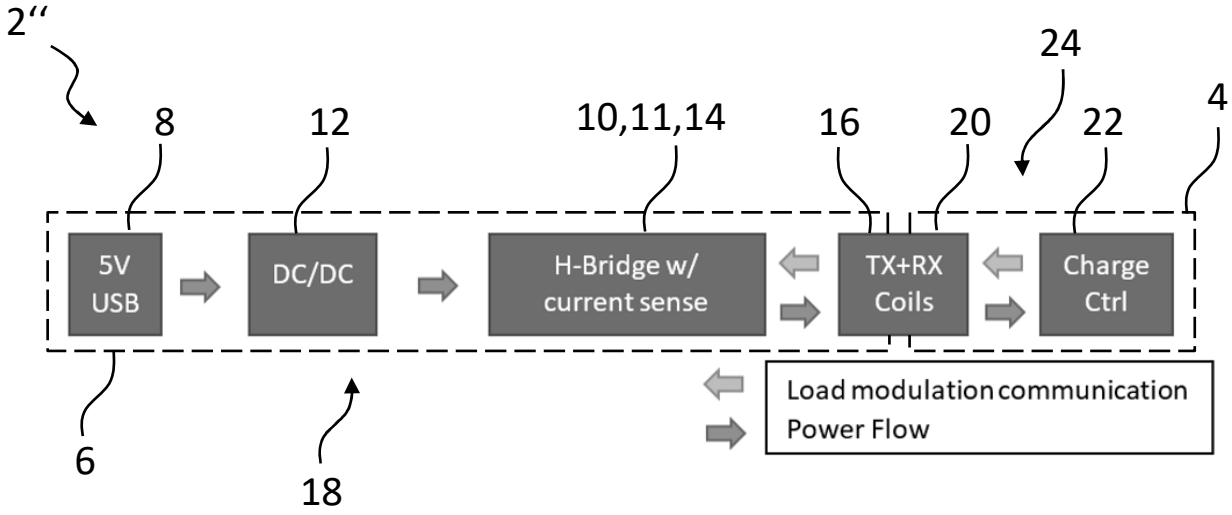
2''
8
12
10,11,14
16
20
24
22
4
5V USB
DC/DC
H-Bridge w/ current sense
TX+RX Coils
Charge Ctrl
6
18
Load modulation communication
Power Flow

Fig. 2

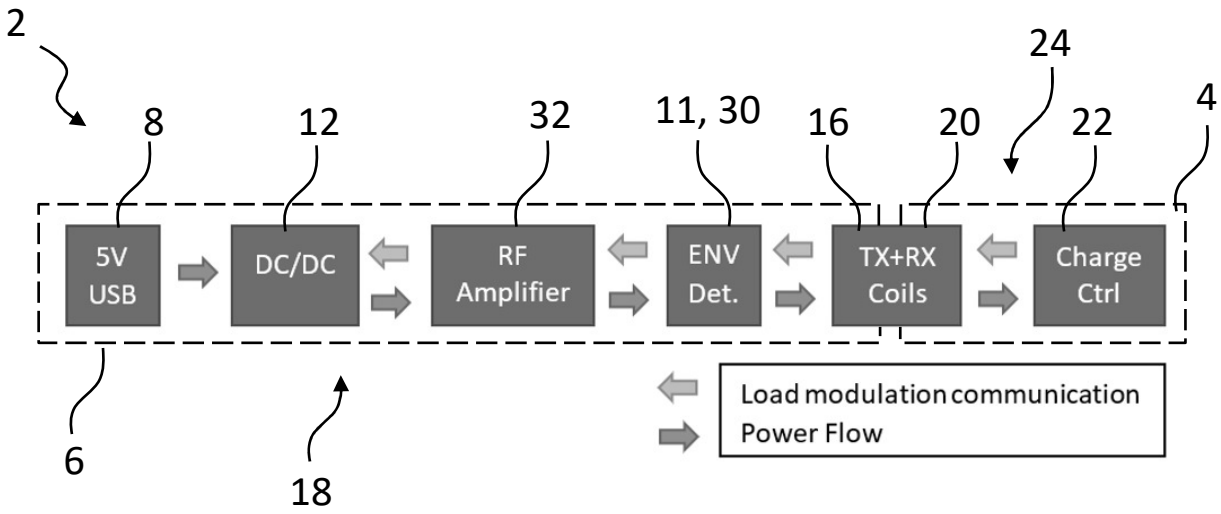
2
8
12
32
11, 30
16
20
24
22
4
5V USB
DC/DC
RF Amplifier
ENV Det.
TX+RX Coils
Charge Ctrl
6
18
Load modulation communication
Power Flow

Fig. 3

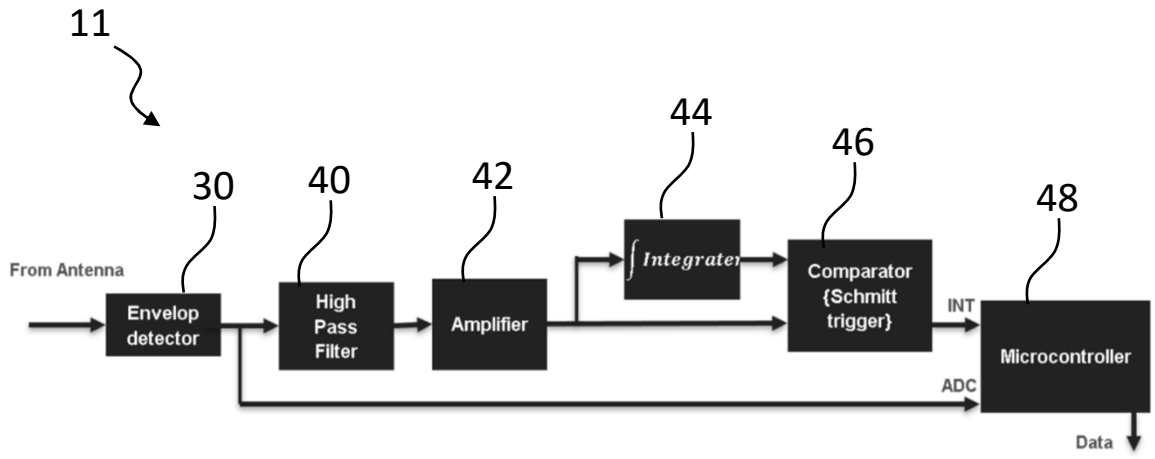
11
30
40
42
44
46
48
From Antenna
Envelop detector
High Pass Filter
Amplifier
∫ Integrater
Comparator {Schmitt trigger}
INT
Microcontroller
ADC
Data

Fig. 4

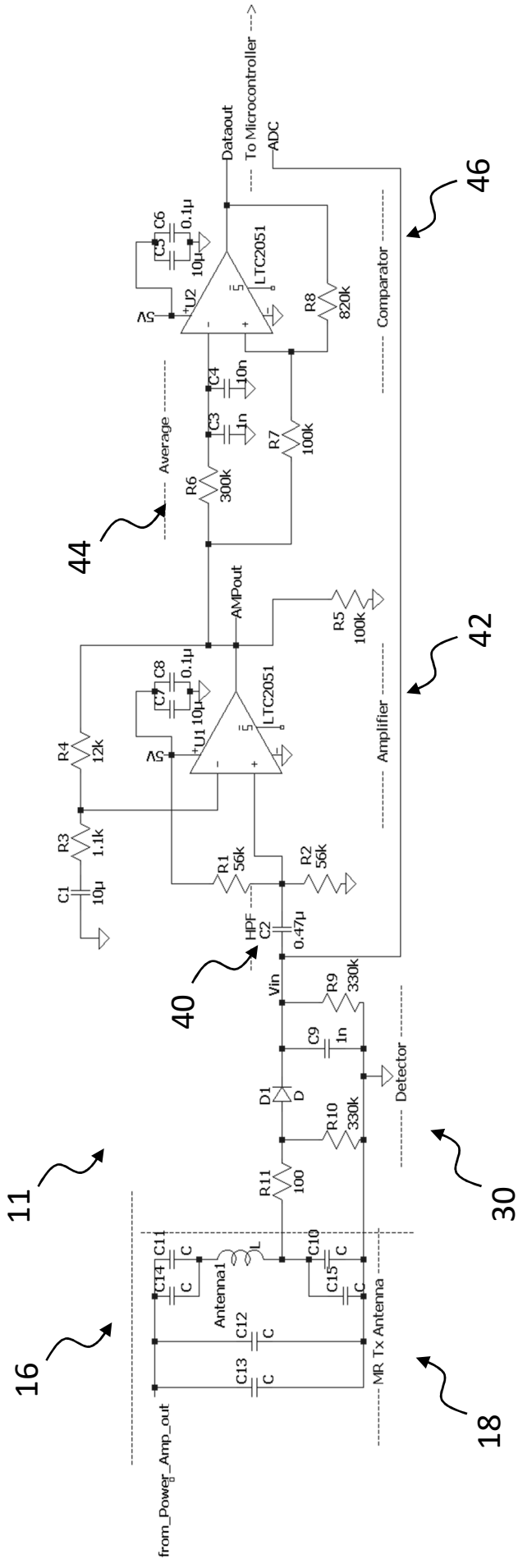

Dataout
To Microcontroller
ADC
46
C6
0.1µ
C5
10µ
U2
LTC2051
5V
R8
820k
Comparator
C4
10n
C3
1n
R7
100k
Average
R6
300k
44
AMPout
R5
100k
42
C8
0.1µ
C7
10µ
U1
LTC2051
5V
R4
12k
Amplifier
R3
1.1k
C1
10µ
R1
56k
R2
56k
HPF
C2
0.47µ
40
Vin
R9
330k
C9
1n
Detector
D1
D
R10
330k
R11
100
11
30
C11
C
C14
C
Antenna1
L
C10
C
C15
C
C12
C
C13
C
MR Tx Antenna
16
18
from_Power_Amp_out

Fig. 5

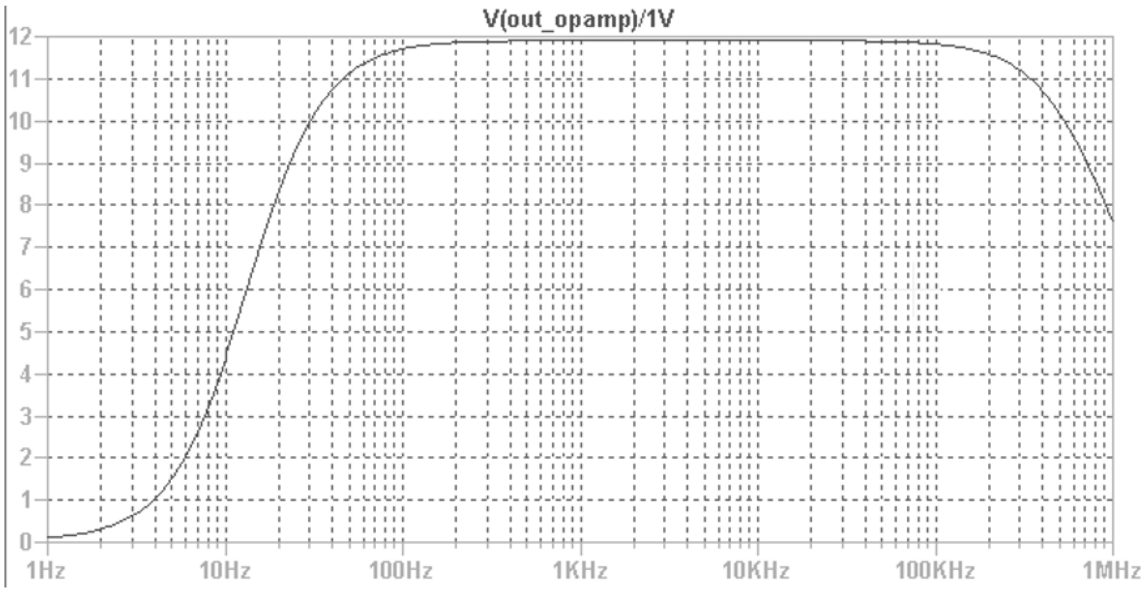
V(out_opamp)/1V
12
11
10
9
8
7
6
5
4
3
2
1
0
1Hz
10Hz
100Hz
1KHz
10KHz
100KHz
1MHz

Fig. 6

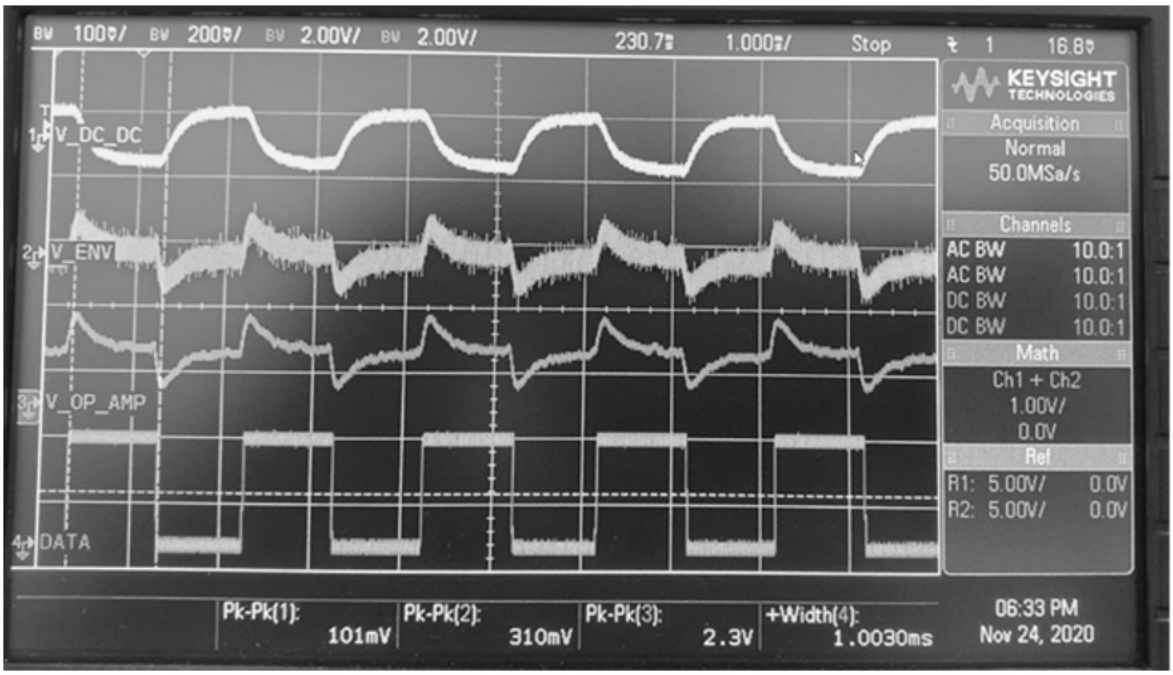
100mV/
200mV/
2.00V/
2.00V/
230.7Hz
1.000kHz/
Stop
1
16.8mV
KEYSIGHT TECHNOLOGIES
Acquisition
Normal
50.0MSa/s
Channels
AC BW 10.0:1
AC BW 10.0:1
DC BW 10.0:1
DC BW 10.0:1
Math
Ch1 + Ch2
1.00V/
0.0V
Ref
R1: 5.00V/ 0.0V
R2: 5.00V/ 0.0V
V_DC_DC
V_ENV
V_OP_AMP
DATA
Pk-Pk(1): 101mV
Pk-Pk(2): 310mV
Pk-Pk(3): 2.3V
+Width(4): 1.0030ms
06:33 PM
Nov 24, 2020

Fig. 7