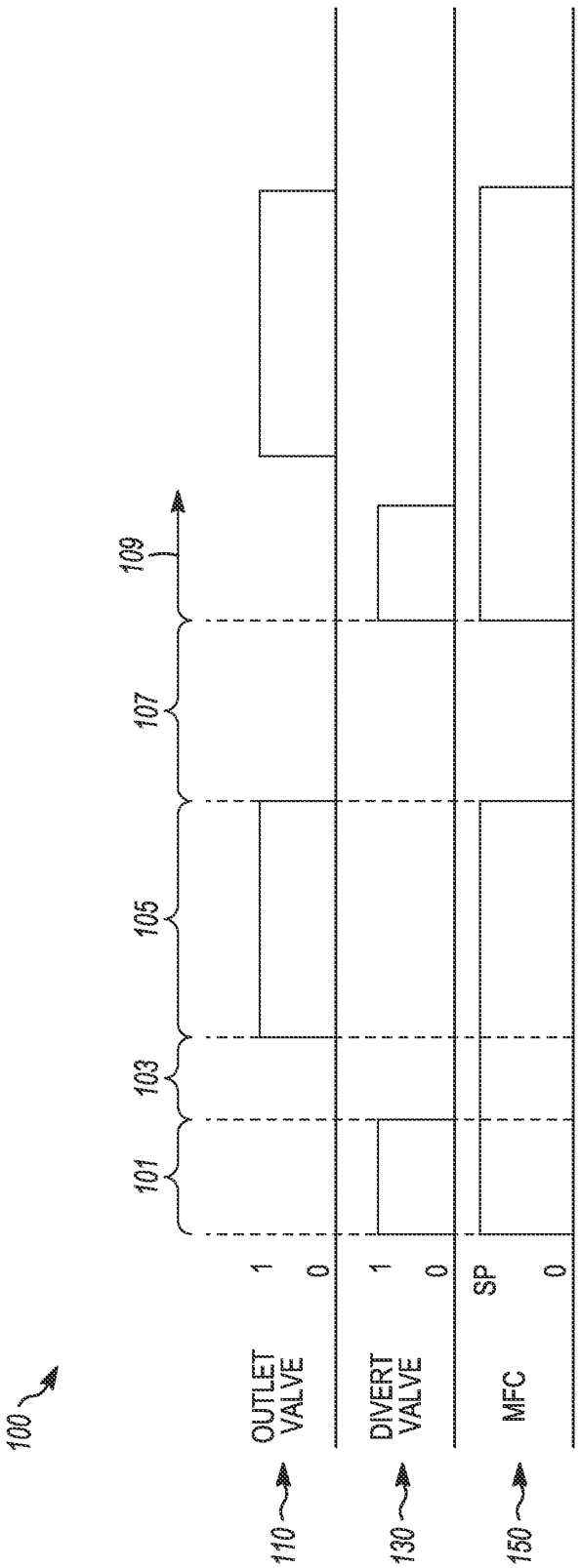

FIG. 1A
(PRIOR ART)

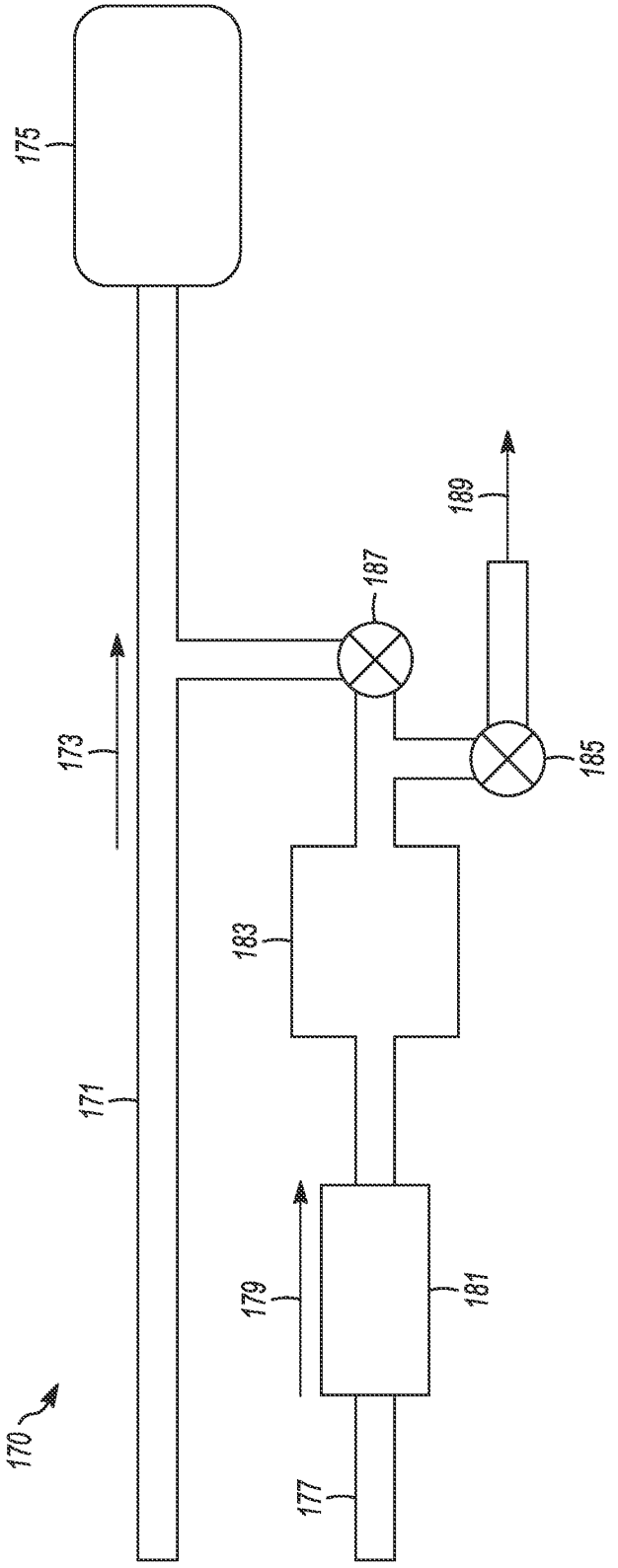

FIG. 1B
(PRIOR ART)

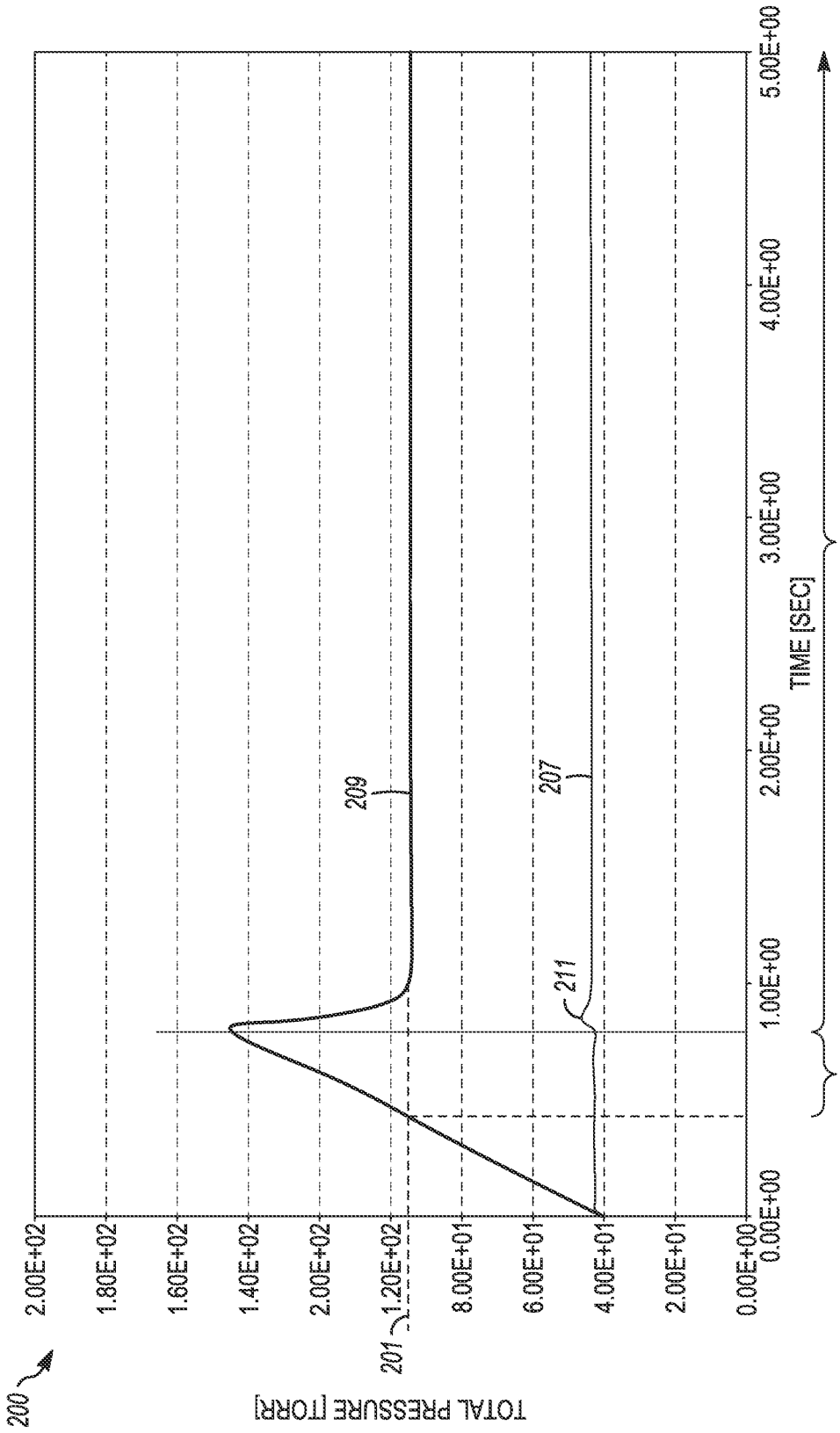

FIG. 2
(PRIOR ART)

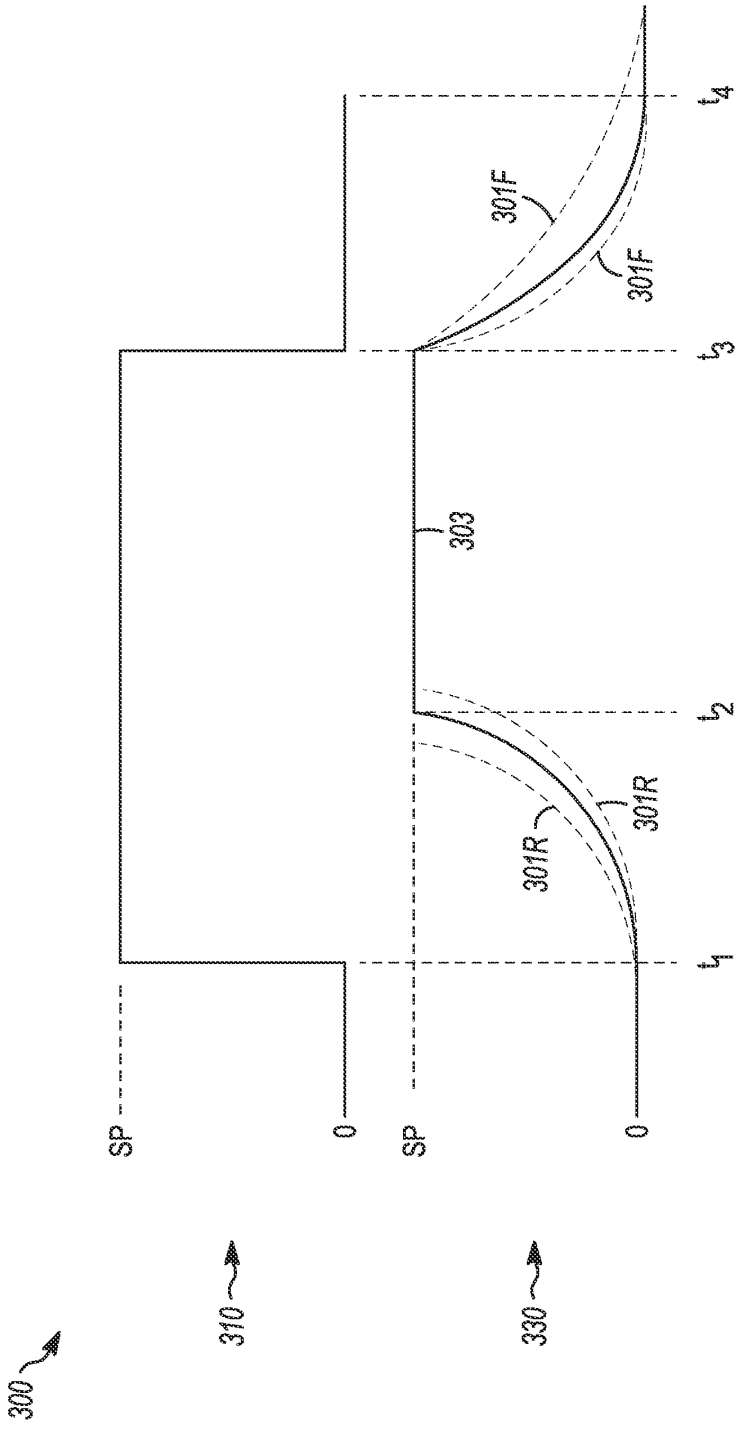

FIG. 3
(PRIOR ART)

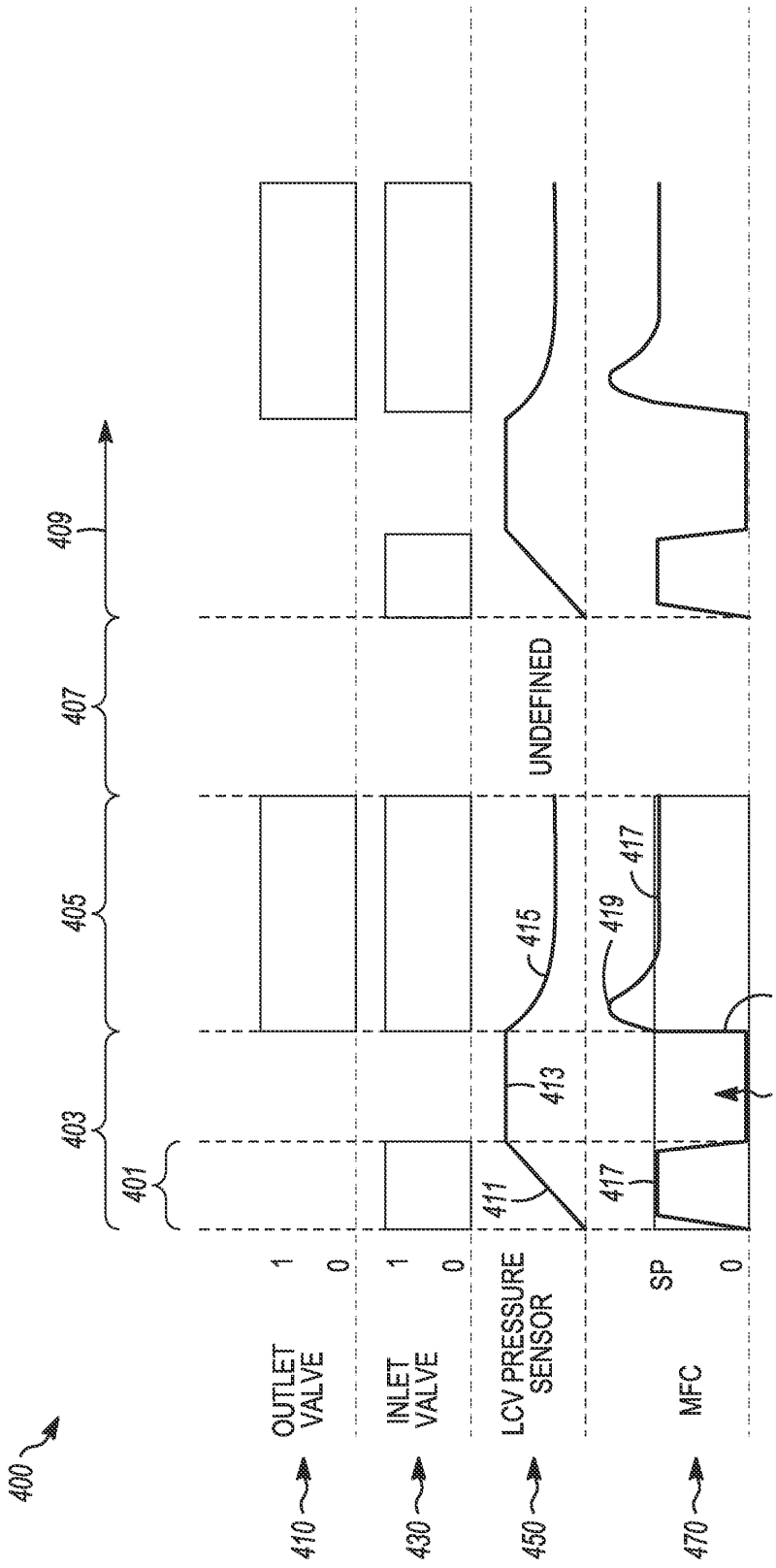
400
410
OUTLET VALVE
1
0
430
INLET VALVE
1
0
450
LCV PRESSURE SENSOR
UNDEFINED
SP
470
MFC
0
401
403
405
407
409
411
413
415
417
419
421

FIG. 4A

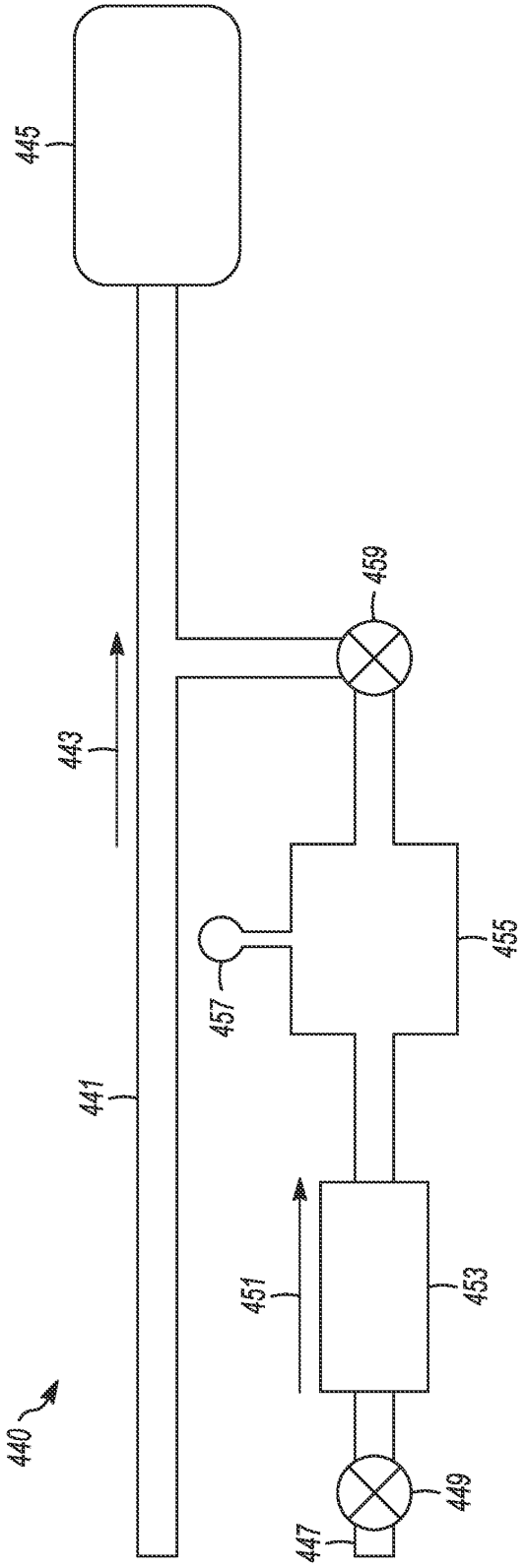

FIG. 4B

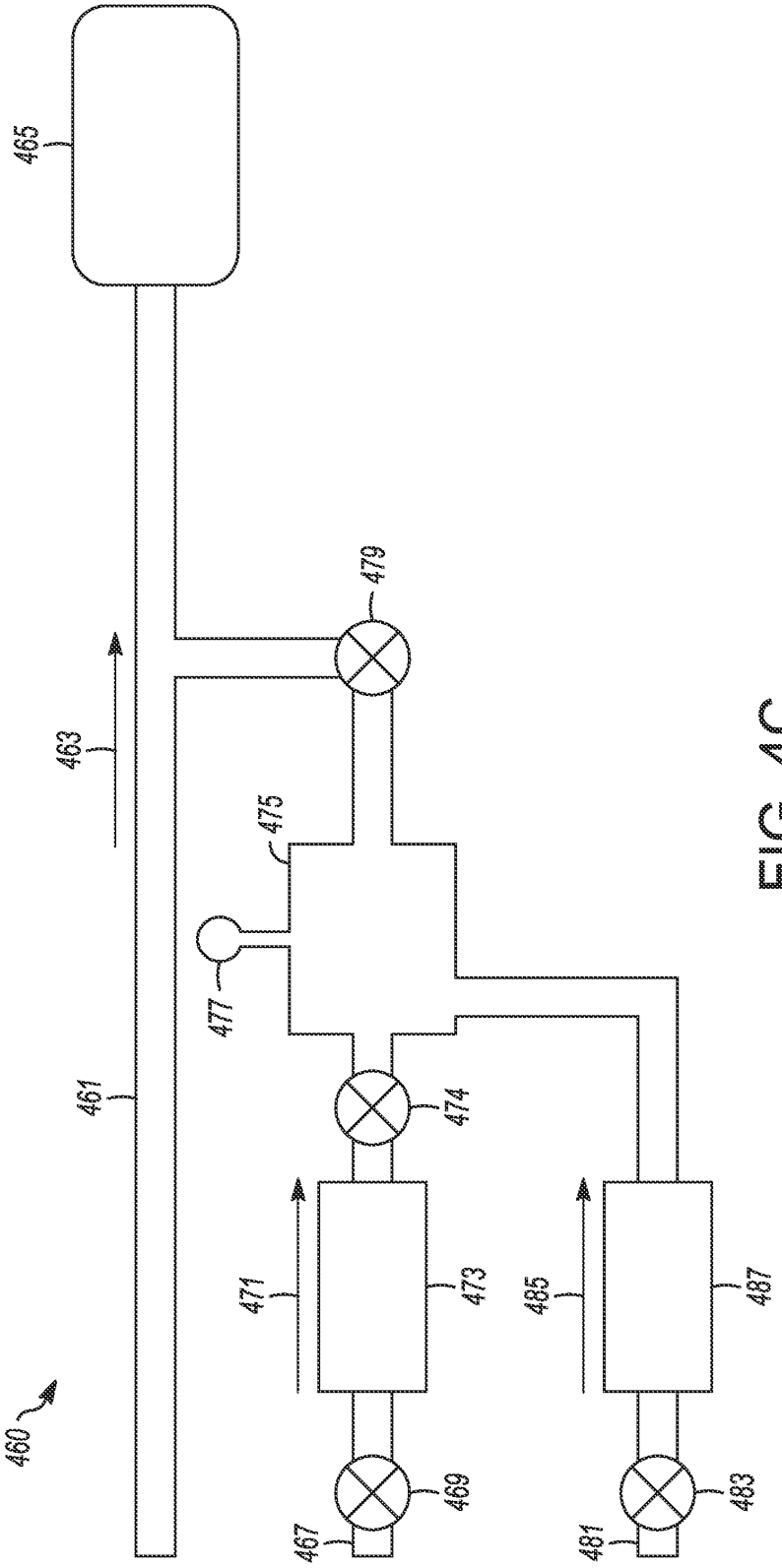

FIG. 4C

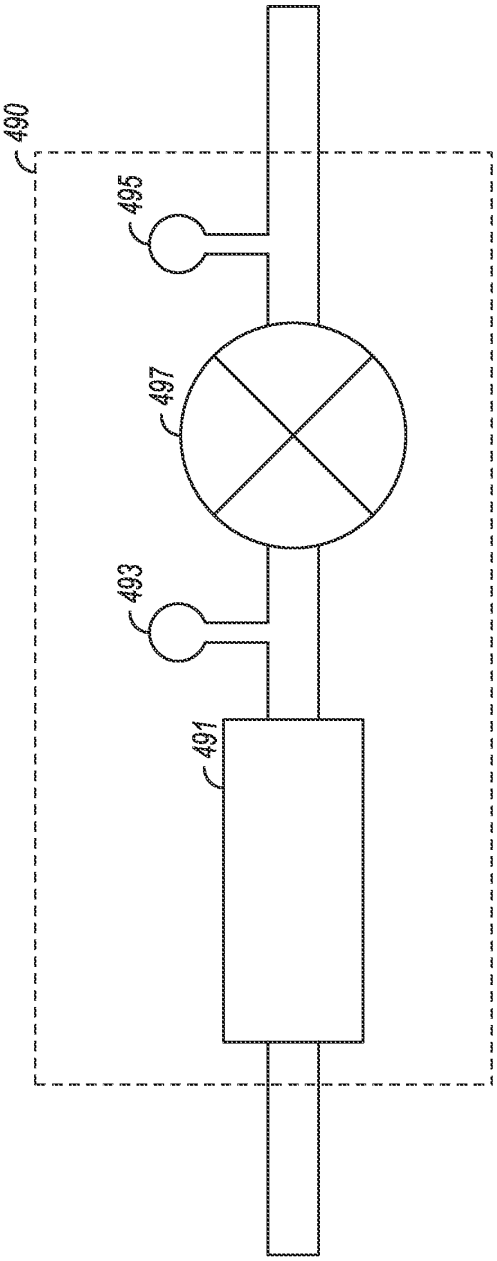

FIG. 4D

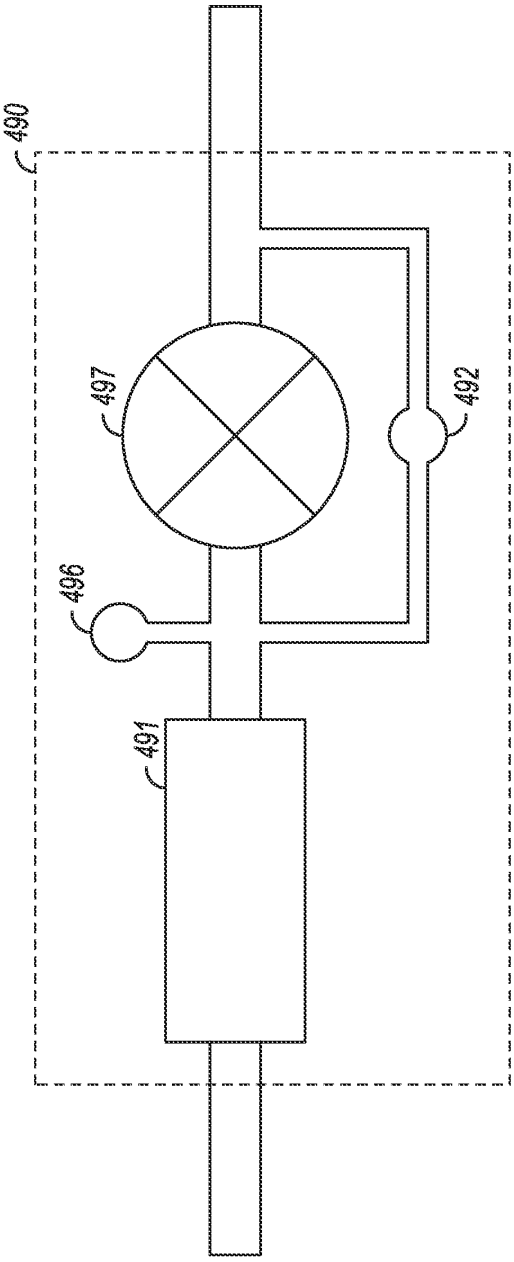

FIG. 4E

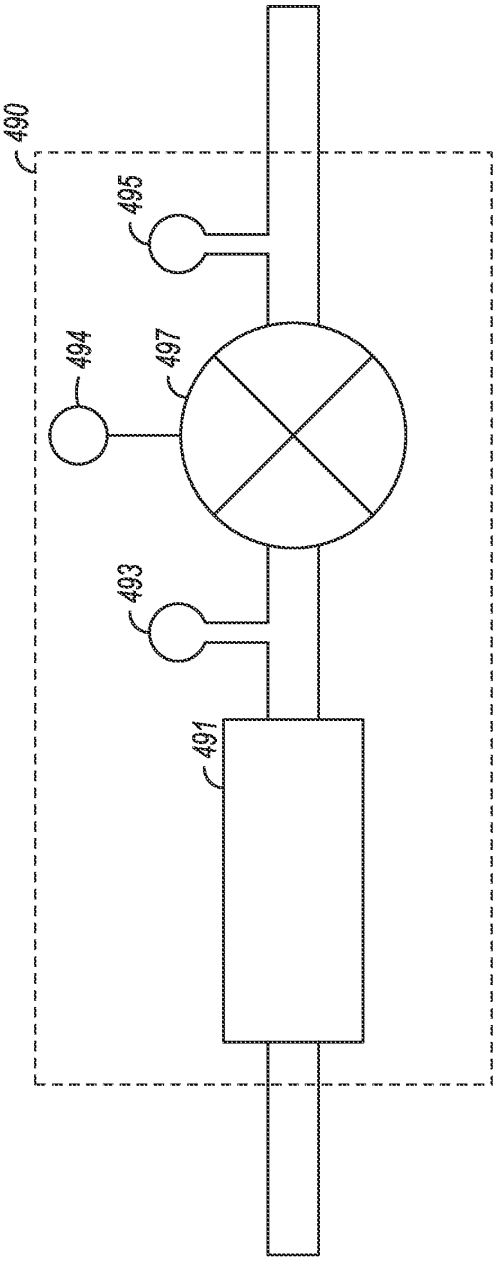

FIG. 4F

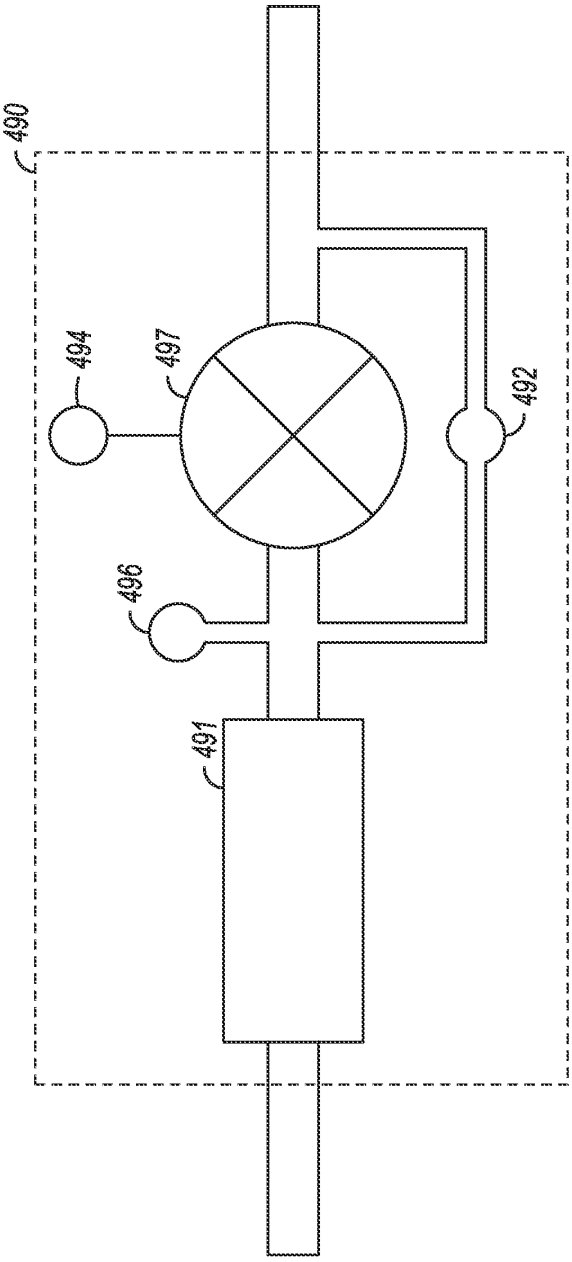

FIG. 4G

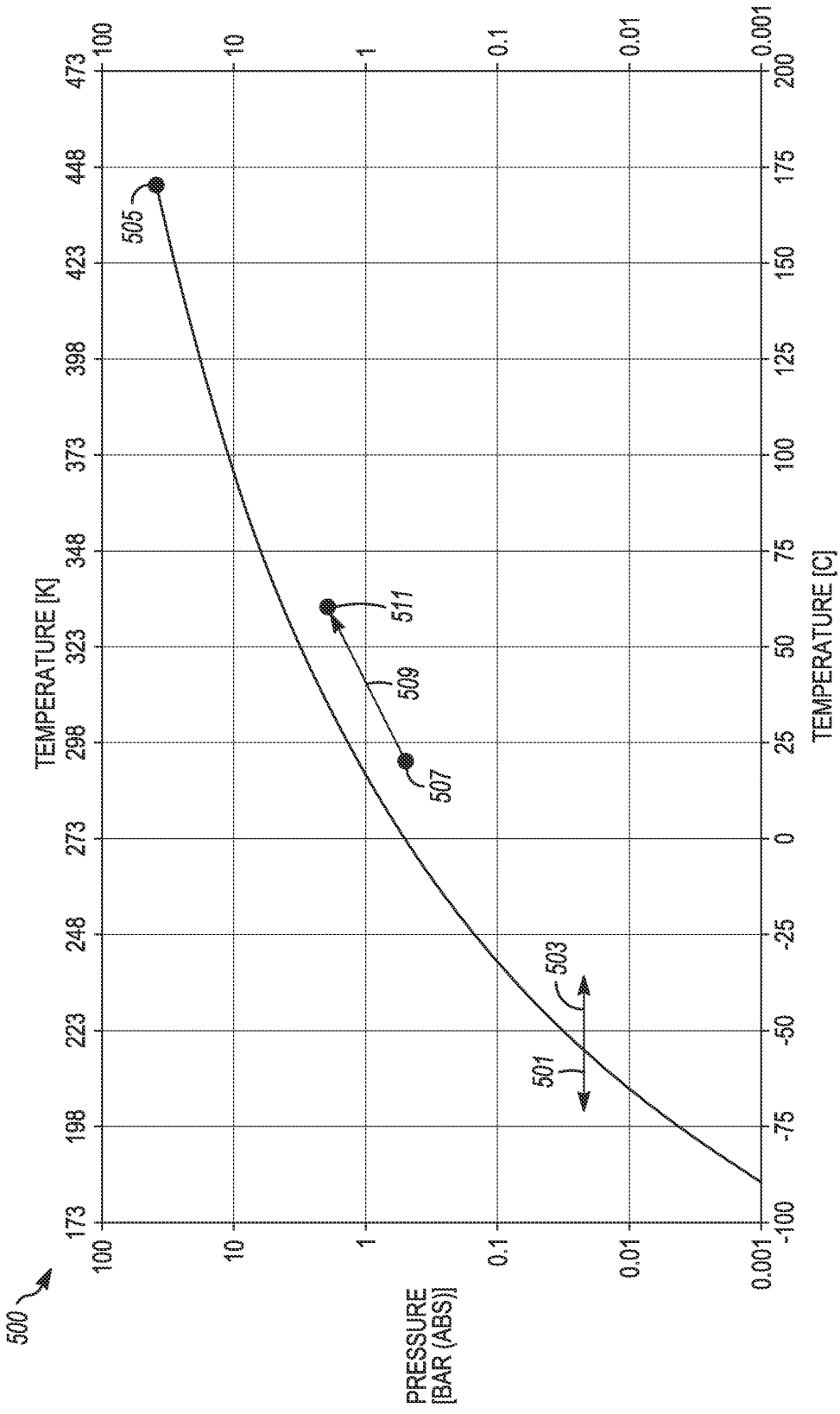
500
PRESSURE [BAR (ABS)]
100
10
1
0.1
0.01
0.001
TEMPERATURE [K]
173
198
223
248
273
298
323
348
373
398
423
448
473
TEMPERATURE [C]
-100
-75
-50
-25
0
25
50
75
100
125
150
175
200
505
511
509
507
503
501

FIG. 5