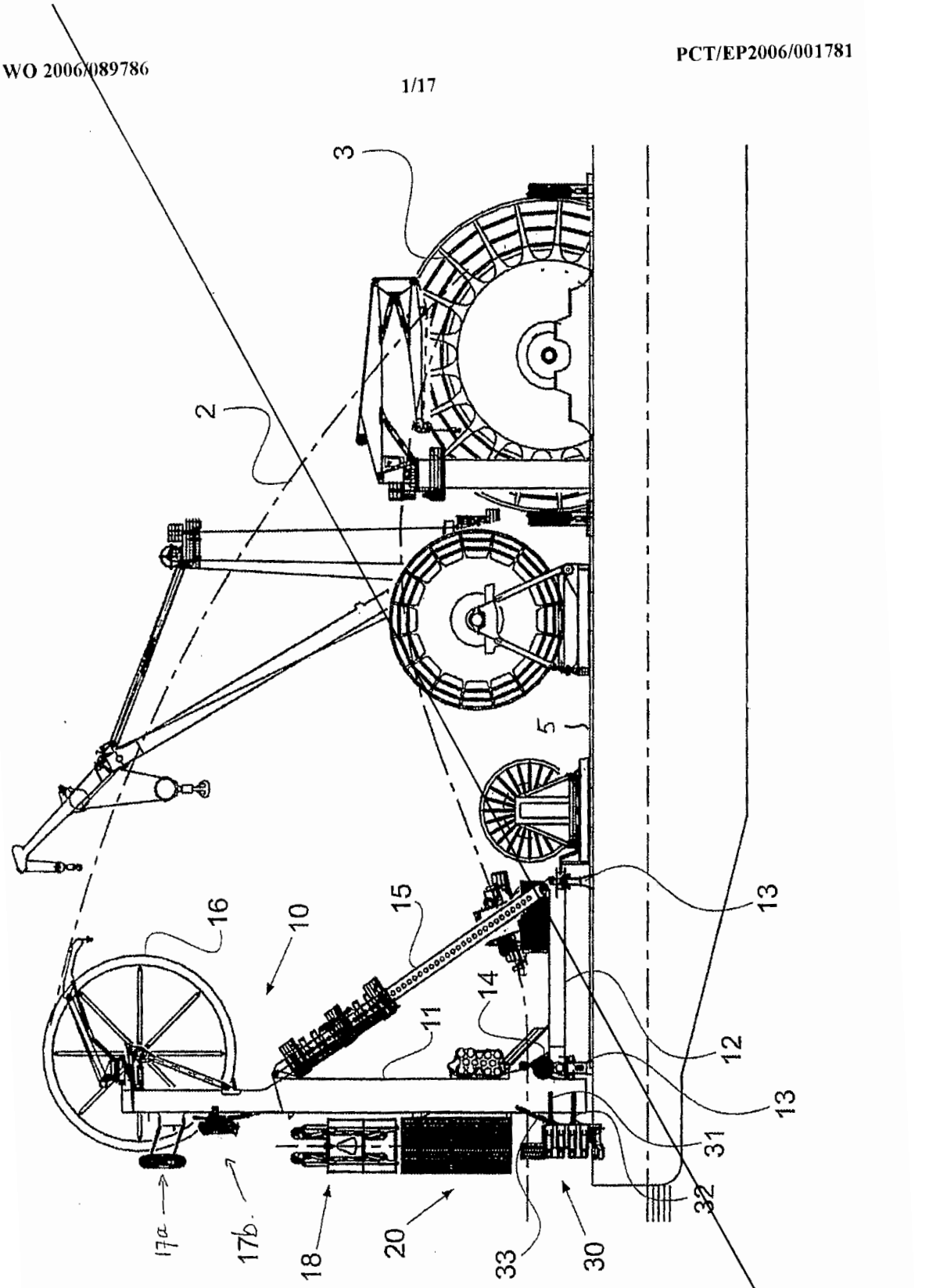

FIGURE 1

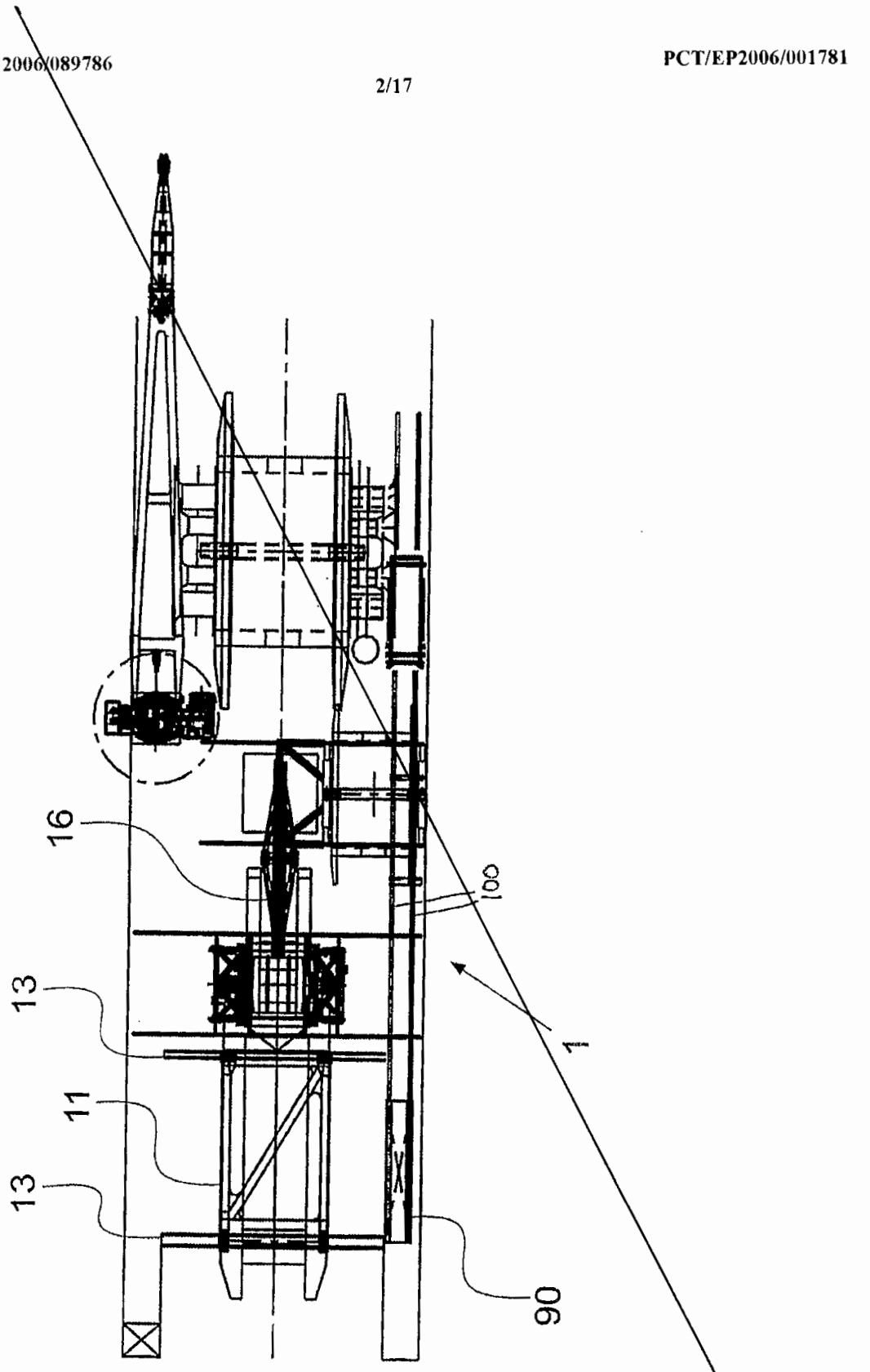

FIGURE 2

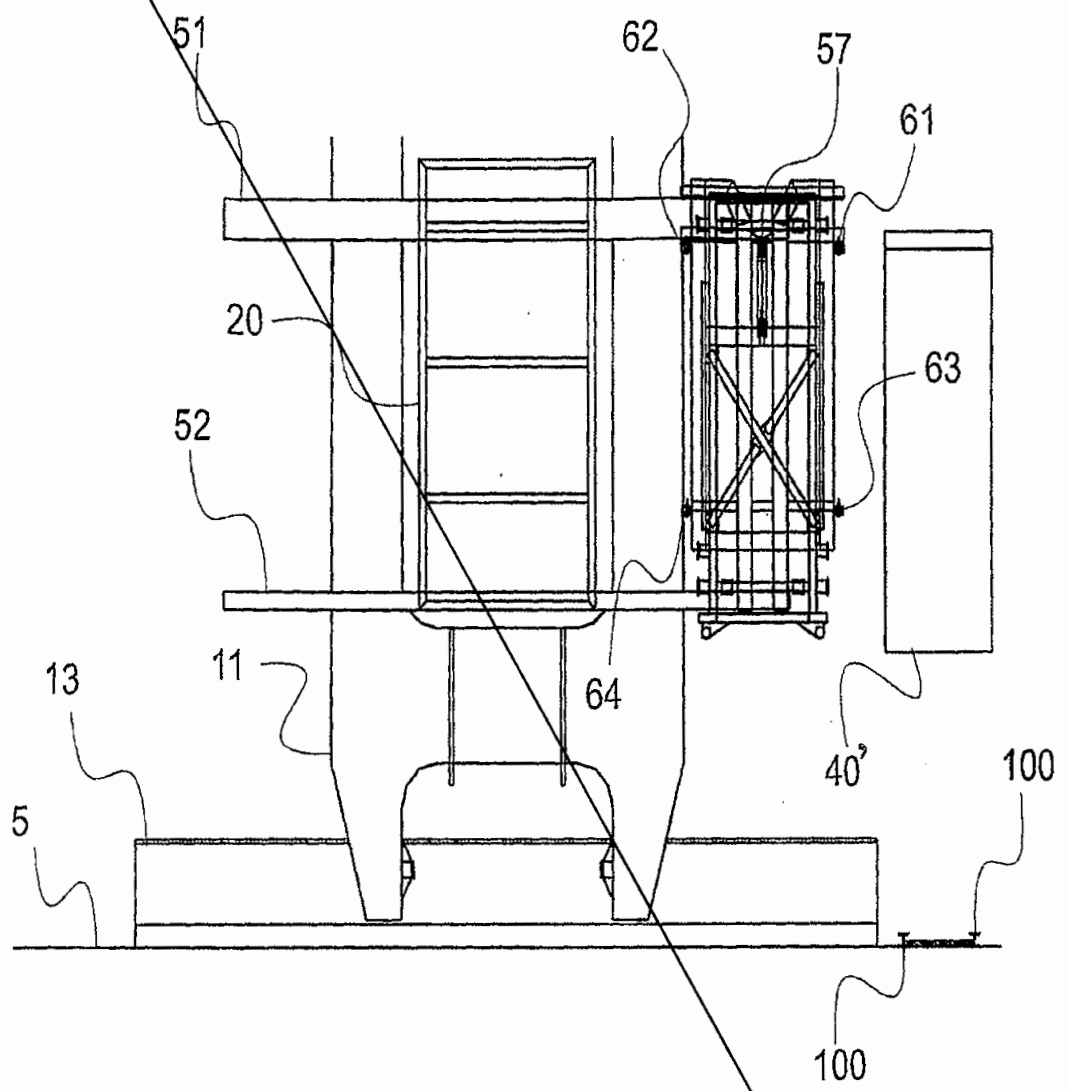

FIGURE 3

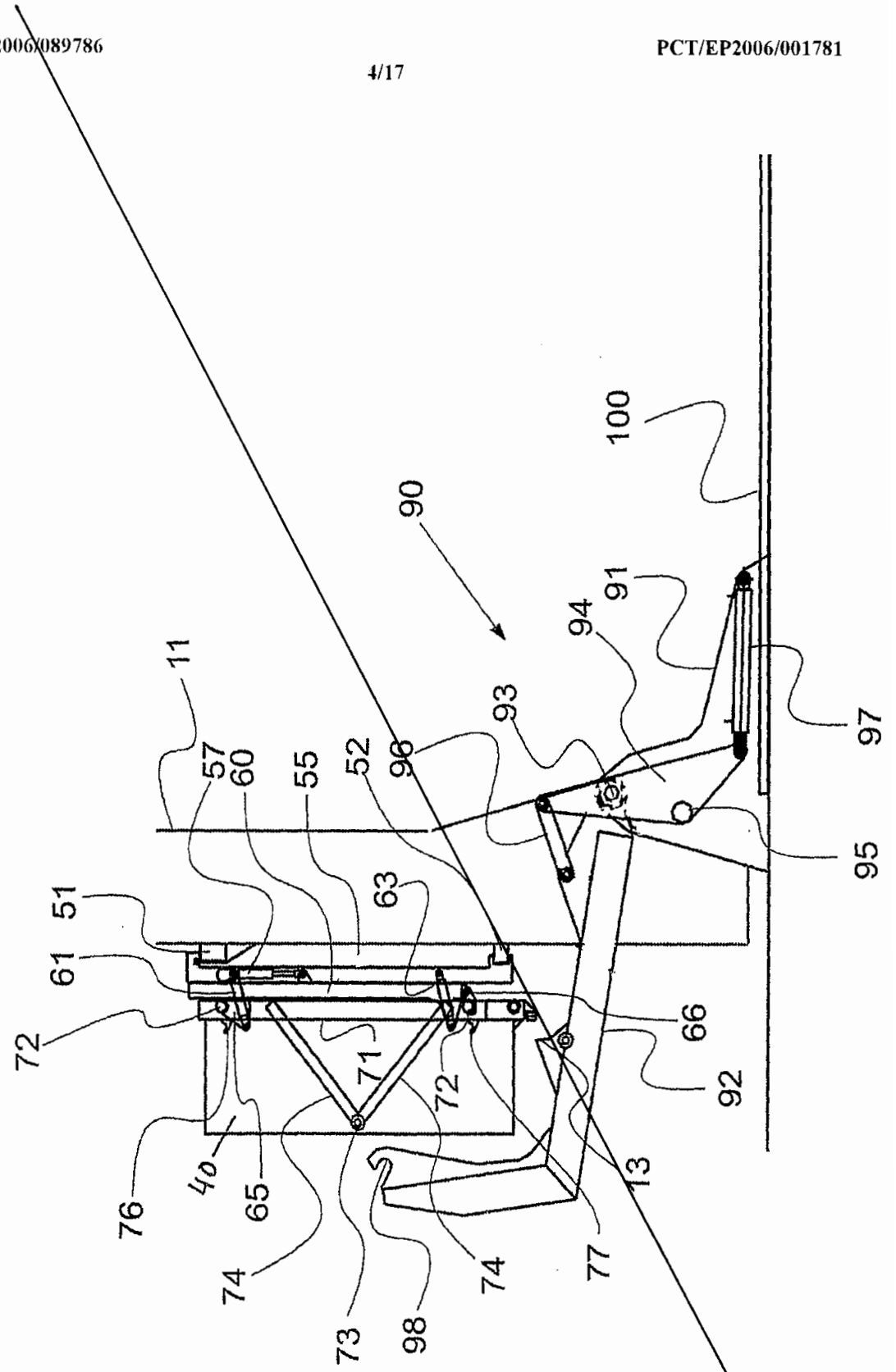
100
90
91
94
97
11
57
60
55
52
96
93
95
63
51
61
66
72
71
72
92
76
40
65
74
73
98
74
77
13

FIGURE 4

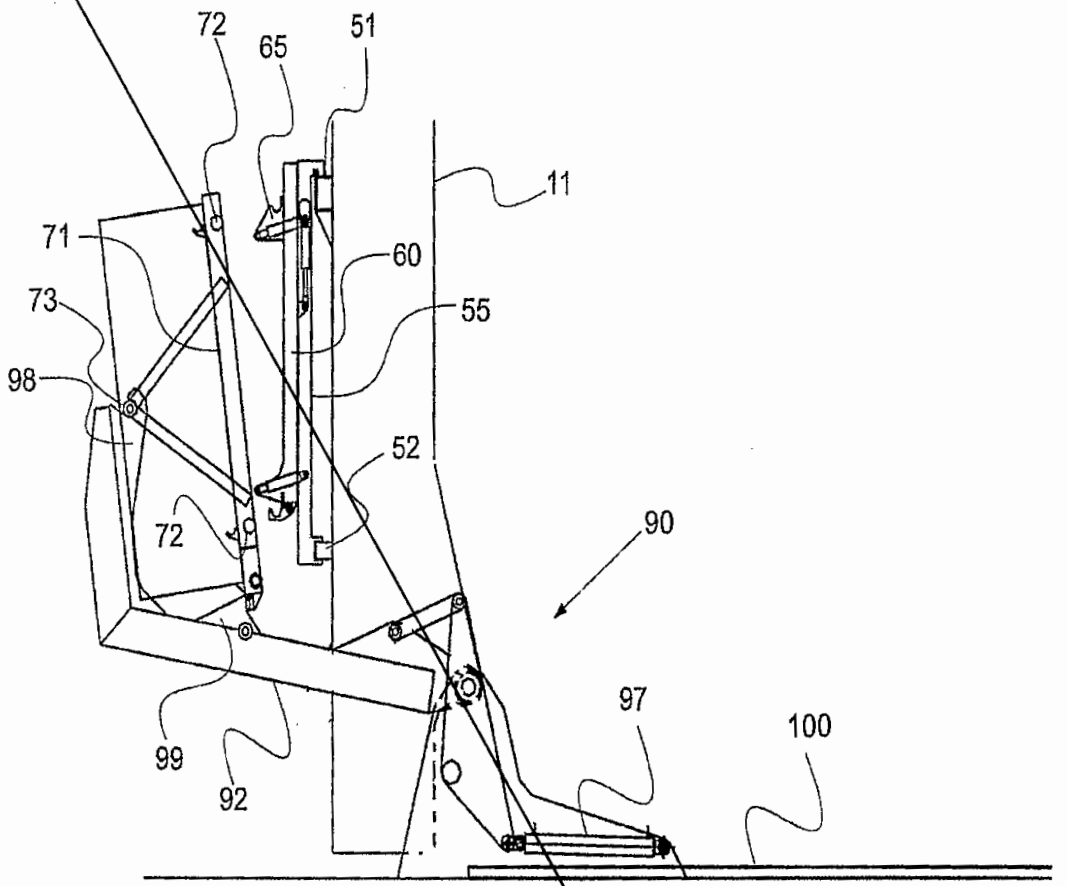

FIGURE 5

FIGURE 6a

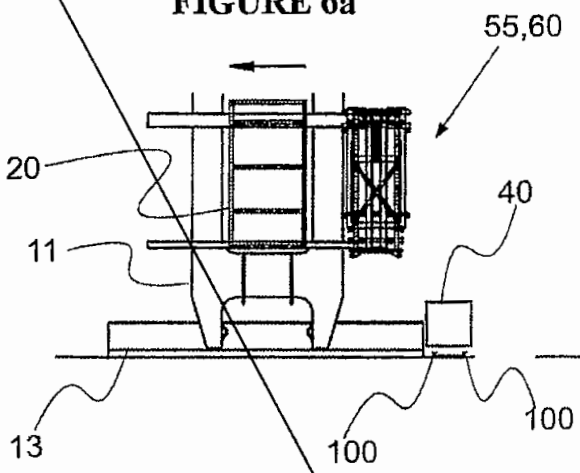

FIGURE 6b

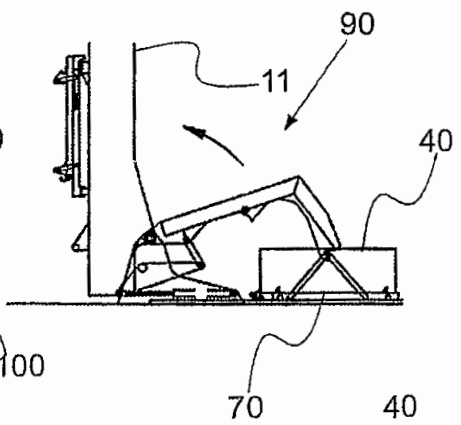

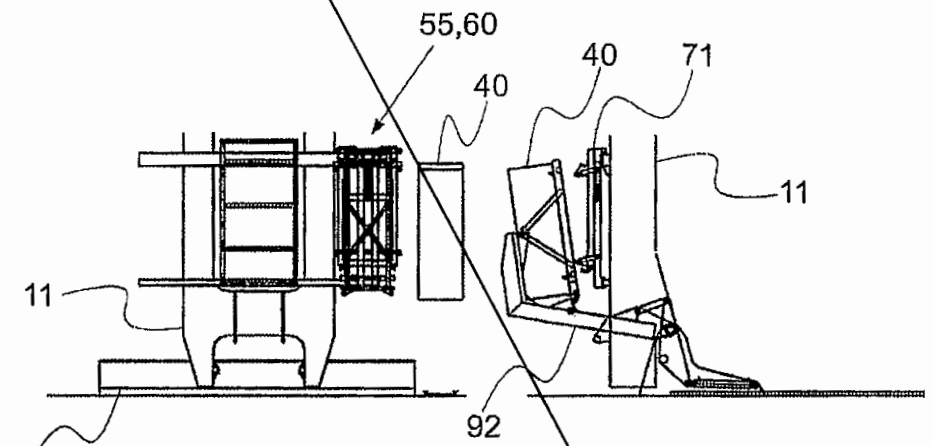

FIGURE 6c

FIGURE 6d

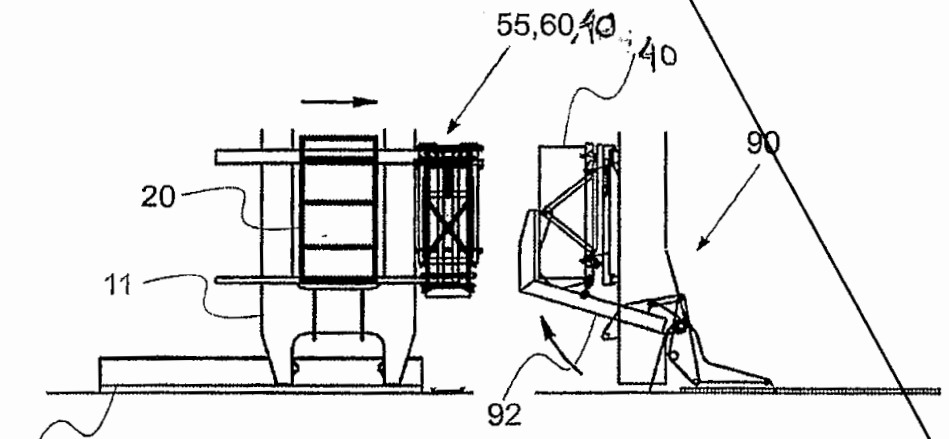

FIGURE 6e

FIGURE 6f

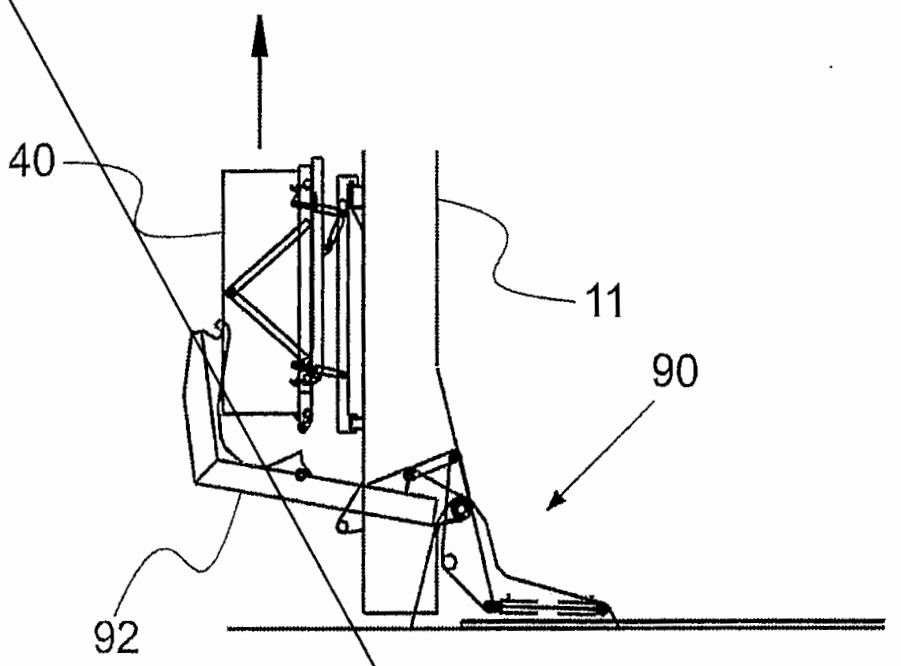

FIGURE 6g

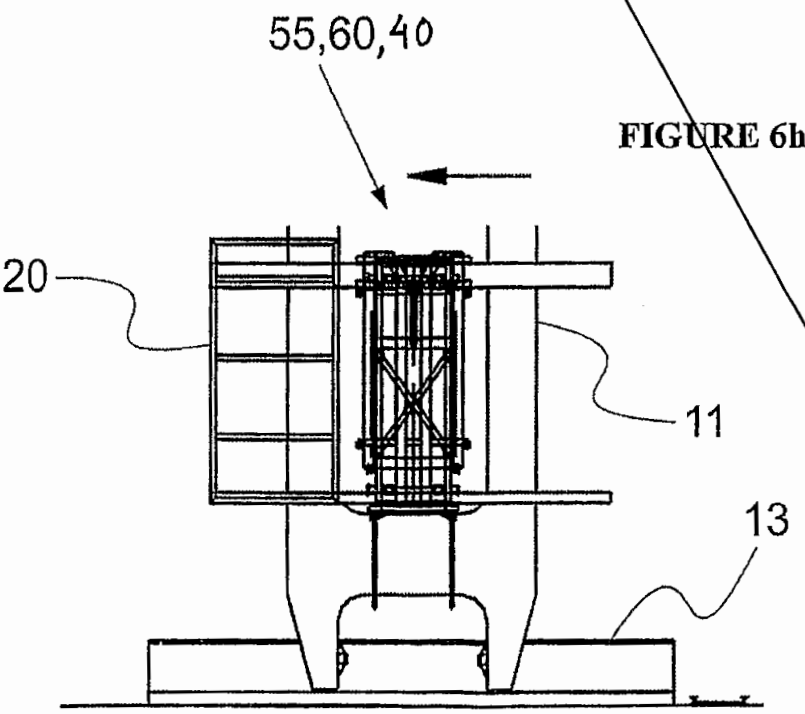

FIGURE 6h

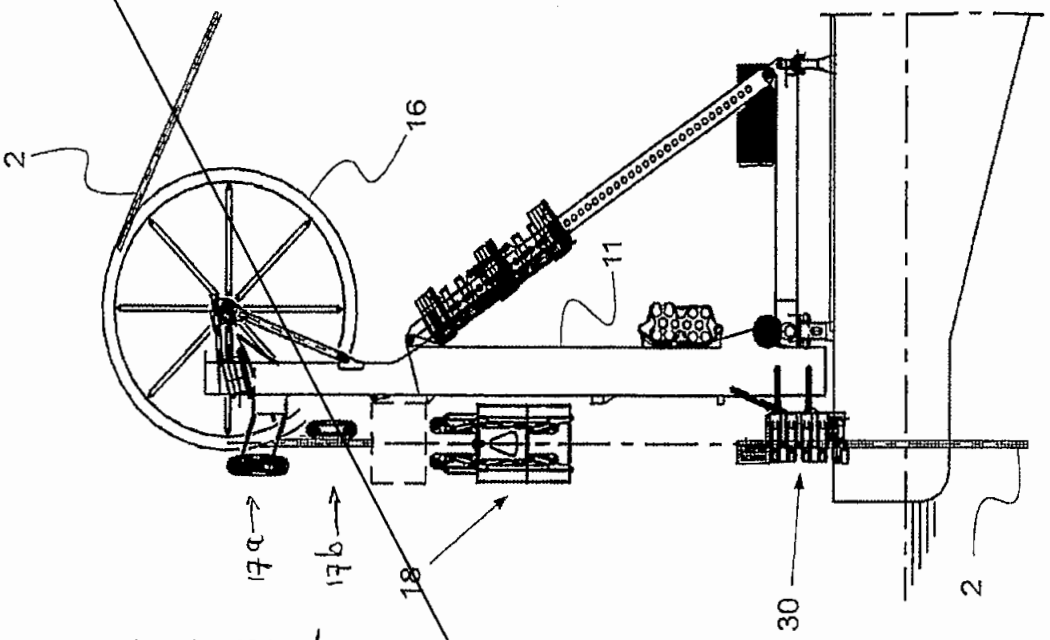

FIGURE 7b

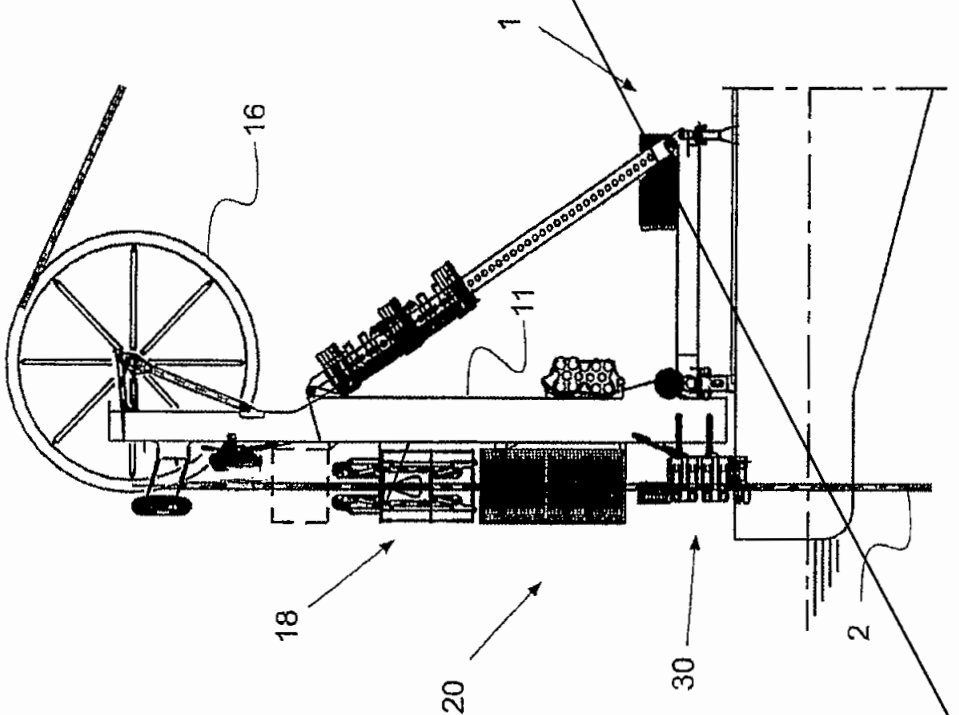

FIGURE 7a

FIGURE 7c

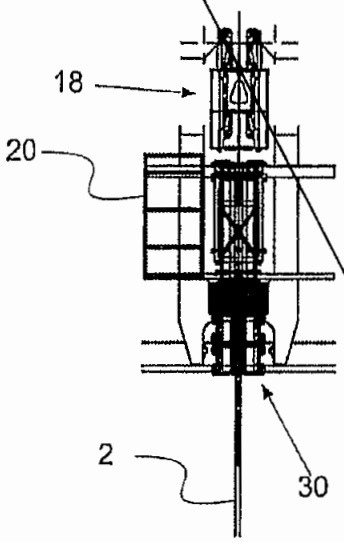

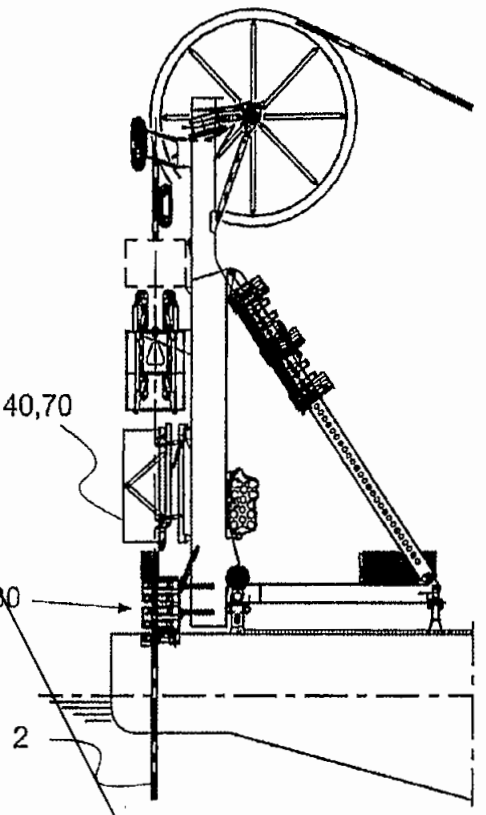

FIGURE 7d

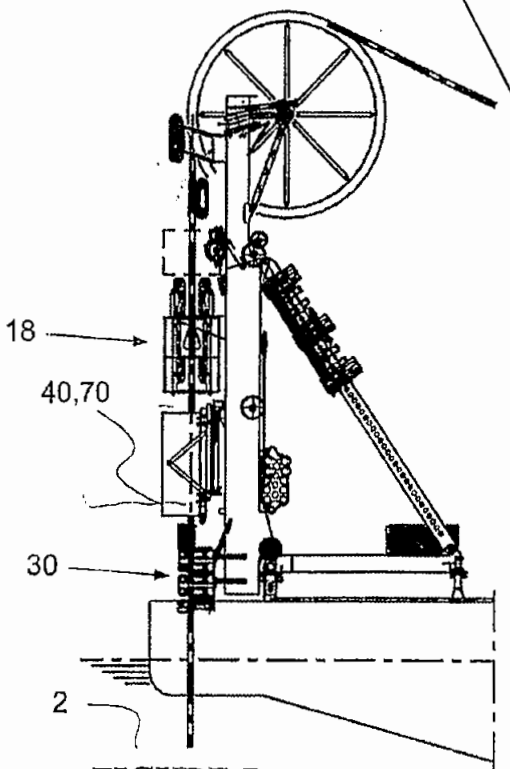

FIGURE 7e

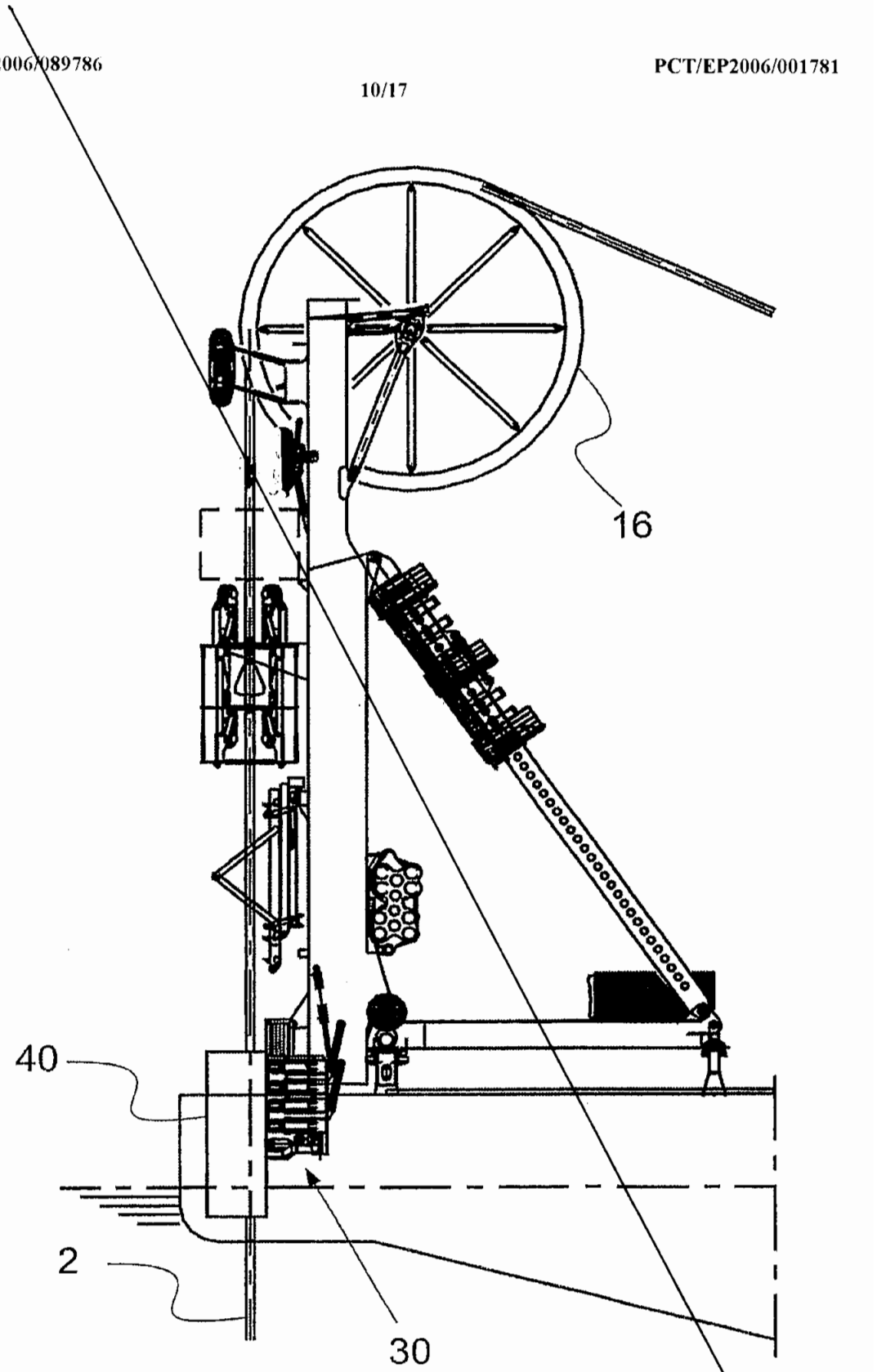

FIGURE 7f

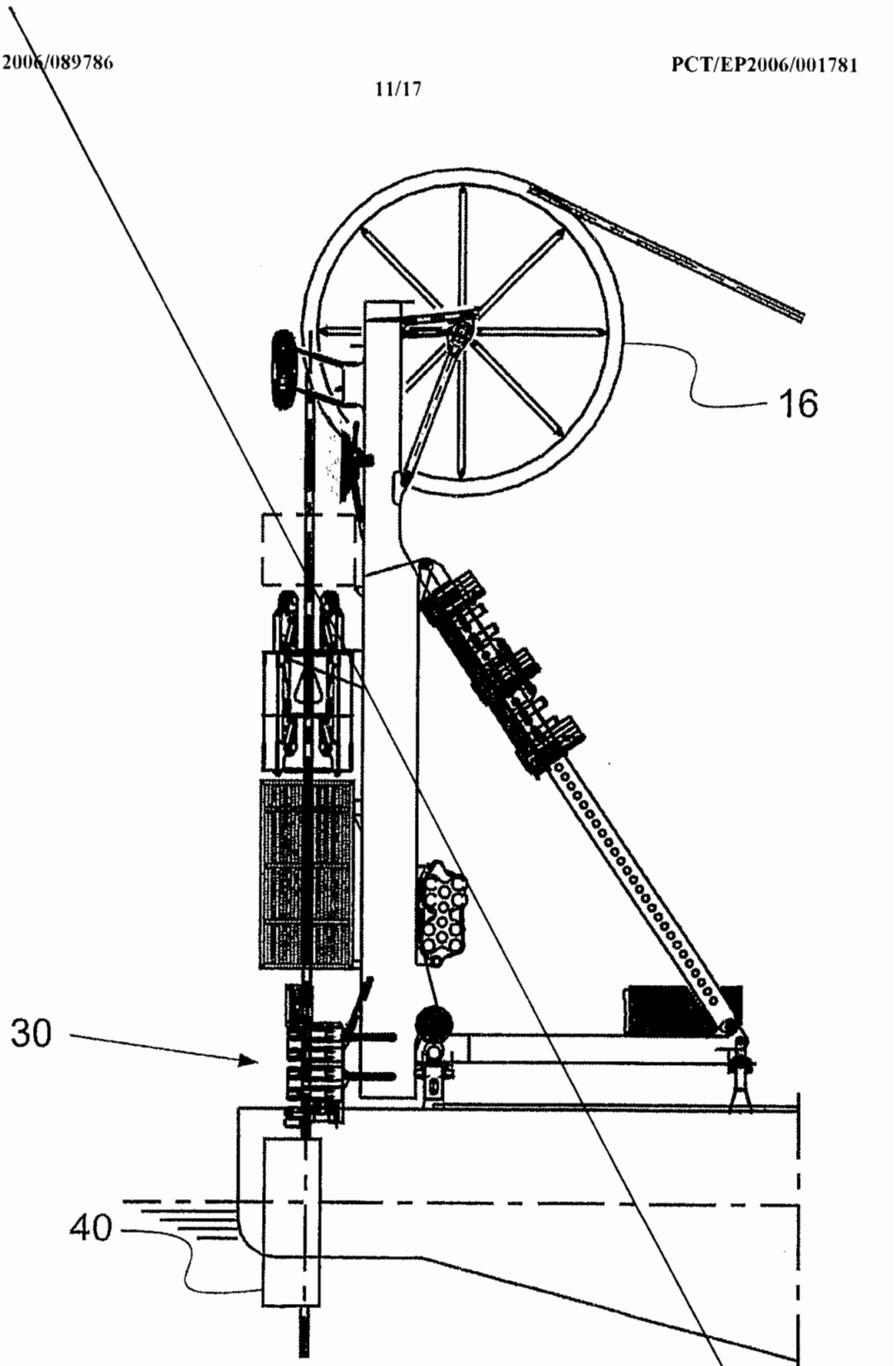

FIGURE 7g

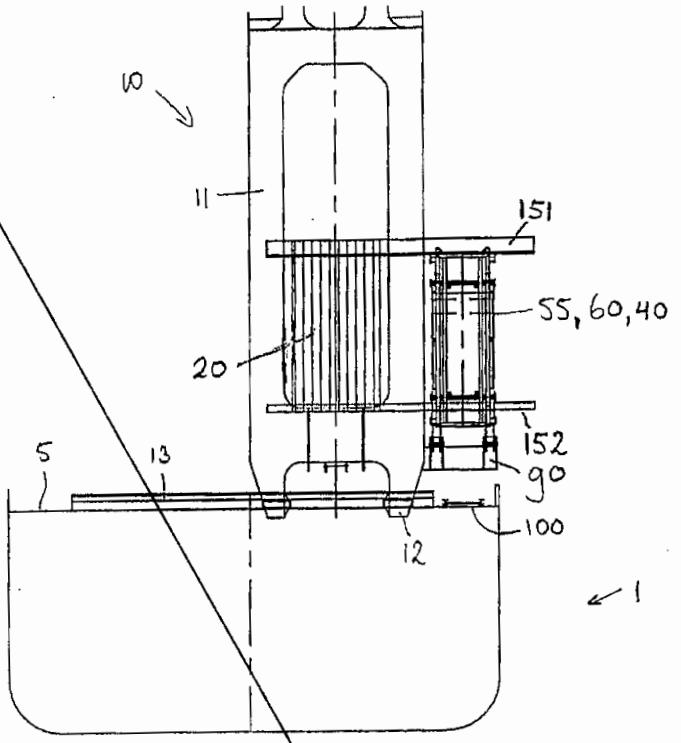
10
11
151
55, 60, 40
20
152
90
5
13
100
12
1

FIG 8A

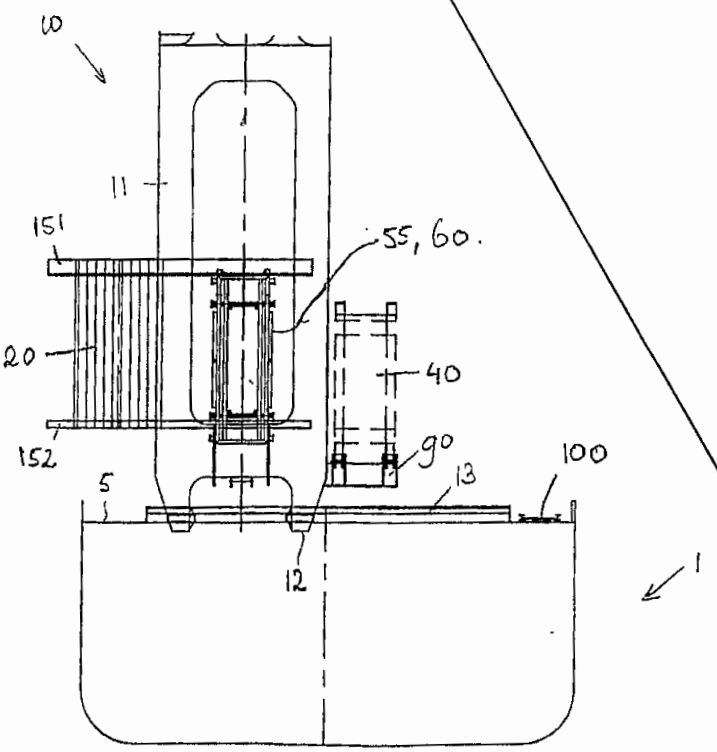
10
11
151
55, 60.
20
40
152
90
100
5
13
12
1

FIG 8B

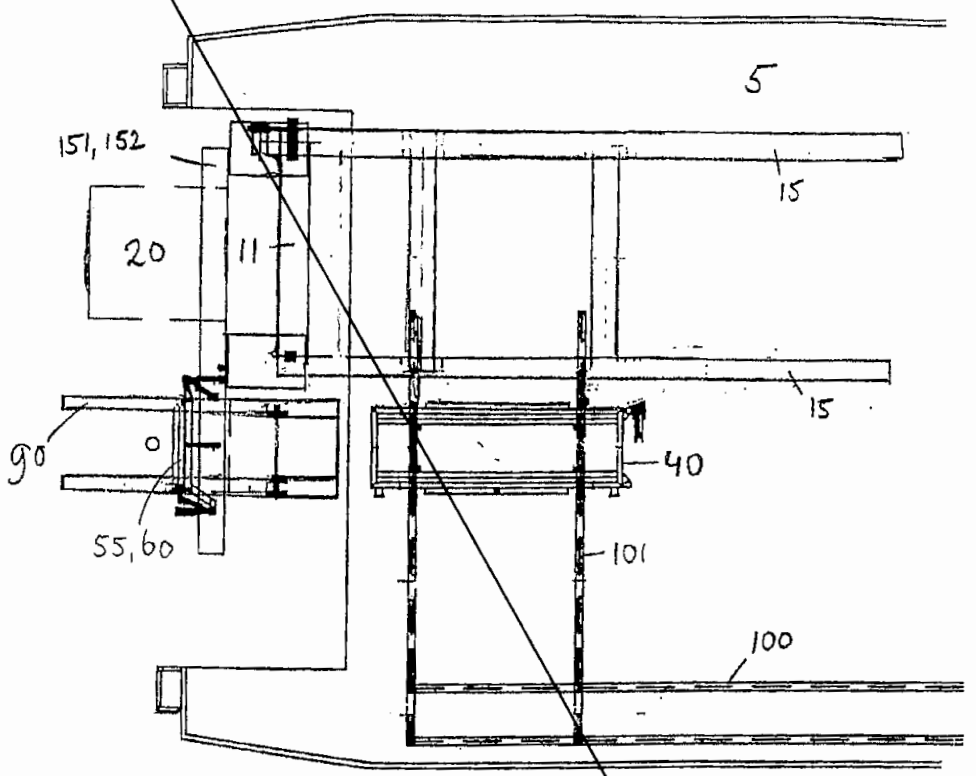
5
151, 152
15
20
11
15
90
0
40
55, 60
101
100

FIG 9A

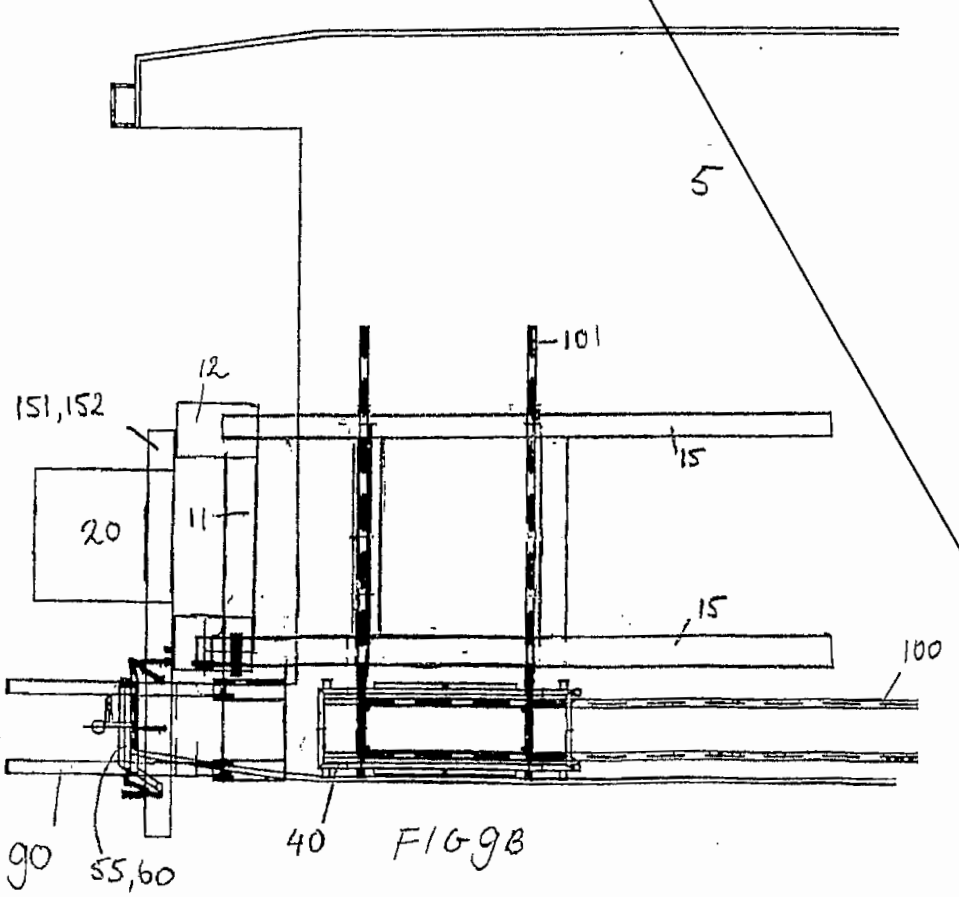
5
101
12
151, 152
15
20
11
15
100
90
55, 60
40

FIG 9B

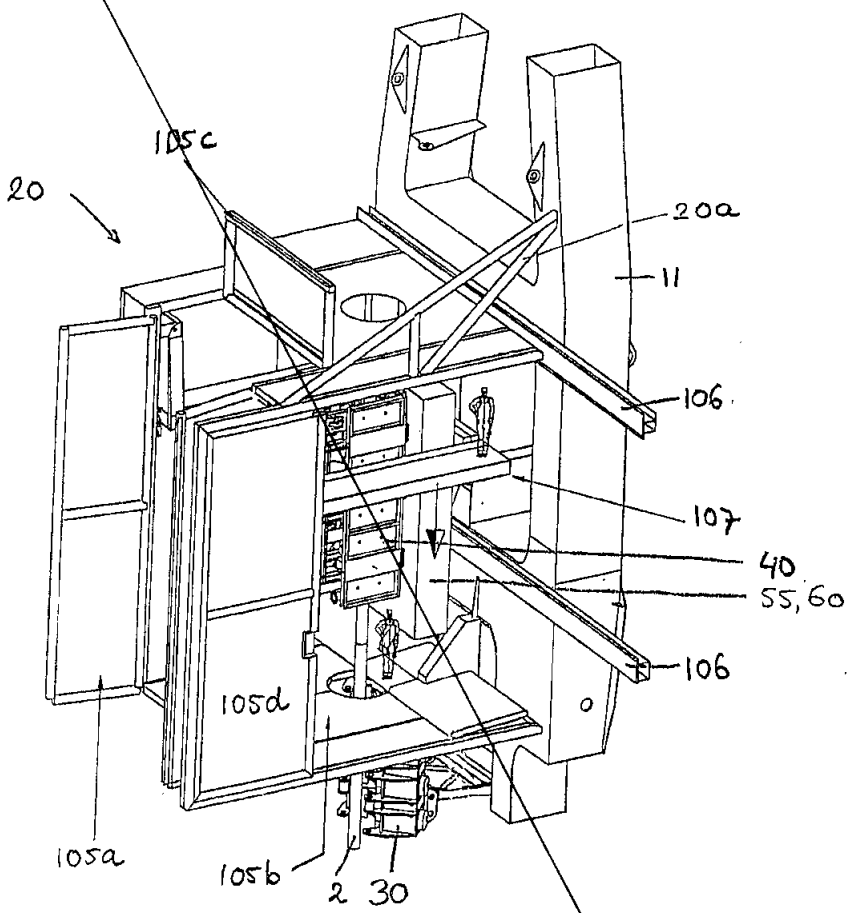

FIG 10

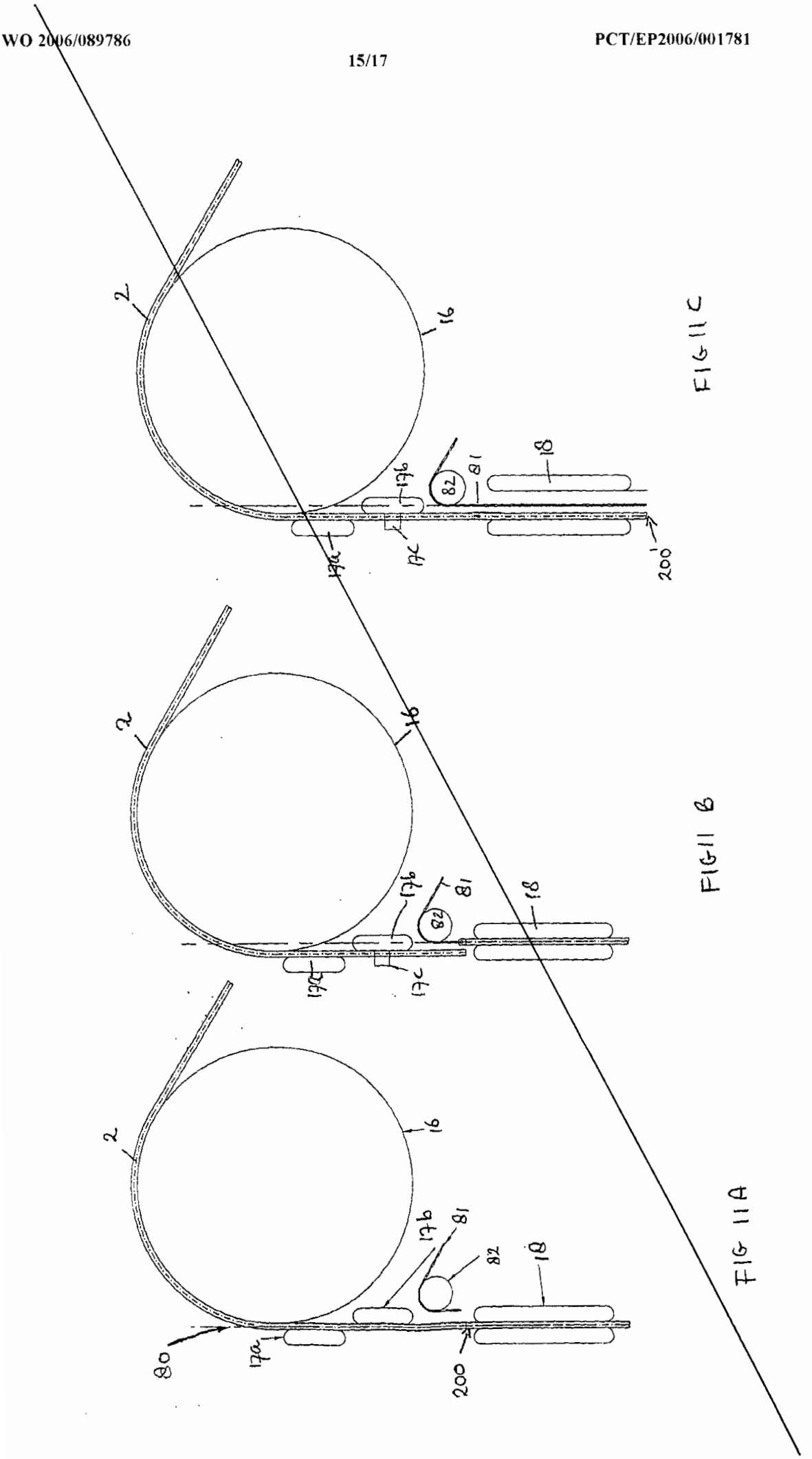

FIG 11C

FIG 11B

FIG 11A

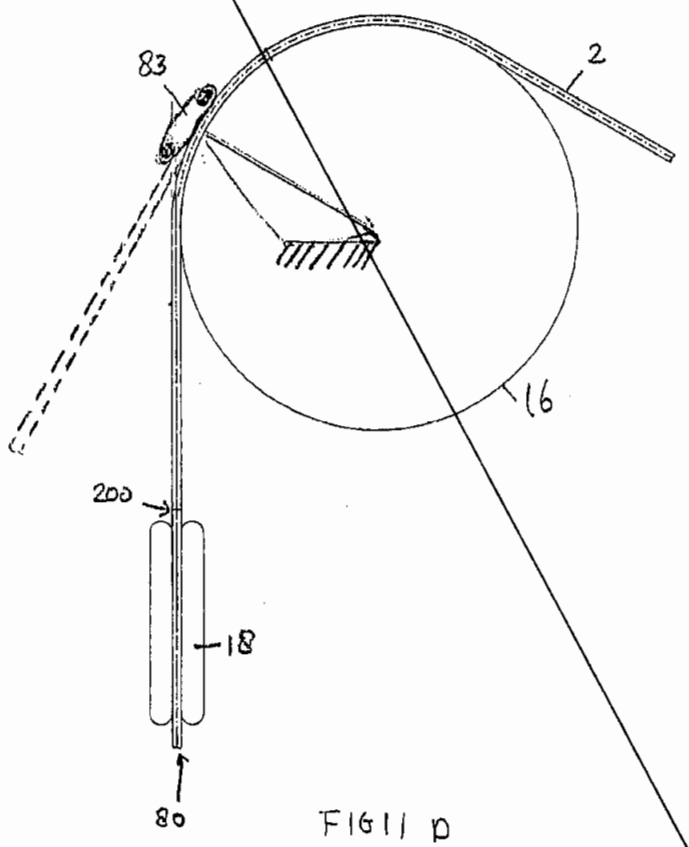

FIG 11 D

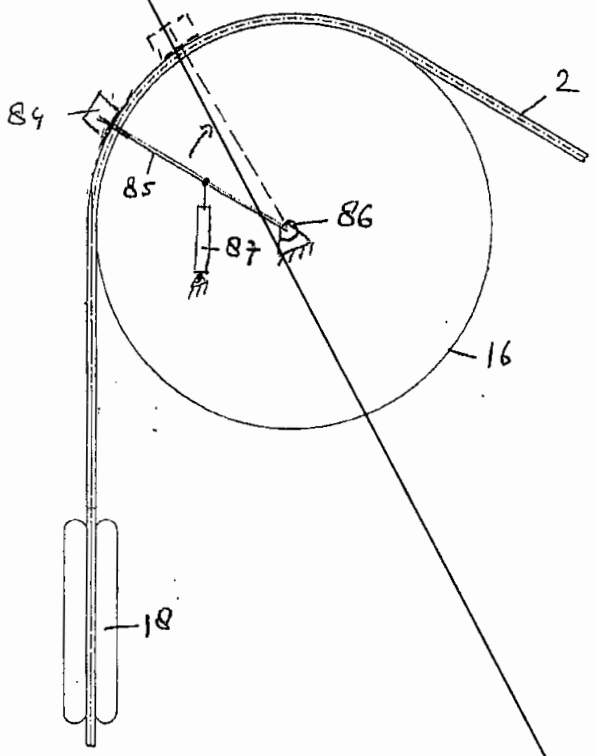

FIG 11. E

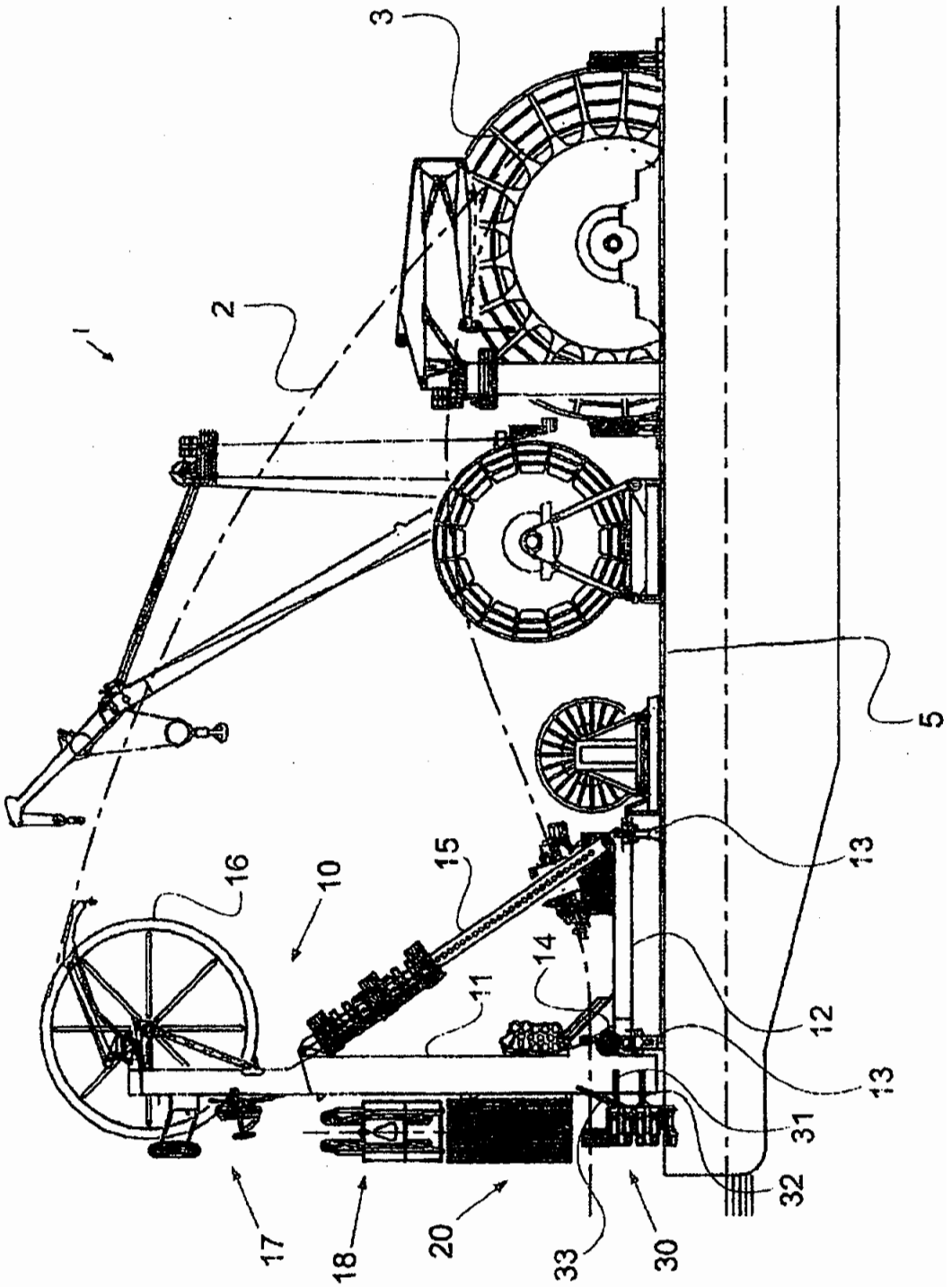

FIGURE 1

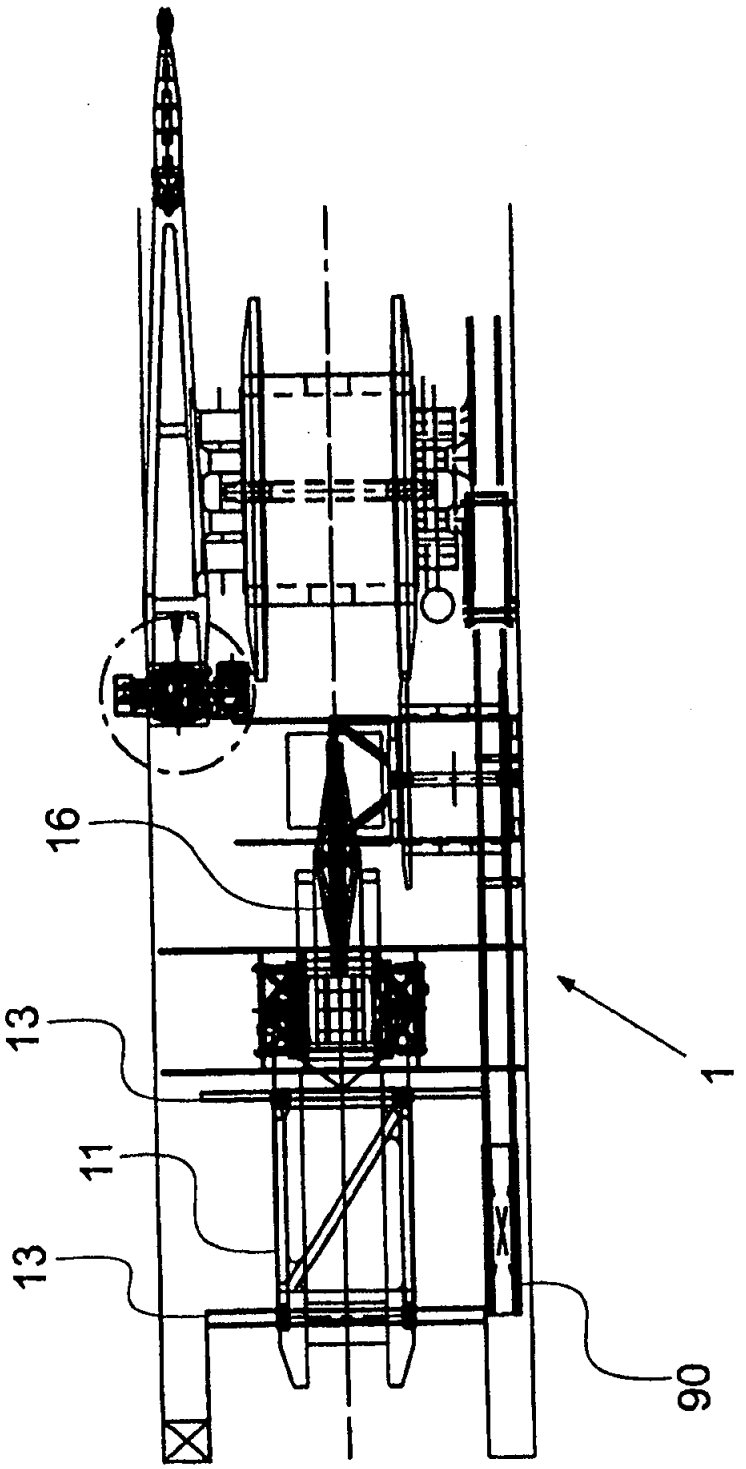

FIGURE 2

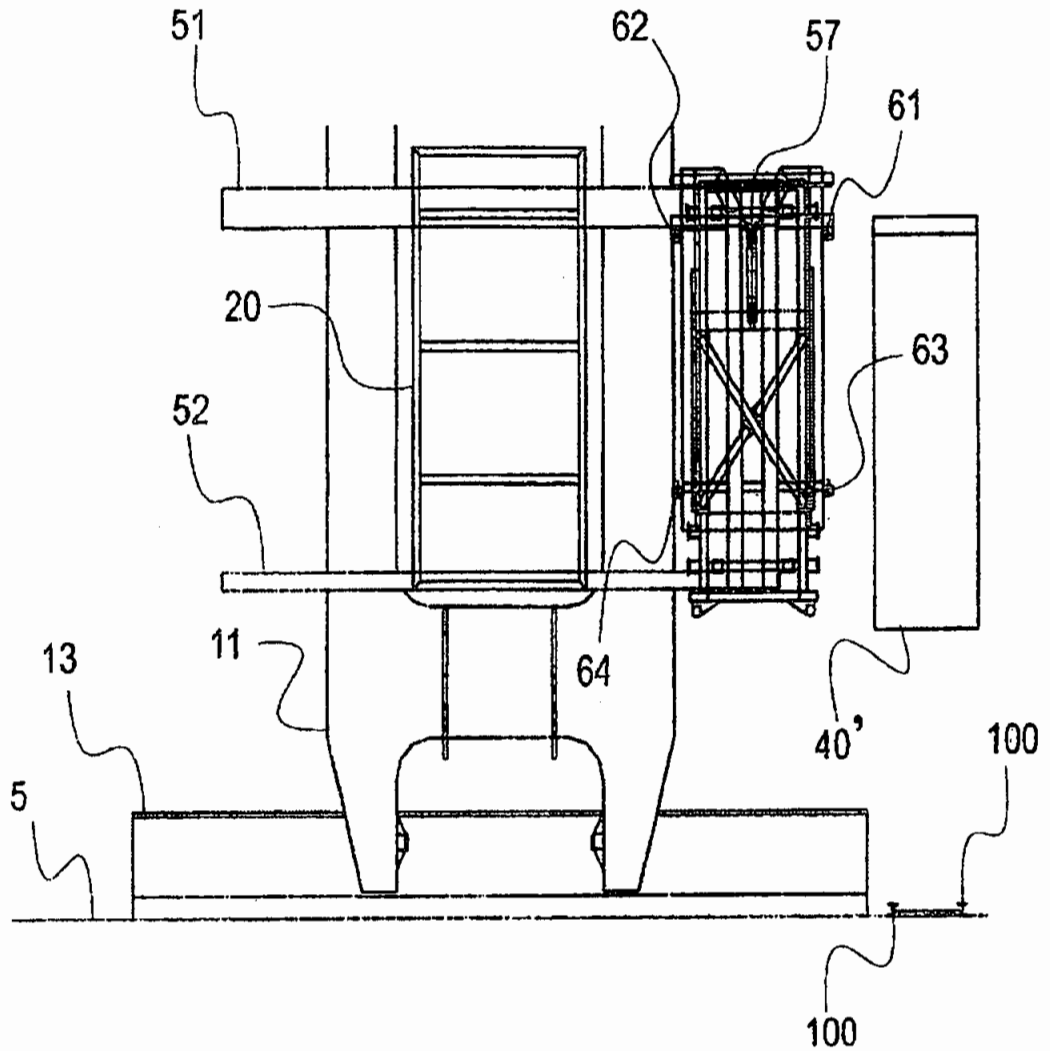

FIGURE 3

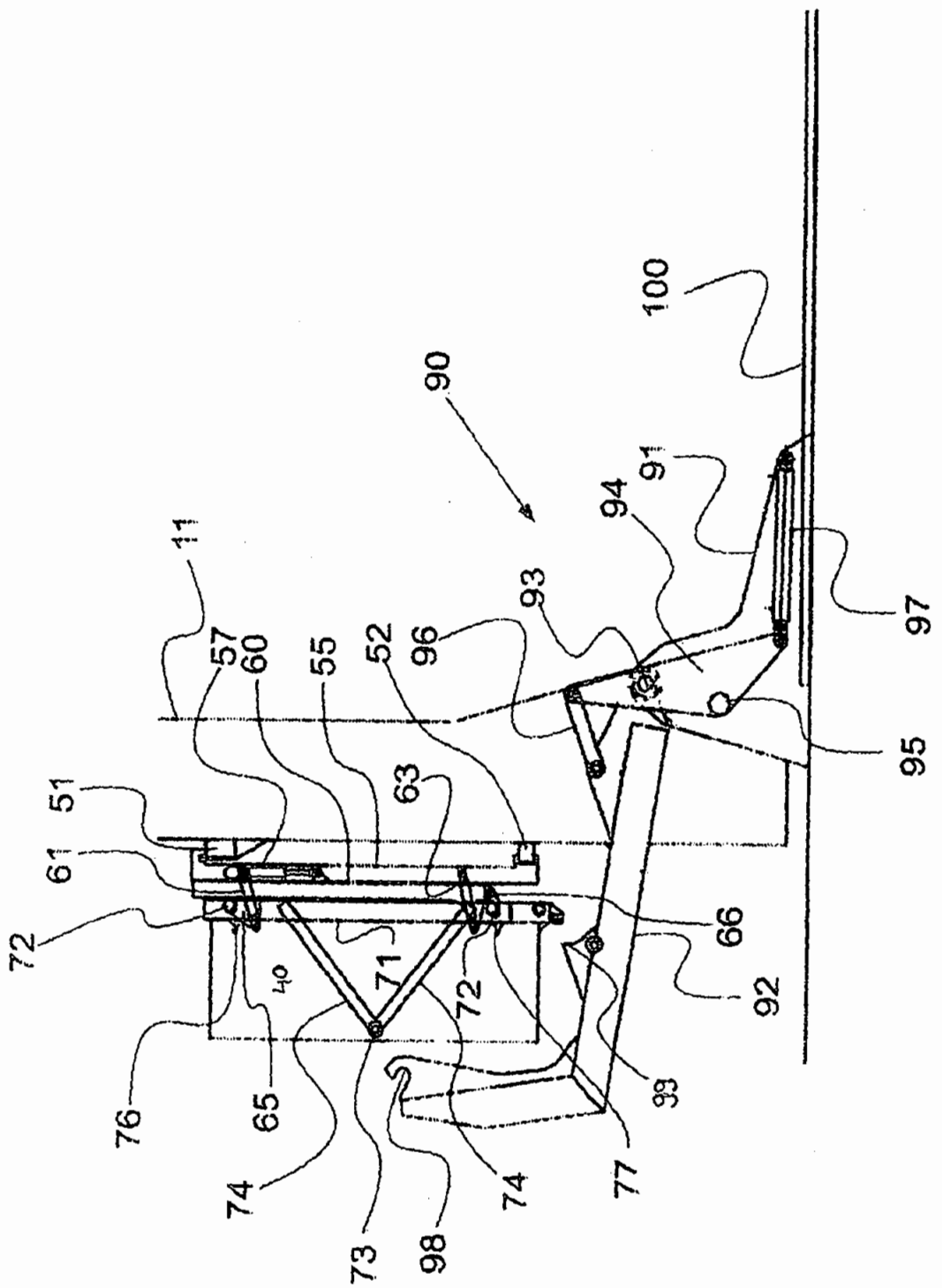
90
100
91
94
97
93
96
52
55
60
57
11
95
63
51
61
72
66
71
72
92
40
76
65
74
73
98
74
77
99

FIGURE 4

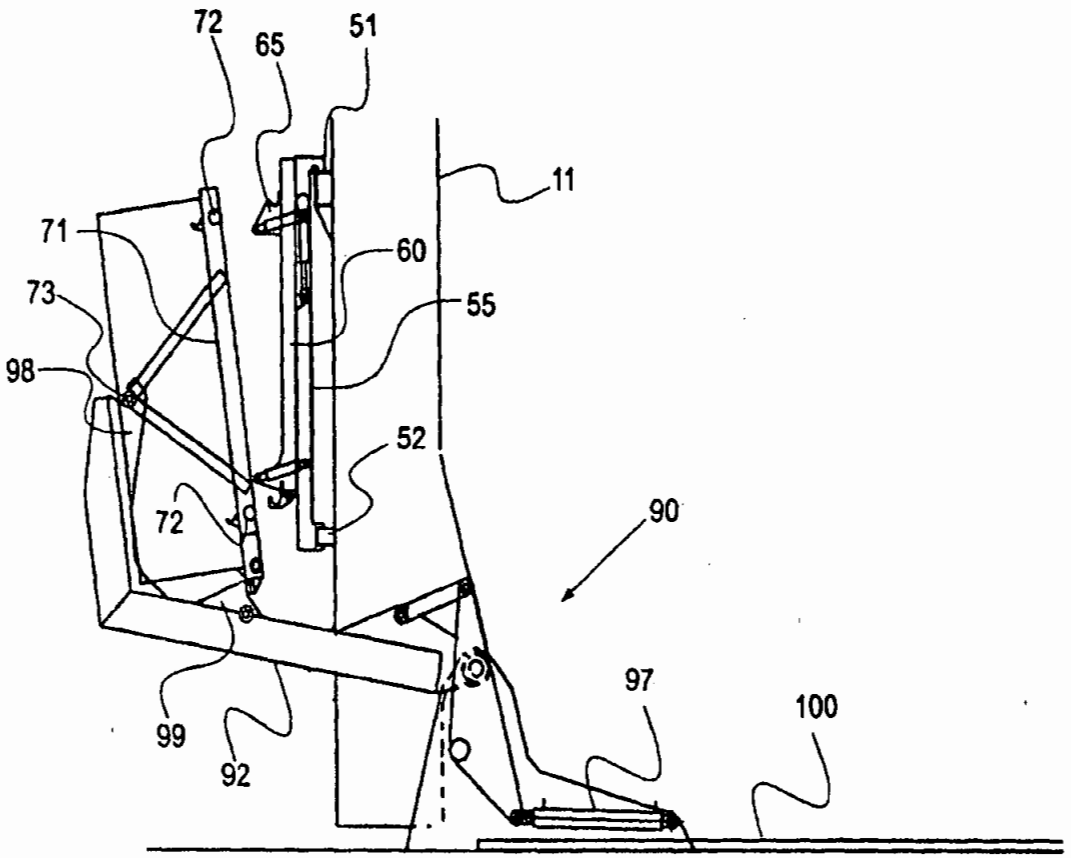

FIGURE 5

FIGURE 6a

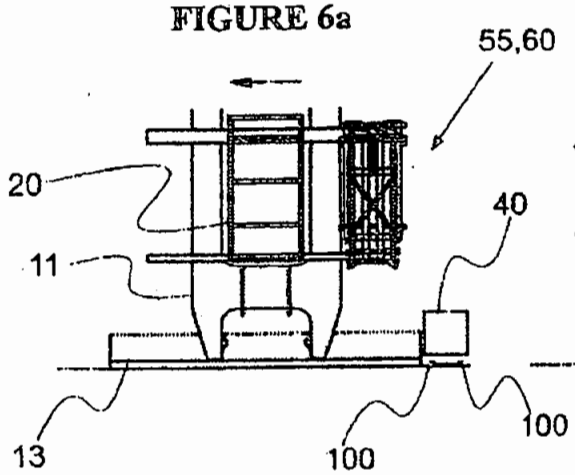

FIGURE 6b

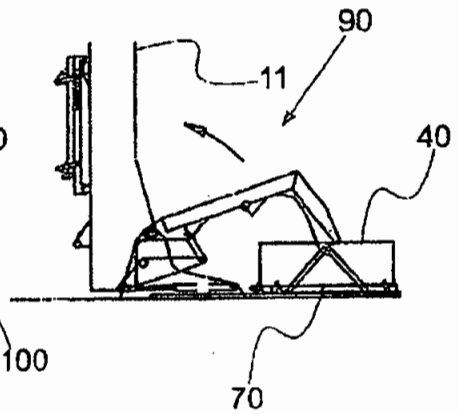

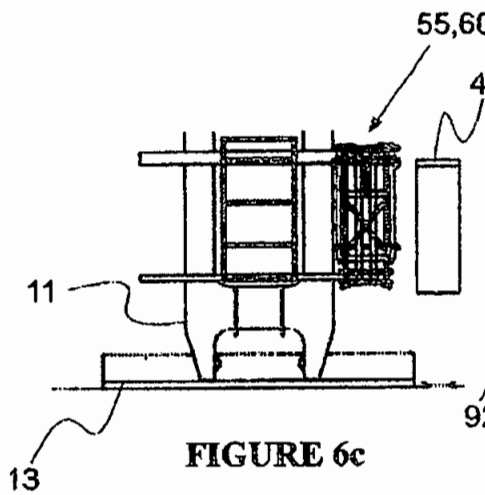

FIGURE 6c

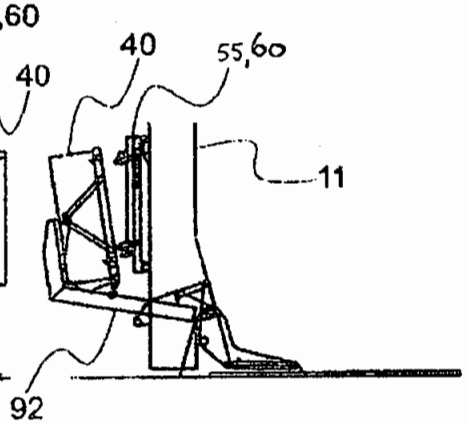

FIGURE 6d

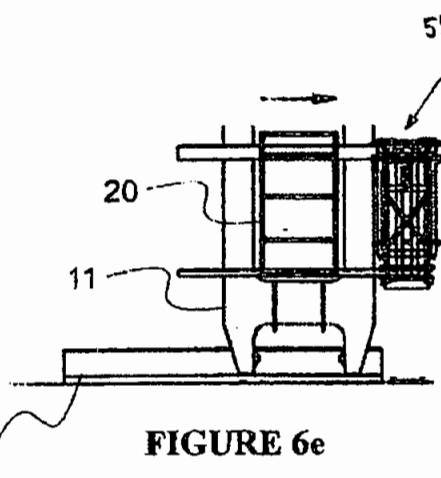

FIGURE 6e

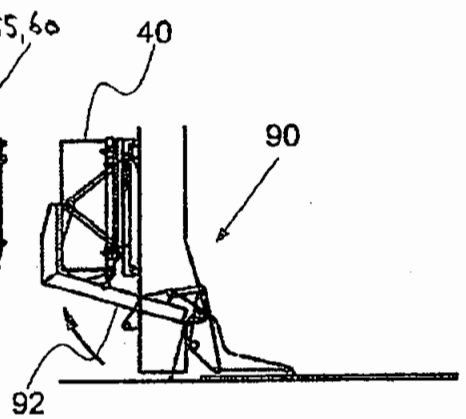

FIGURE 6f

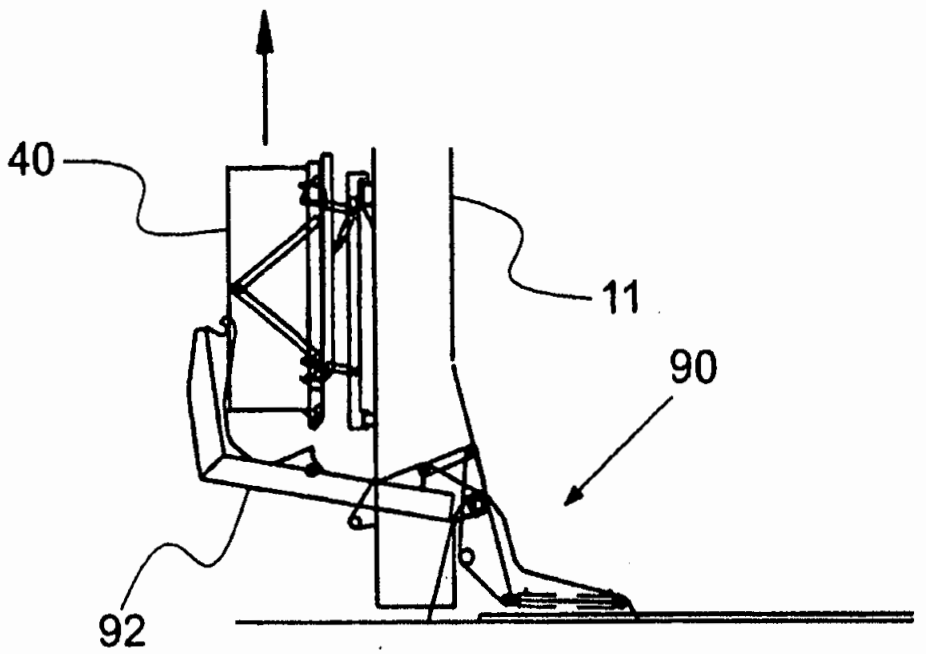

FIGURE 6g

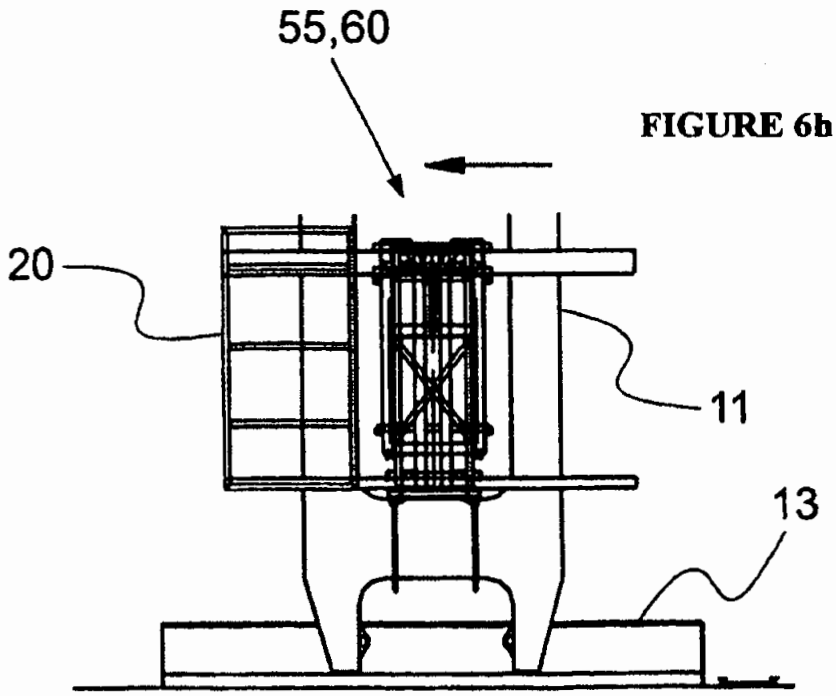

FIGURE 6h

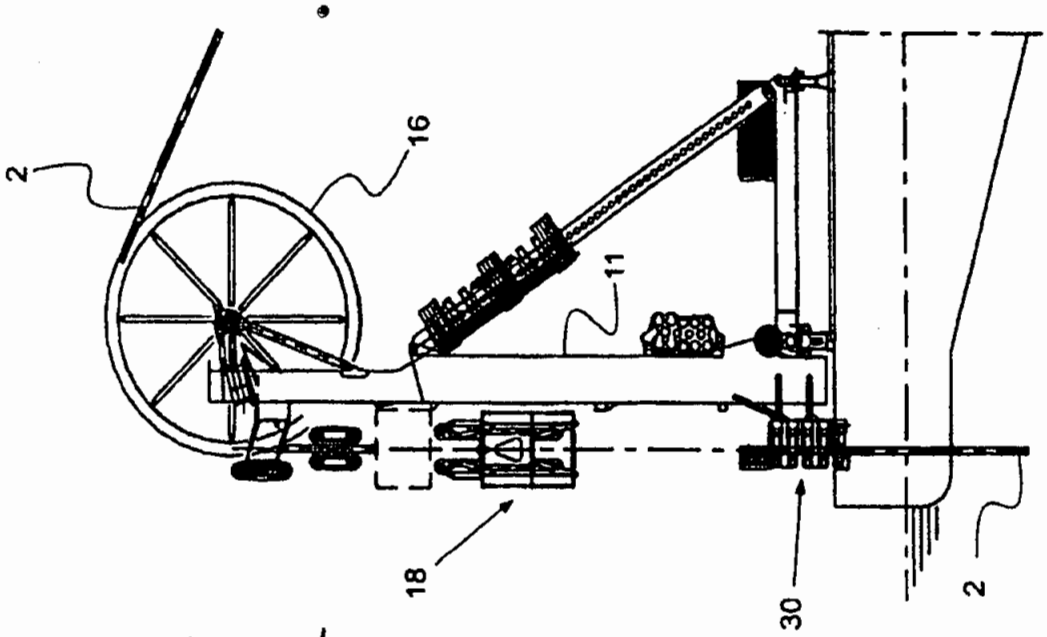

FIGURE 7b

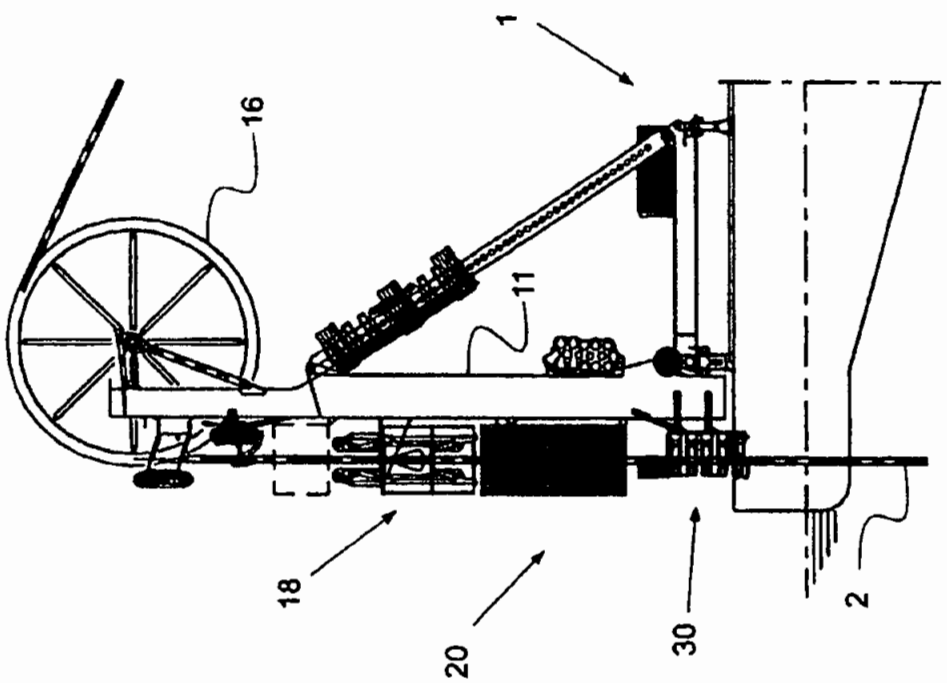

FIGURE 7a

FIGURE 7c

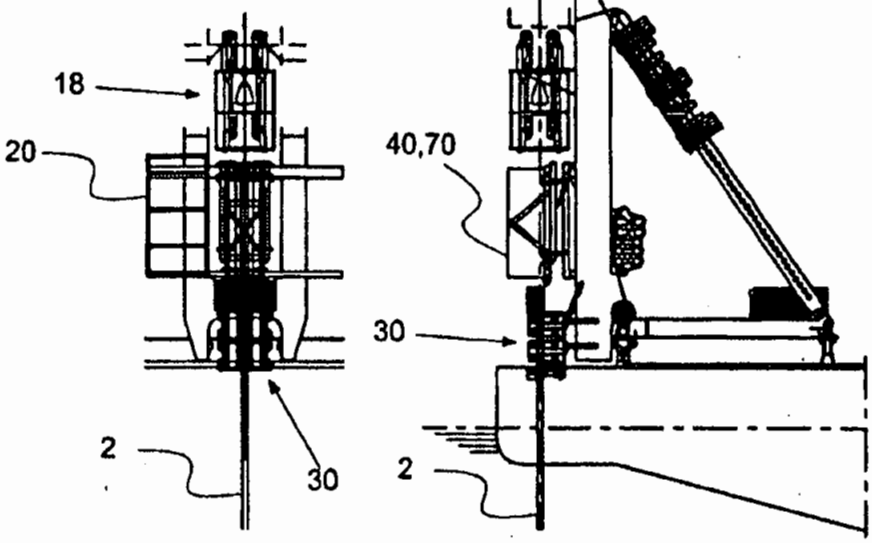

FIGURE 7d

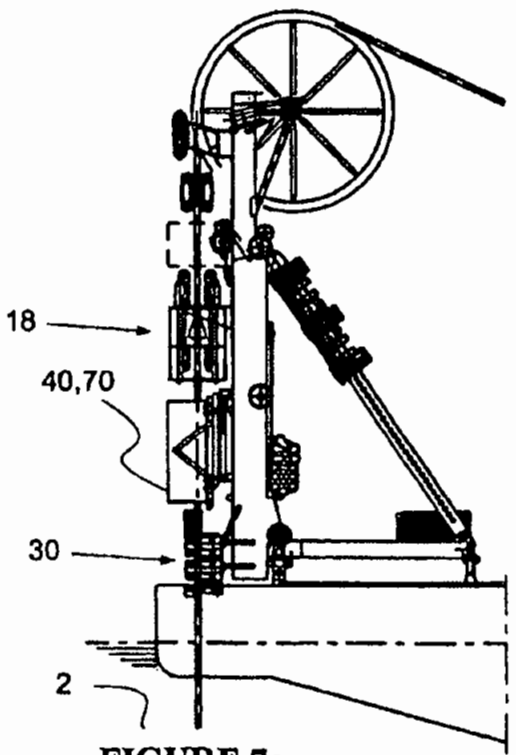

FIGURE 7e

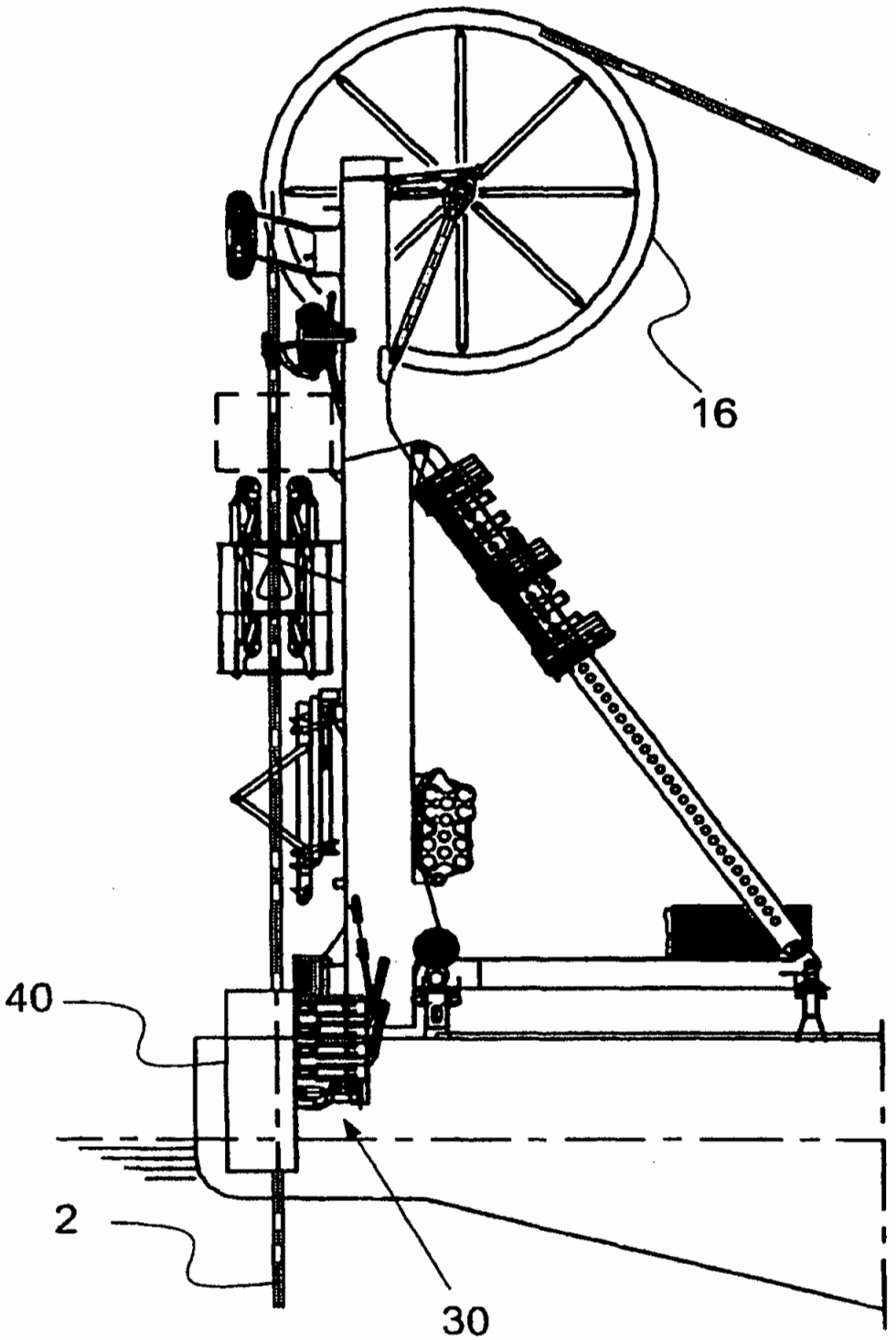

FIGURE 7f

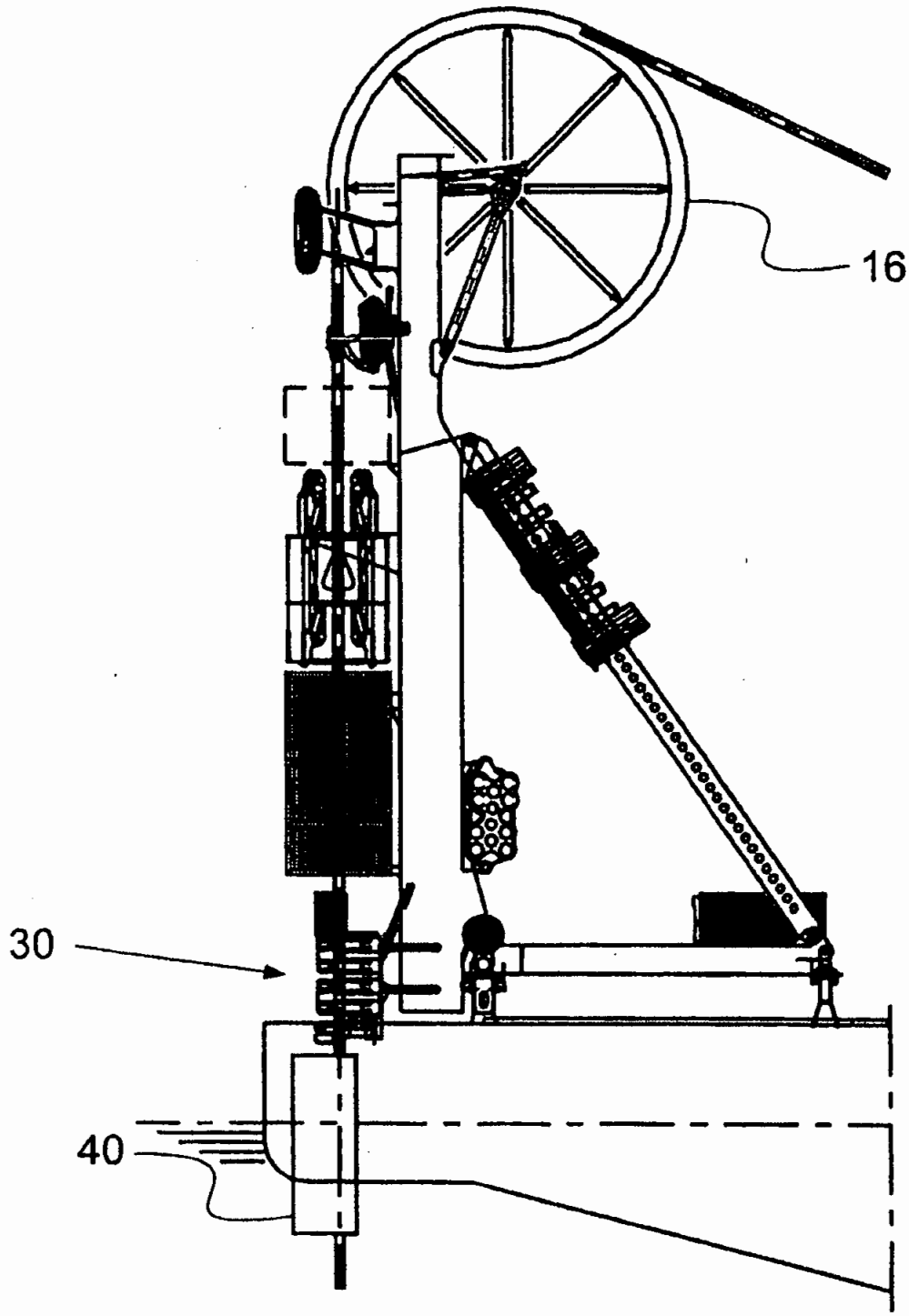

FIGURE 7g