Fig. 1

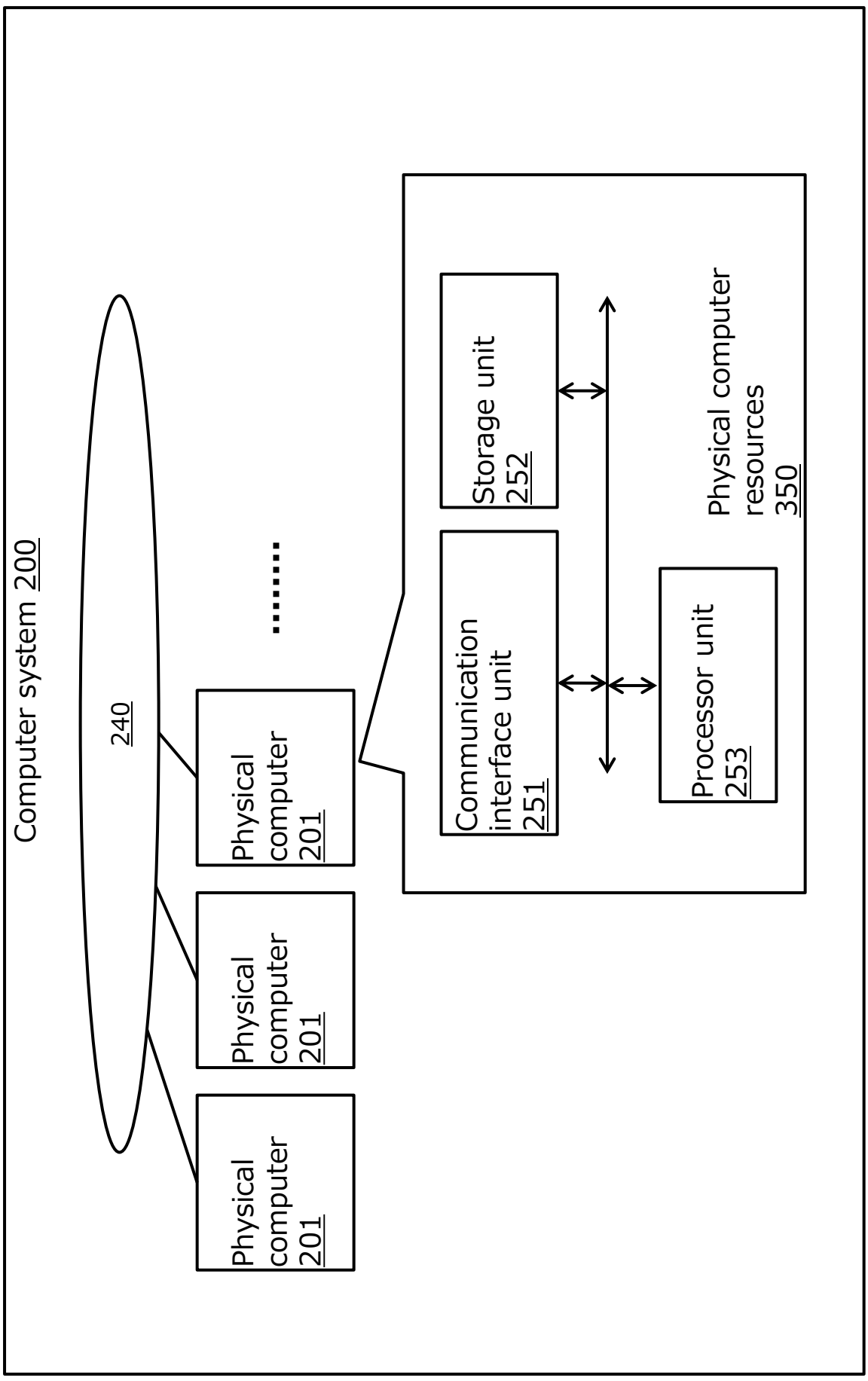
Computer system 200
240
Physical computer 201
Physical computer 201
Physical computer 201
Physical computer resources 350
Storage unit 252
Communication interface unit 251
Processor unit 253

Fig. 2

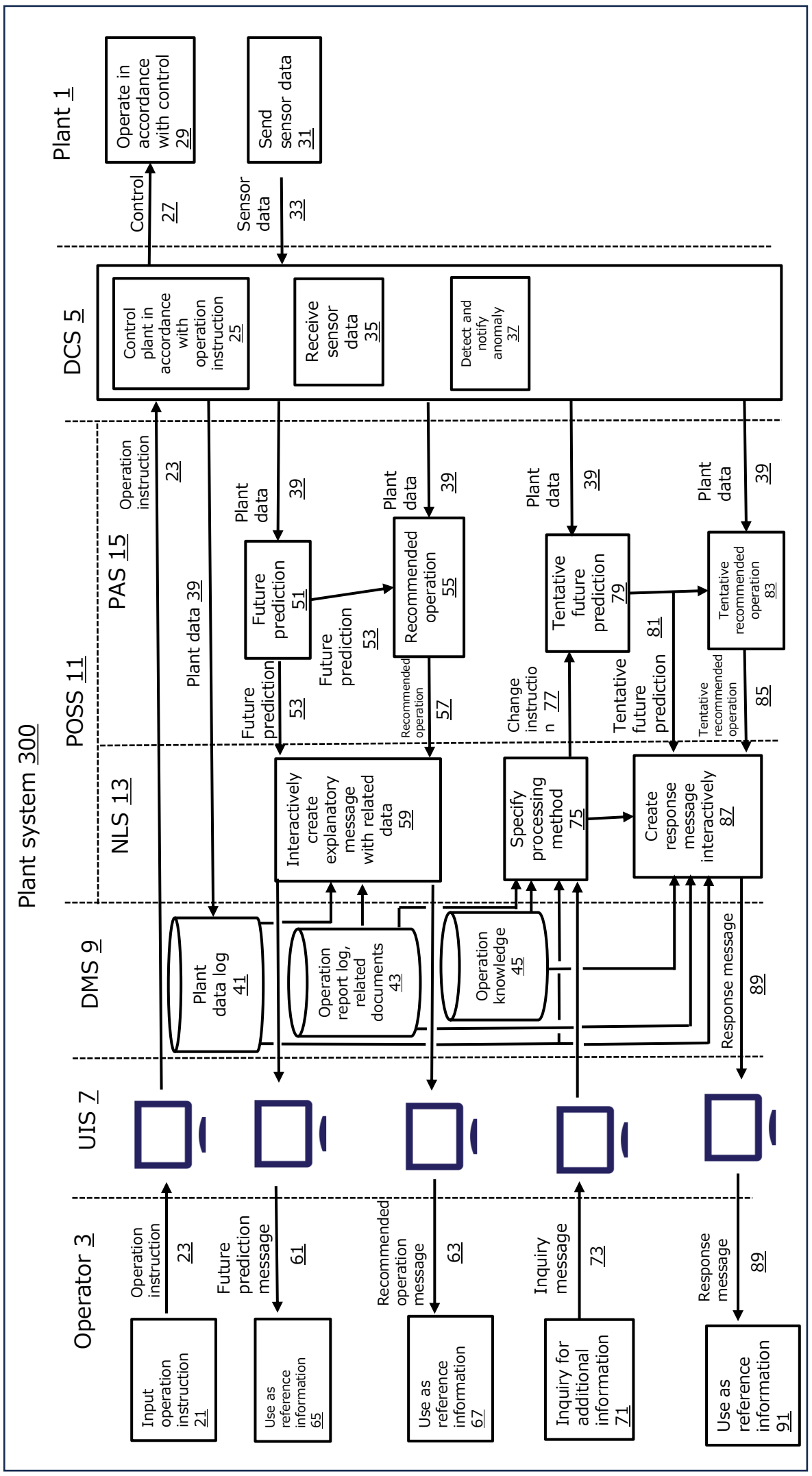
Plant system 300
Operator 3
UIS 7
DMS 9
NLS 13
POSS 11
PAS 15
DCS 5
Plant 1
Input operation instruction 21
Operation instruction 23
Use as reference information 65
Future prediction message 61
Use as reference information 67
Recommended operation message 63
Inquiry for additional information 71
Inquiry message 73
Use as reference information 91
Response message 89
Plant data log 41
Operation report log, related documents 43
Operation knowledge 45
Interactively create explanatory message with related data 59
Specify processing method 75
Create response message interactively 87
Future prediction 51
Recommended operation 55
Tentative future prediction 79
Tentative recommended operation 83
Control plant in accordance with operation instruction 25
Receive sensor data 35
Detect and notify anomaly 37
Operate in accordance with control 29
Send sensor data 31
Control 27
Sensor data 33
Plant data 39
Future prediction 53
Recommended operation 57
Change instruction 77
Tentative future prediction 81
Tentative recommended operation 85

Fig. 3

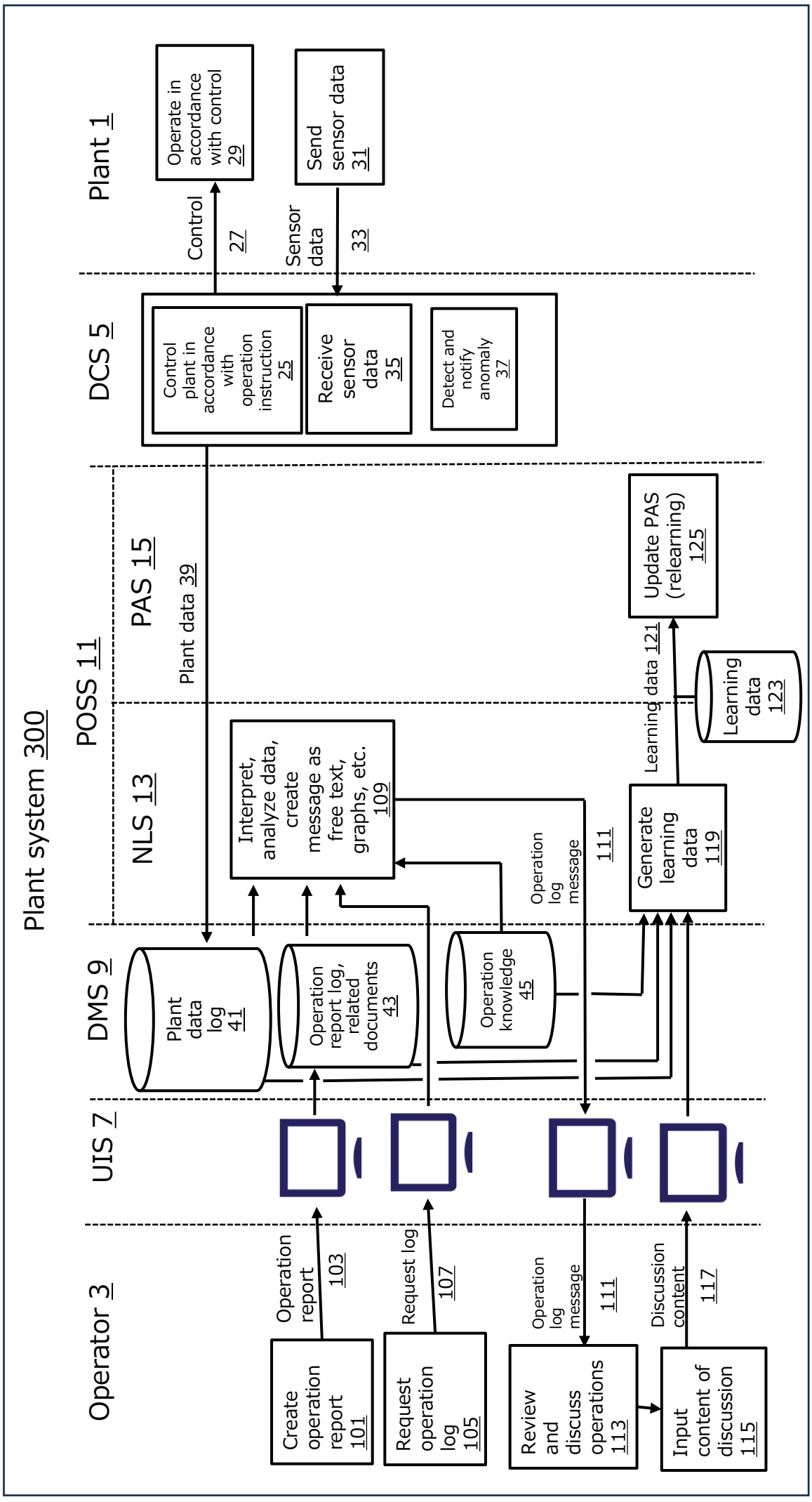
Plant system 300
Operator 3
UIS 7
DMS 9
POSS 11
NLS 13
PAS 15
DCS 5
Plant 1
Create operation report 101
Request operation log 105
Review and discuss operations 113
Input content of discussion 115
Operation report 103
Request log 107
Operation log message 111
Discussion content 117
Plant data log 41
Operation report log, related documents 43
Operation knowledge 45
Interpret, analyze data, create message as free text, graphs, etc. 109
Generate learning data 119
Learning data 123
Update PAS (relearning) 125
Learning data 121
Plant data 39
Control plant in accordance with operation instruction 25
Receive sensor data 35
Detect and notify anomaly 37
Control 27
Sensor data 33
Operate in accordance with control 29
Send sensor data 31

Fig. 4

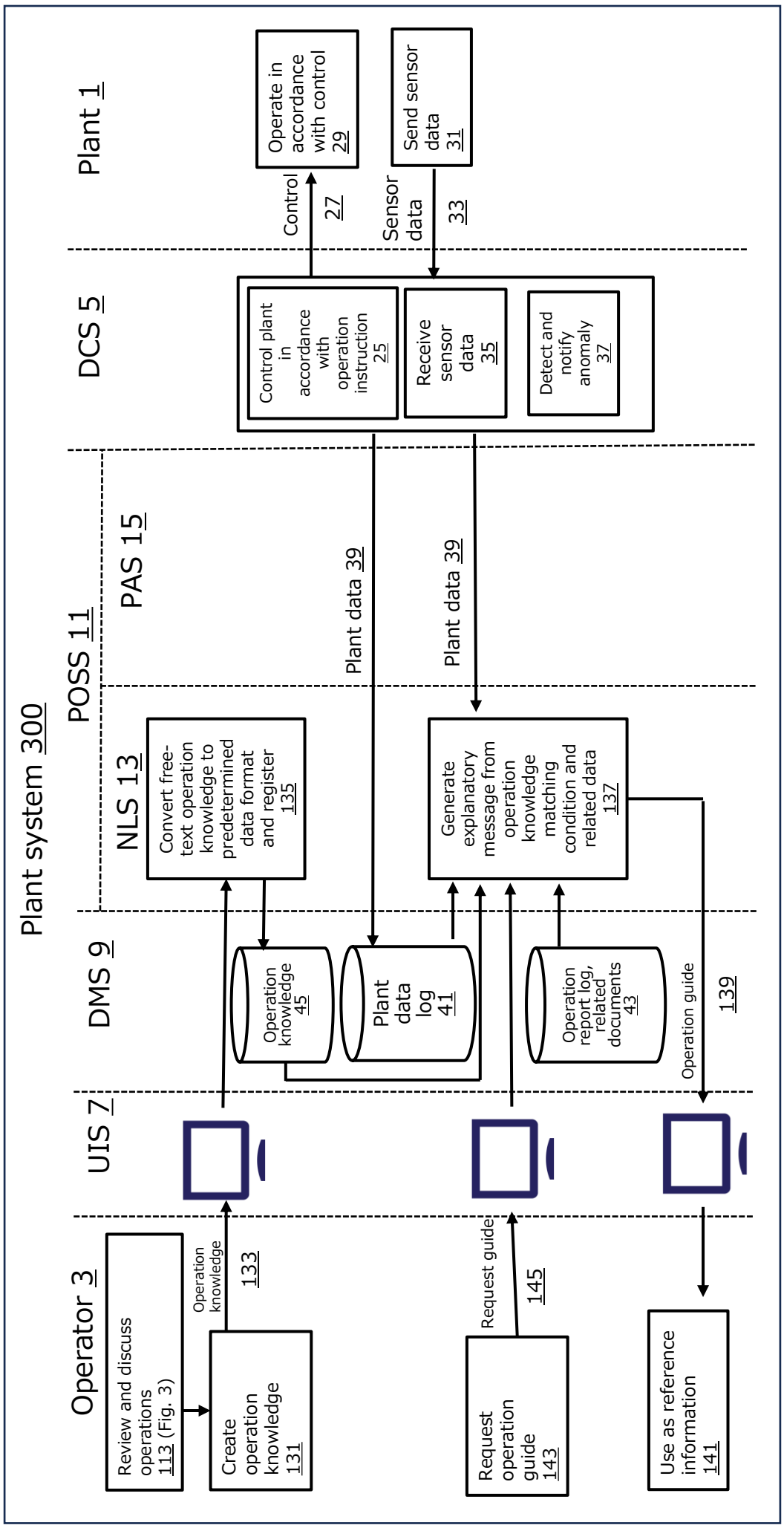
Plant system 300
Operator 3
UIS 7
DMS 9
POSS 11
NLS 13
PAS 15
DCS 5
Plant 1
Review and discuss operations 113 (Fig. 3)
Create operation knowledge 131
Operation knowledge 133
Request operation guide 143
Request guide 145
Use as reference information 141
Operation knowledge 45
Plant data log 41
Operation report log, related documents 43
Convert free-text operation knowledge to predetermined data format and register 135
Generate explanatory message from operation knowledge matching condition and related data 137
Operation guide 139
Plant data 39
Plant data 39
Control plant in accordance with operation instruction 25
Receive sensor data 35
Detect and notify anomaly 37
Control 27
Sensor data 33
Operate in accordance with control 29
Send sensor data 31

Fig. 5

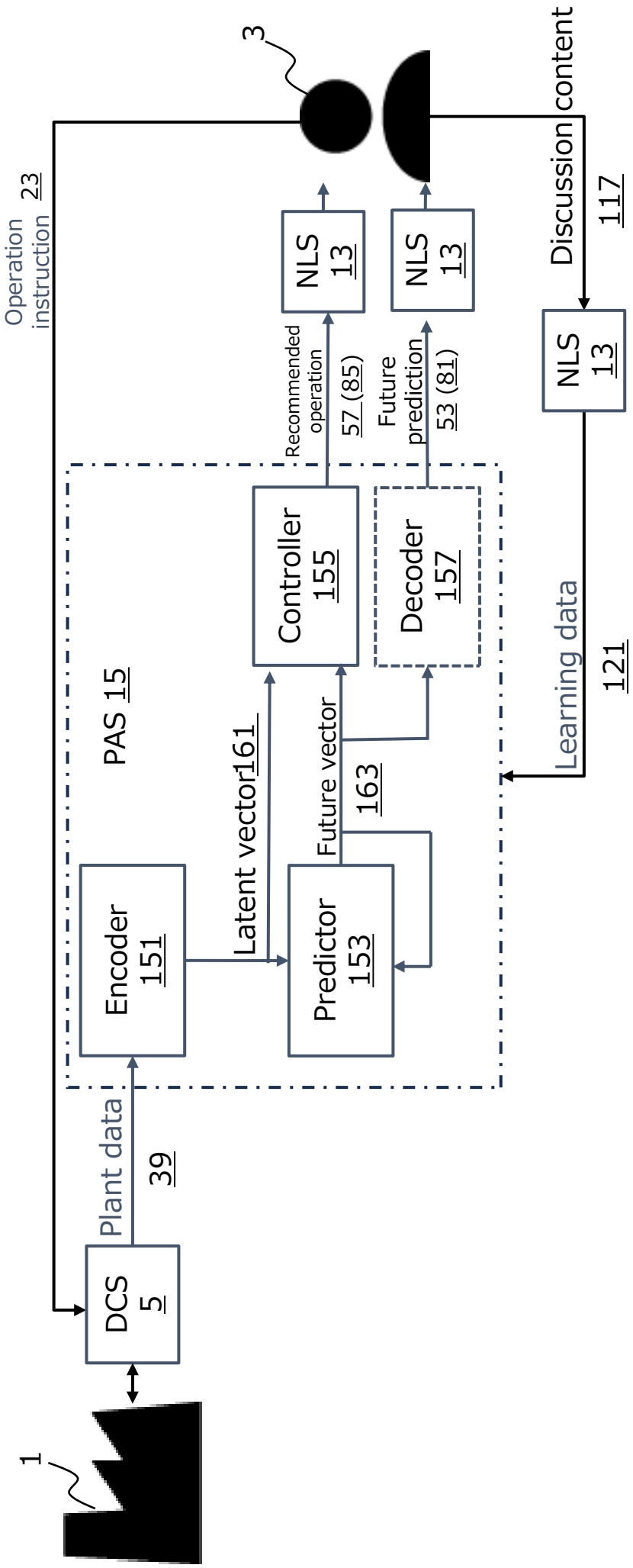
3
Discussion content
117
Operation instruction 23
NLS 13
NLS 13
NLS 13
Recommended operation
57 (85)
Future prediction
53 (81)
Controller 155
Decoder 157
PAS 15
Latent vector161
Future vector 163
Learning data
121
Encoder 151
Predictor 153
Plant data
39
DCS 5
1

Fig. 6

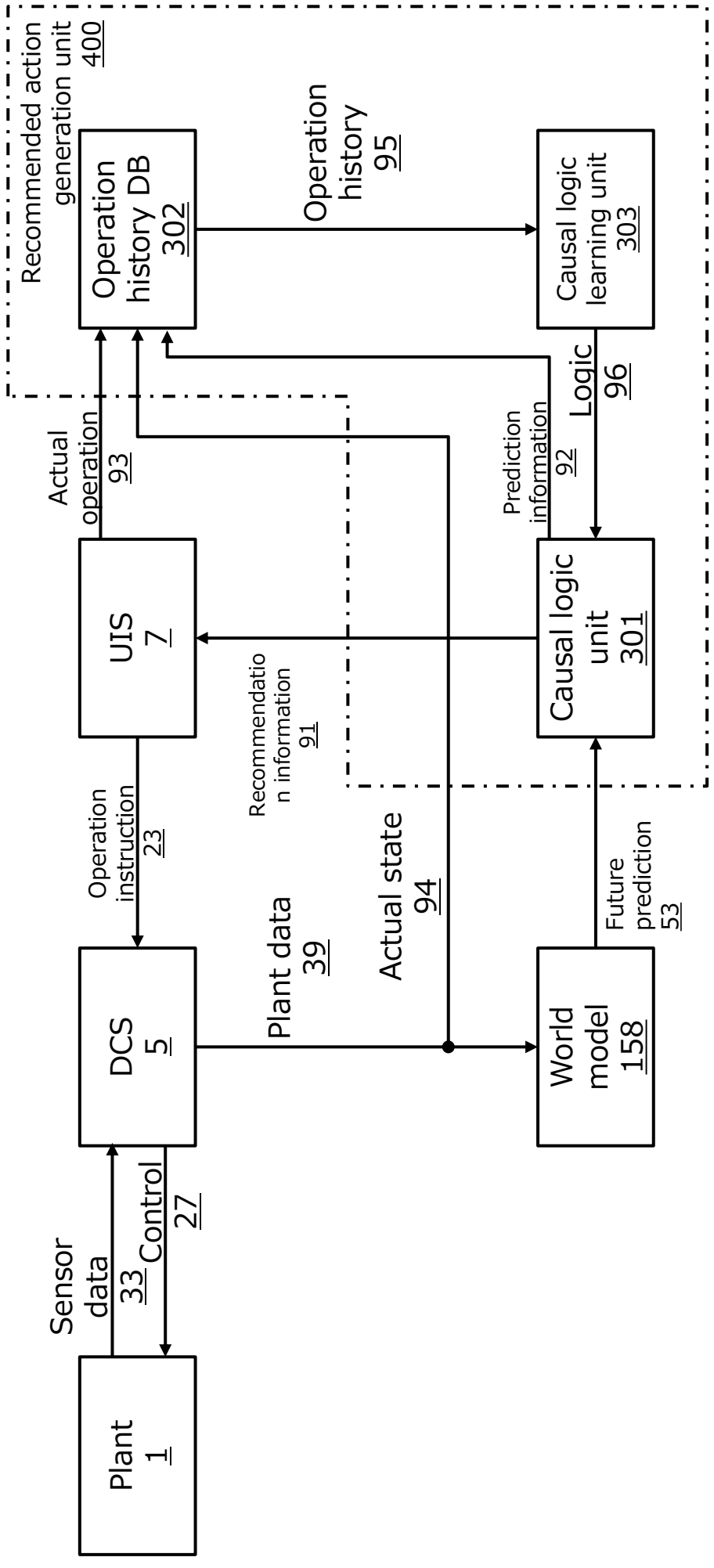
Recommended action generation unit 400
Operation history DB 302
Operation history 95
Causal logic learning unit 303
Logic 96
Actual operation 93
Prediction information 92
UIS 7
Causal logic unit 301
Recommendation information 91
Operation instruction 23
Plant data 39
Actual state 94
Future prediction 53
DCS 5
World model 158
Sensor data 33
Control 27
Plant 1

Fig. 7

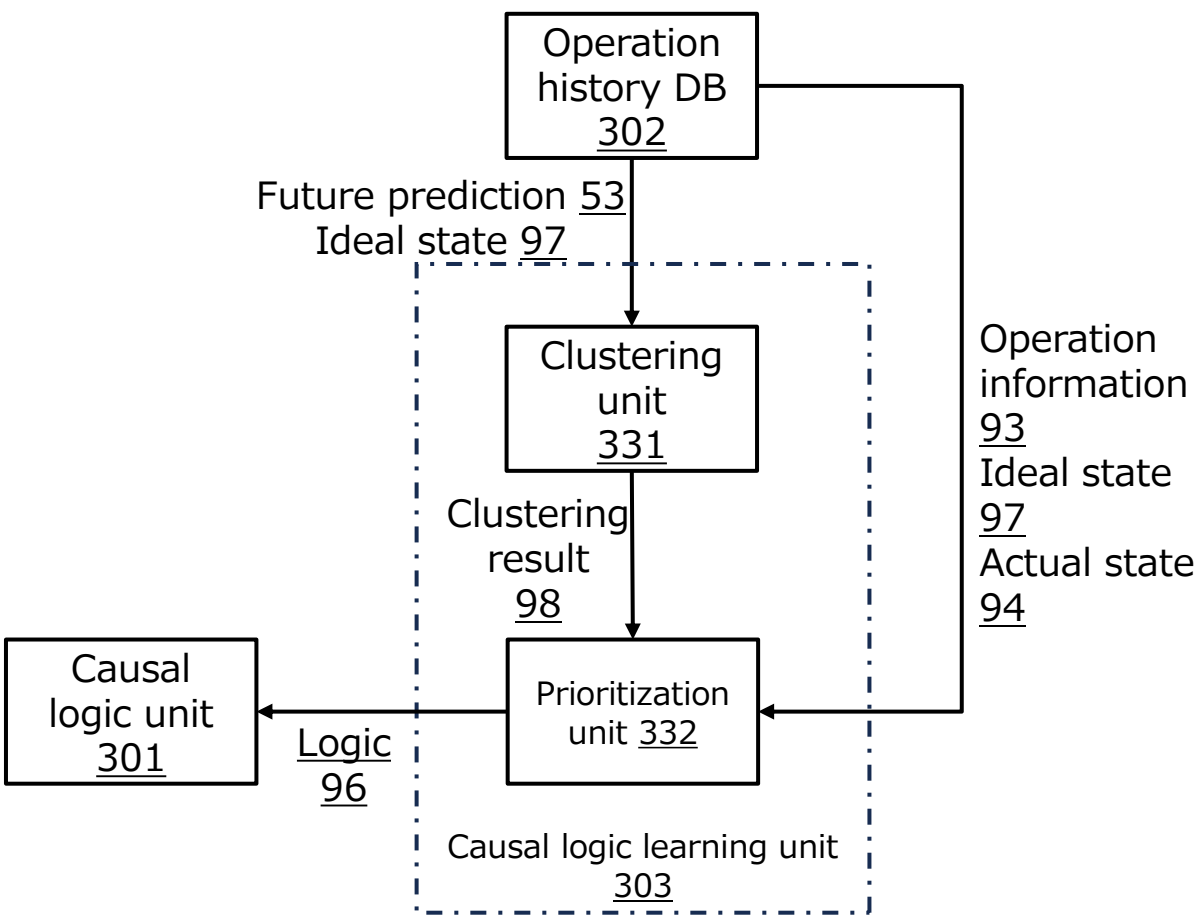
Operation history DB 302
Future prediction 53
Ideal state 97
Clustering unit 331
Clustering result 98
Operation information 93
Ideal state 97
Actual state 94
Causal logic unit 301
Logic 96
Prioritization unit 332
Causal logic learning unit 303

Fig. 8

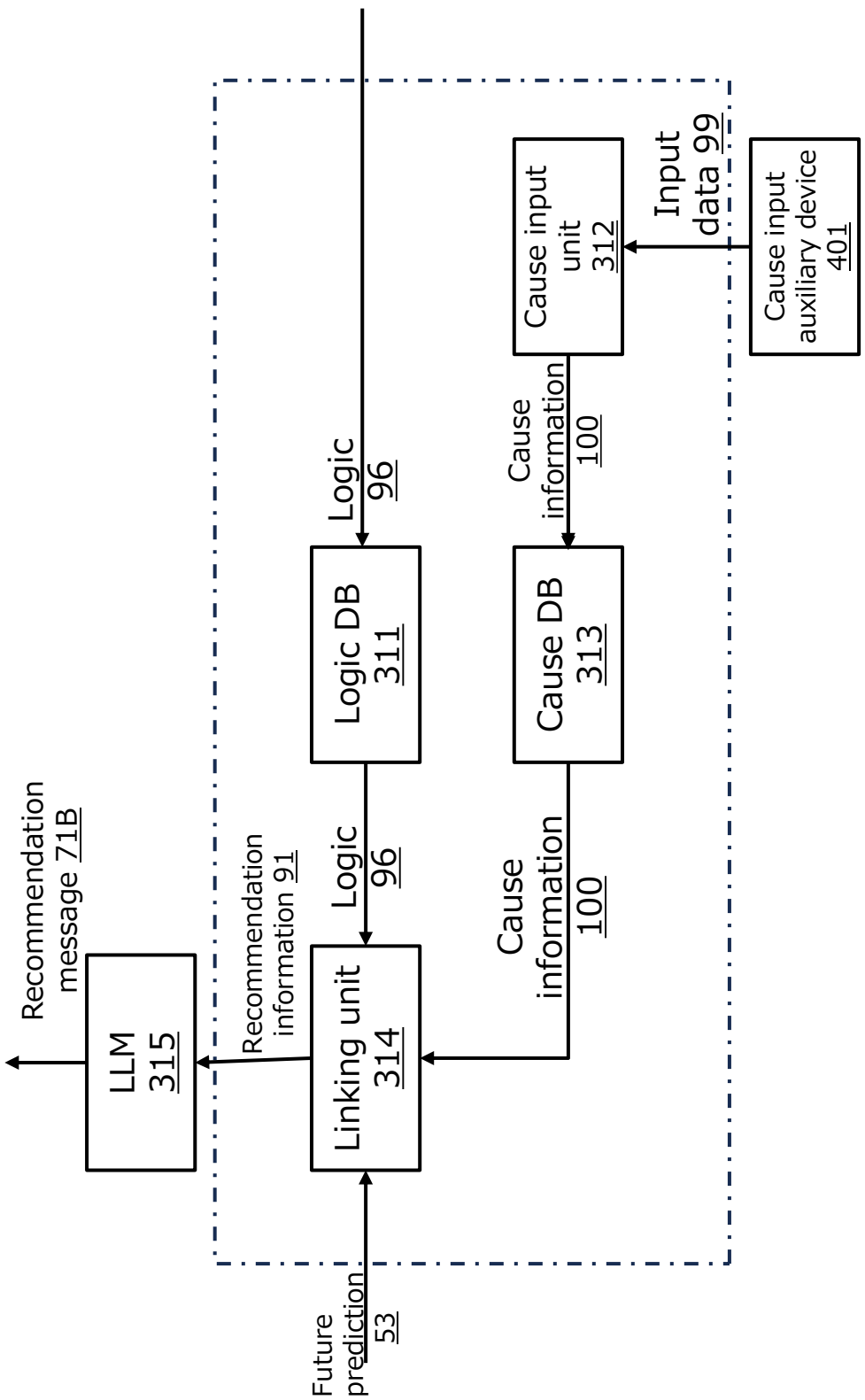
Future prediction 53
Logic 96
Logic DB 311
Logic 96
Linking unit 314
Recommendation information 91
LLM 315
Recommendation message 71B
Cause information 100
Cause DB 313
Cause information 100
Cause input unit 312
Input data 99
Cause input auxiliary device 401