XYZ Axis
2nd Bond to Next 1st
(Z @ Reset)

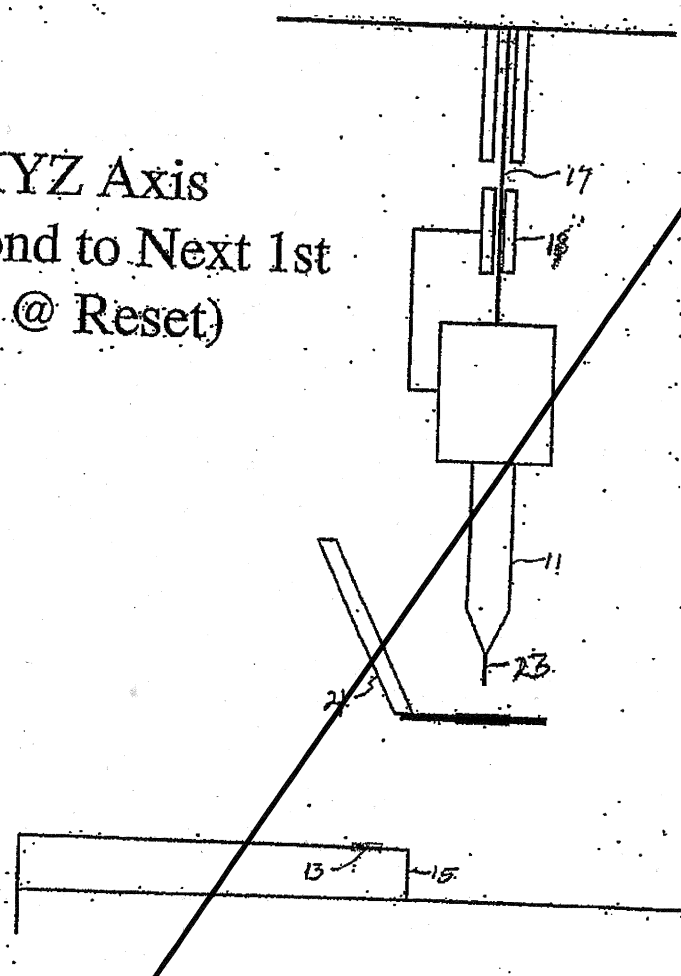

Fig. 1A

XYZ Axis
2nd Bond to Next 1st
(ball formation)

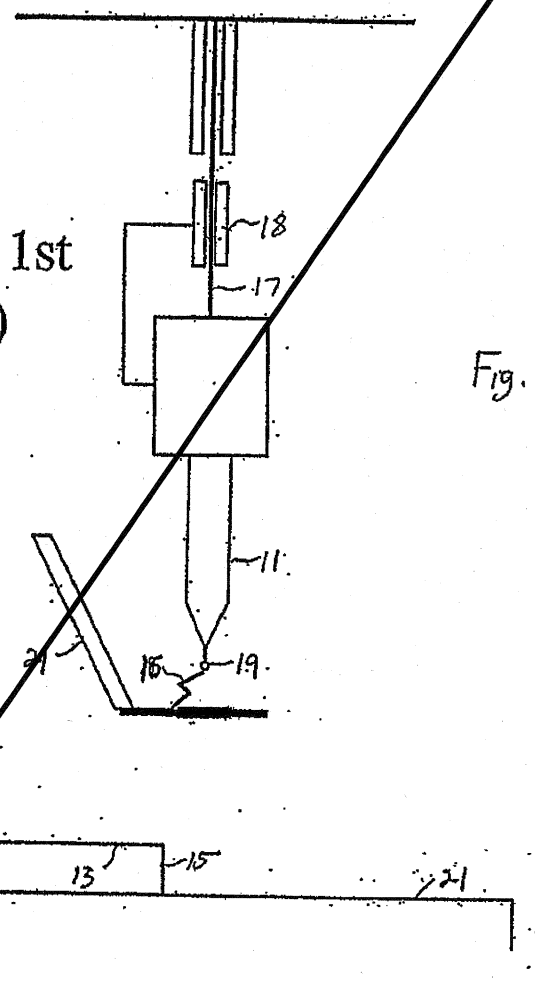

Fig. 1B

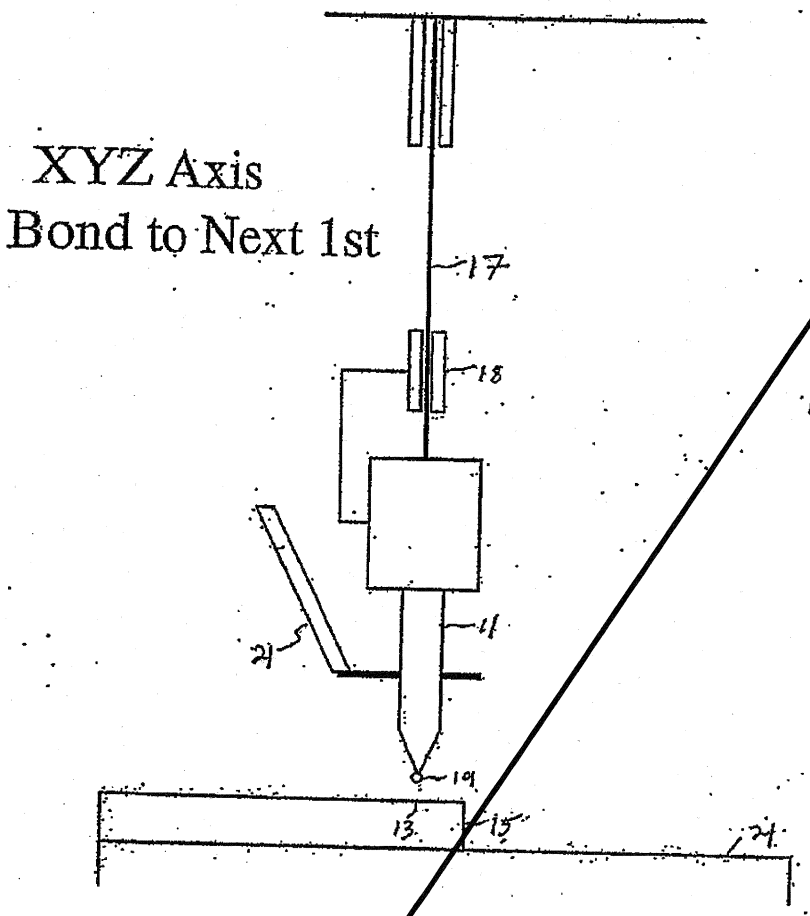

Fig. 1C

1st Bond
- Z Axis Force
- USG Power
- USG Time

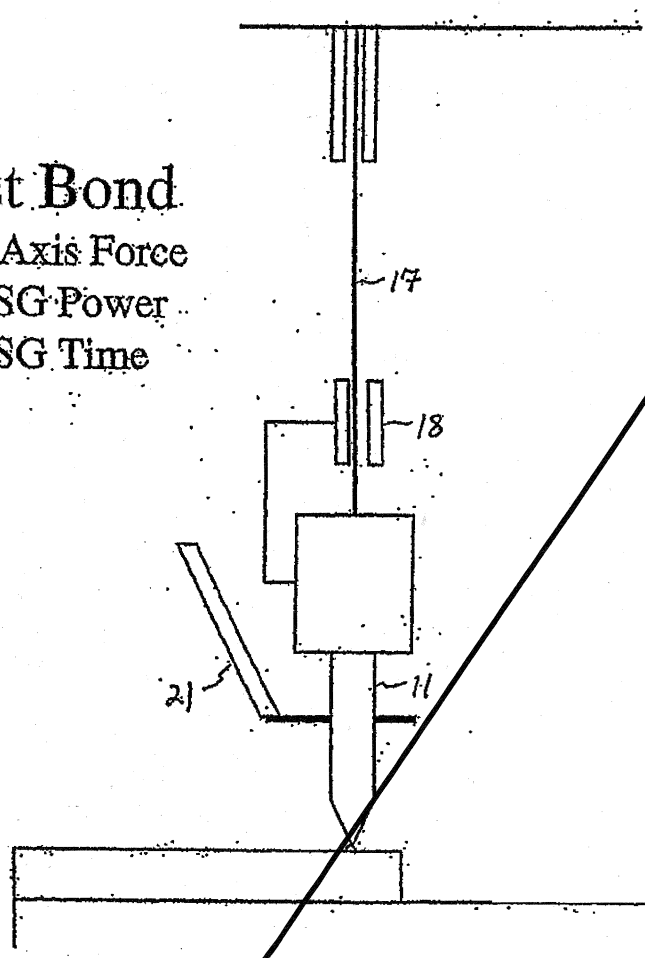

Fig. 1D

Z Axis
Rise to Kink
Motion

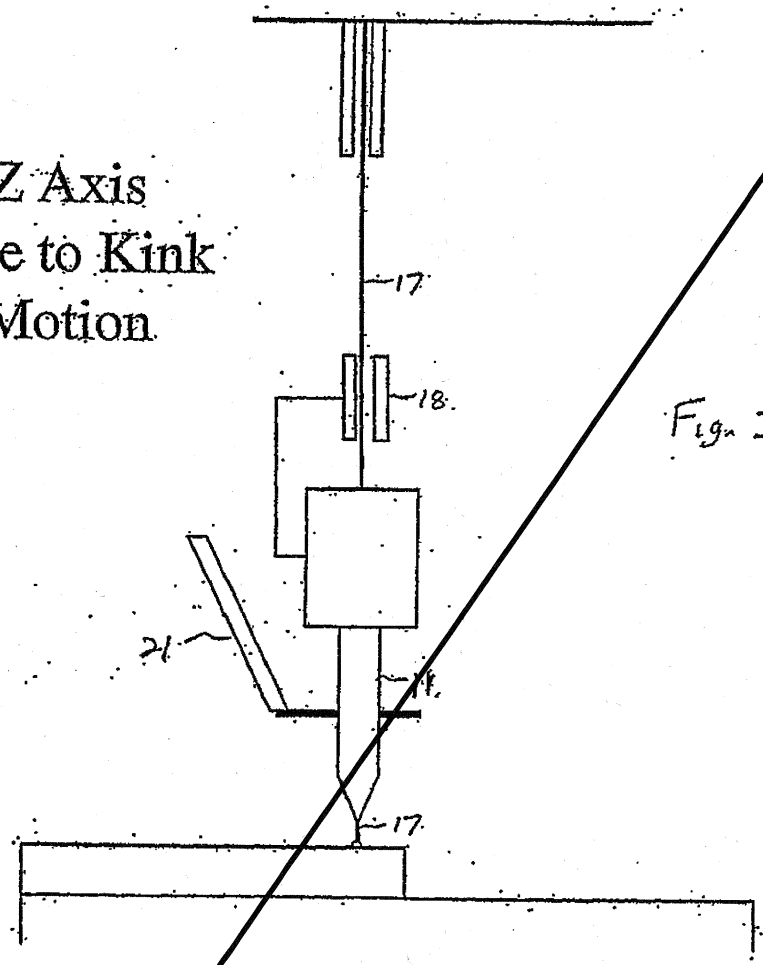

Fig. 1E

XYZ Axis
Looping Trajectory
to Second Bond

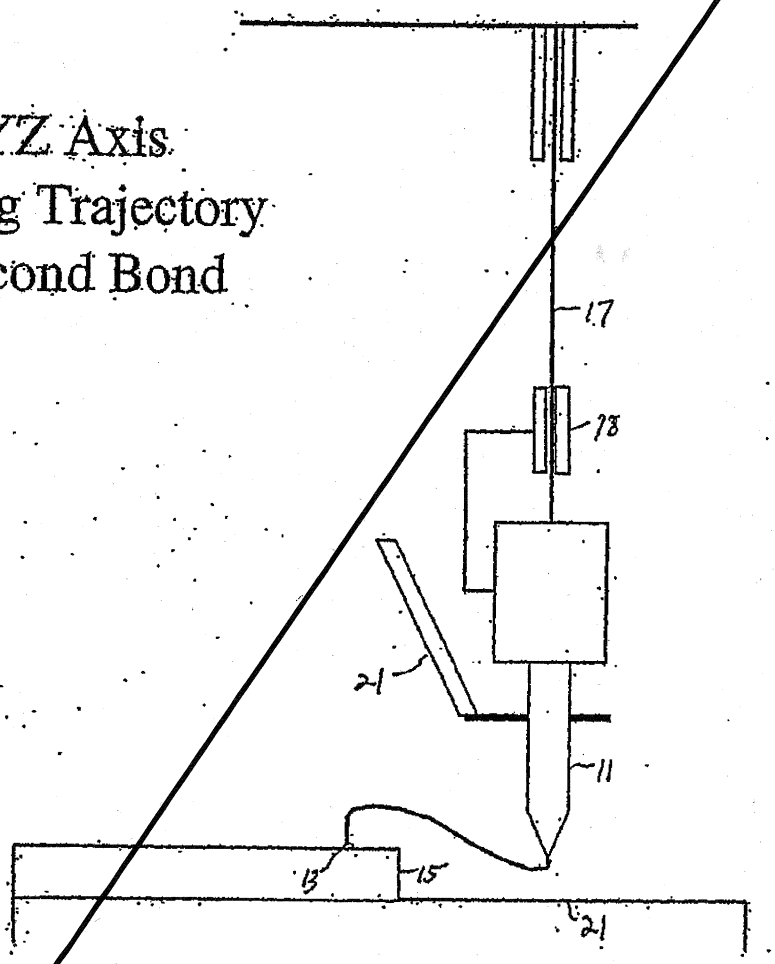

Fig. 1F

Z Axis
Seek(tip)
(clamp open)

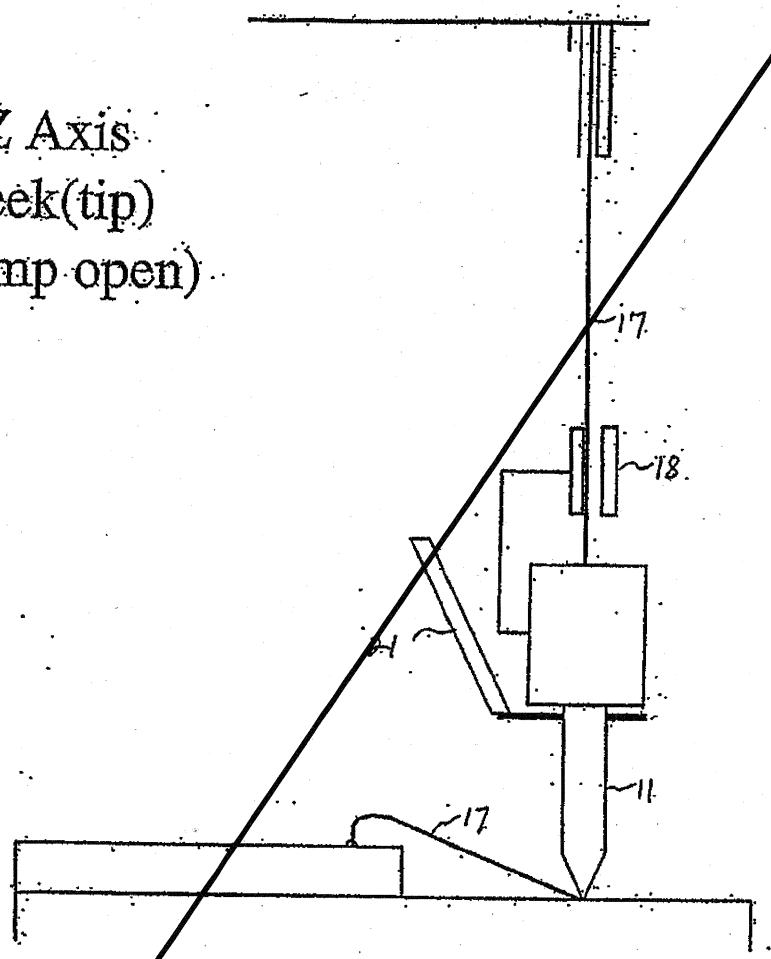

Fig. 1G

Z Axis
Rise to Clamp

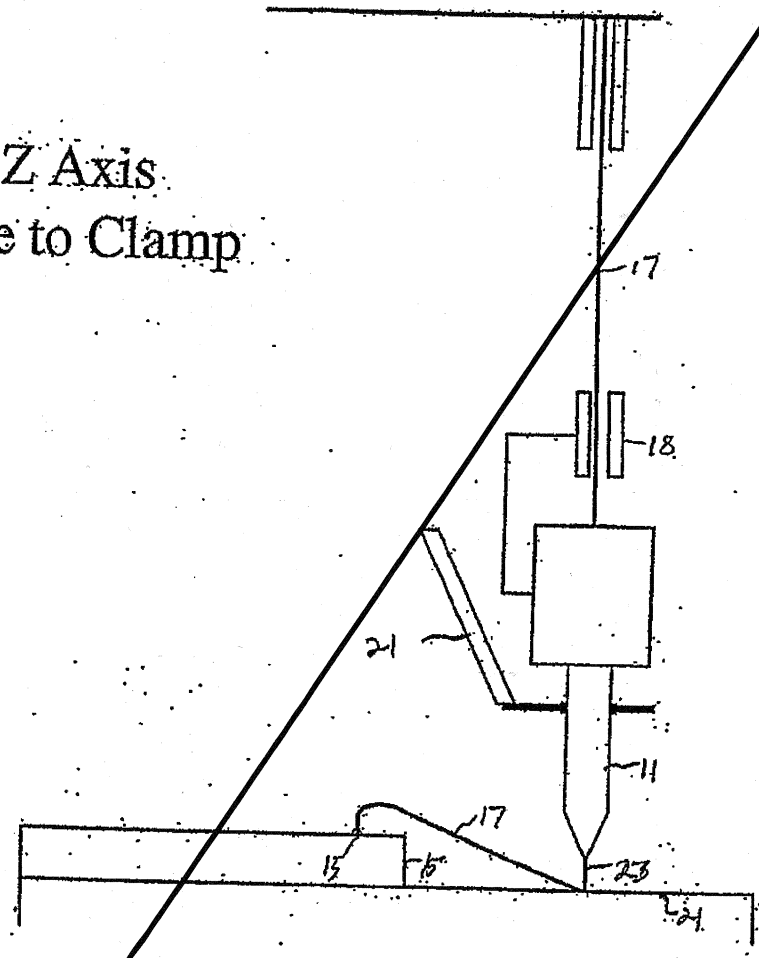

Fig. 1H

XYZ Axis
Bond to Next 1st
Z rise to reset)

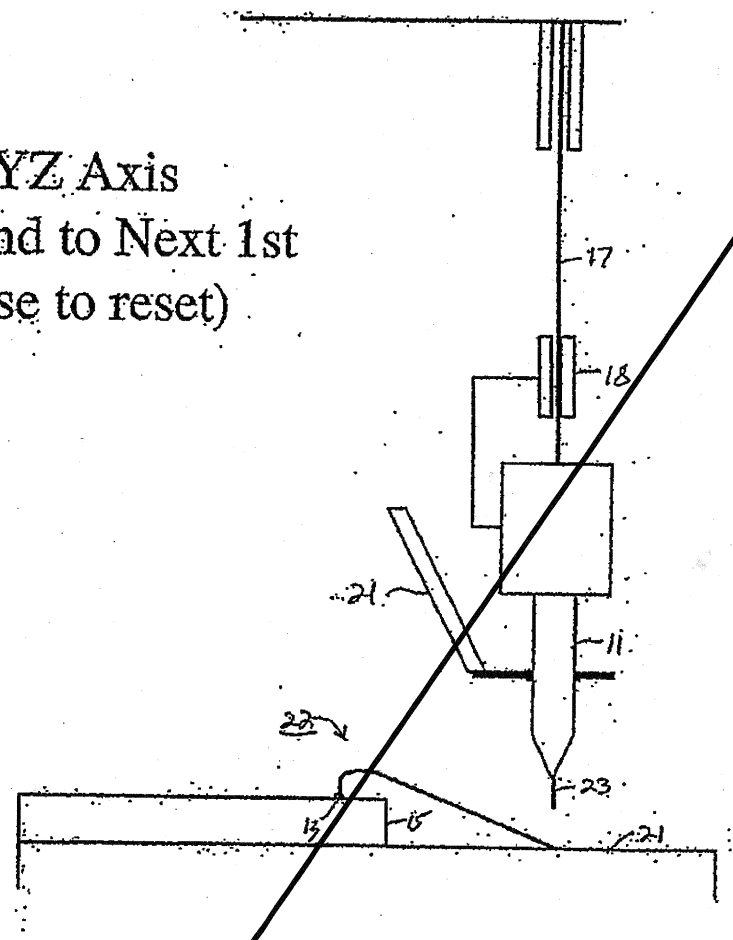

Fig. II

Fig. 2A

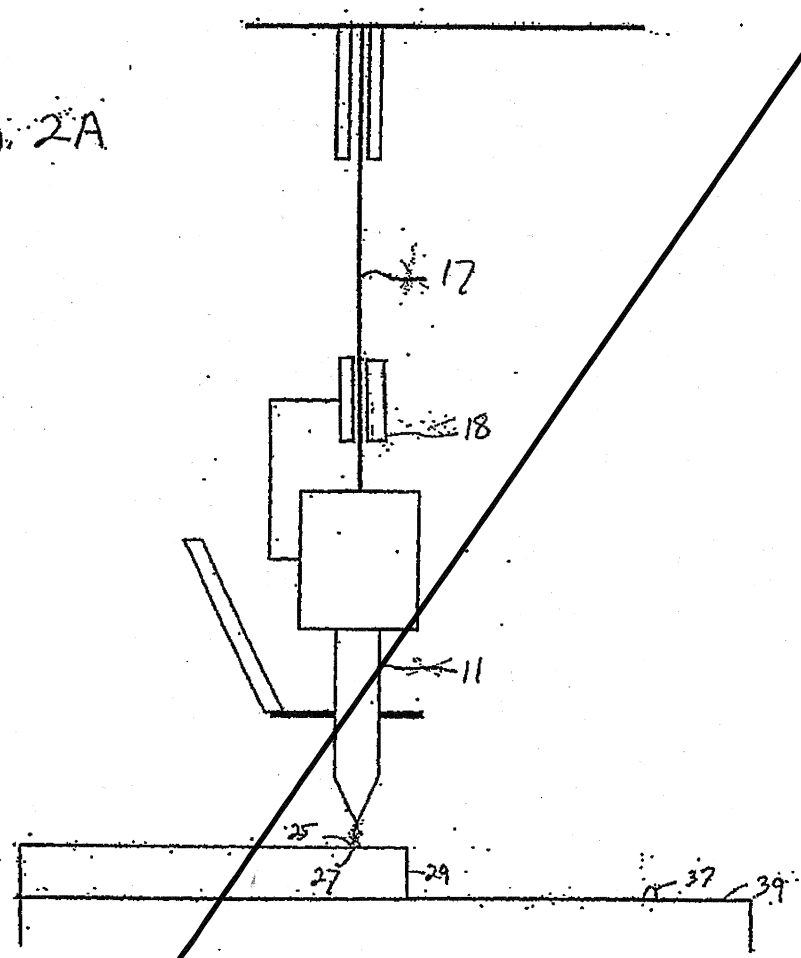

Figure 2B

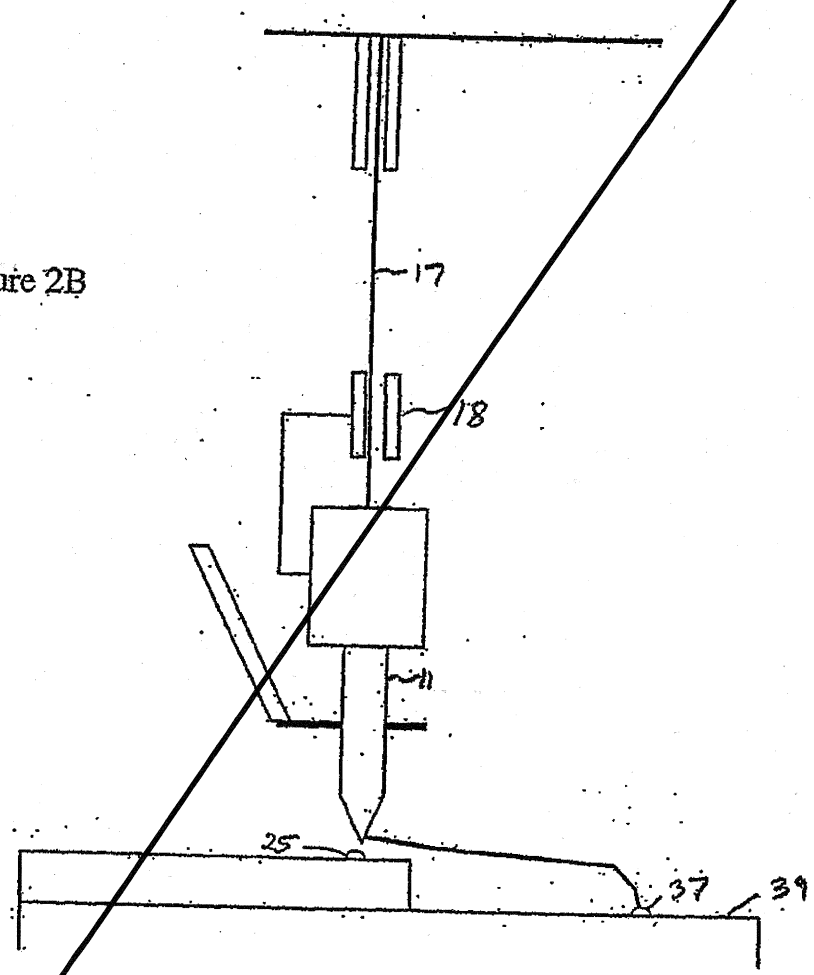

Figure 2C

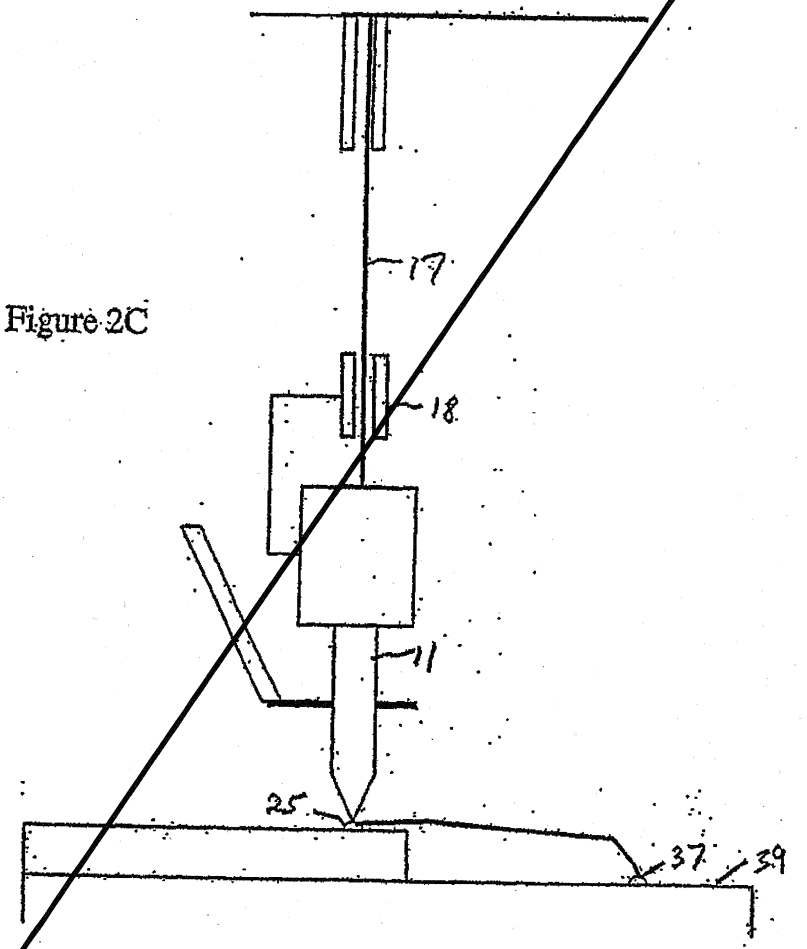

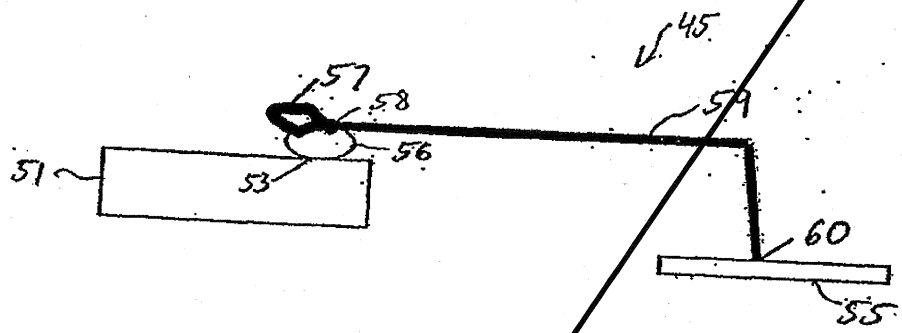

Fig. 3

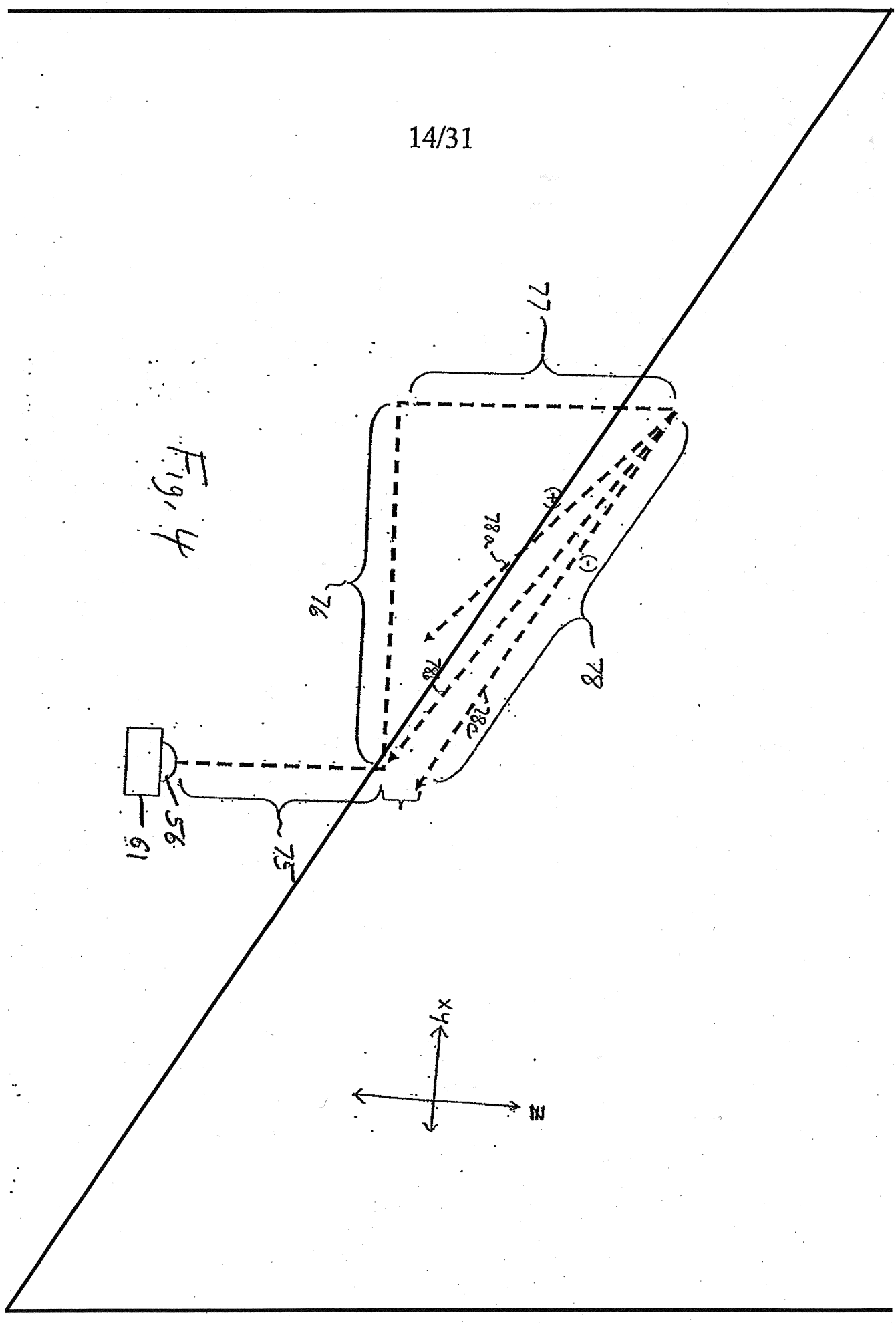

Fig. 4

XYZ Axis
2nd Bond to Next 1st
(Z @ Reset)

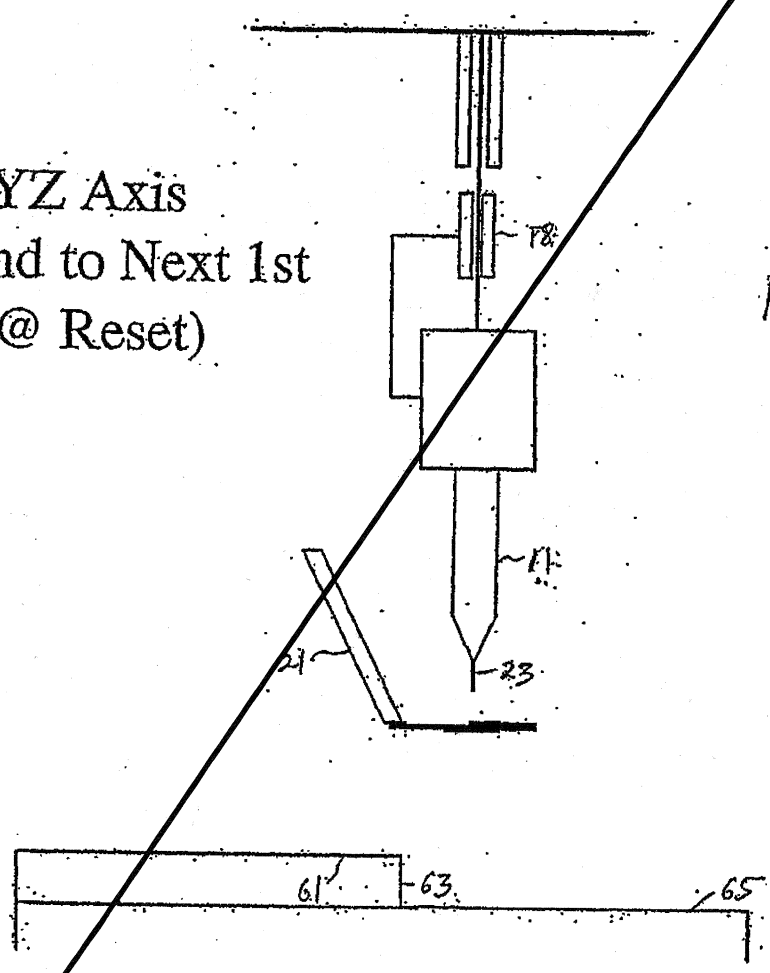

Fig. 5A

XYZ Axis
2nd Bond to Next 1st
(ball formation)

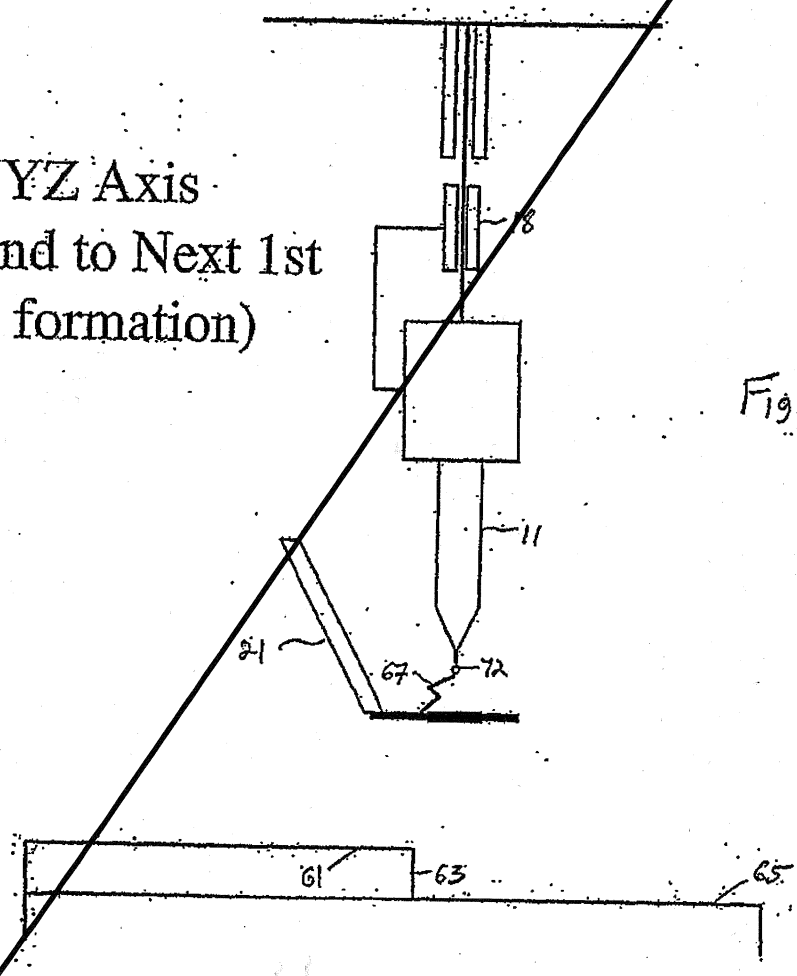

Fig. 5B

XYZ Axis
2nd Bond to Next 1st

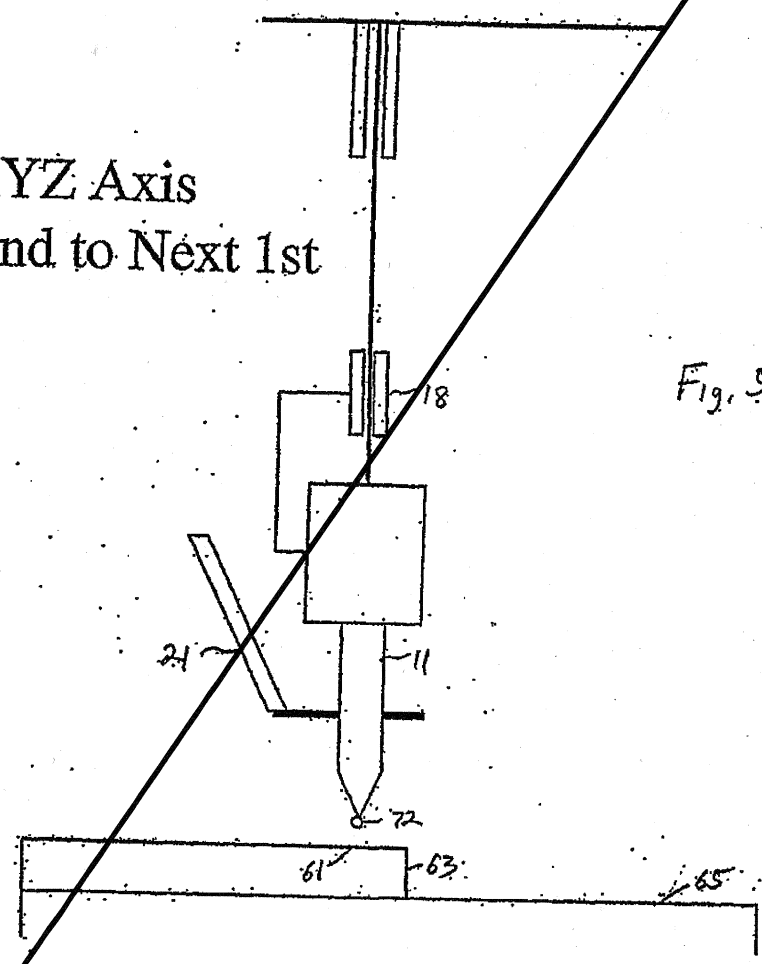

Fig. 5C

1st Bond
- Z Axis Force
- USG Power
- USG Time

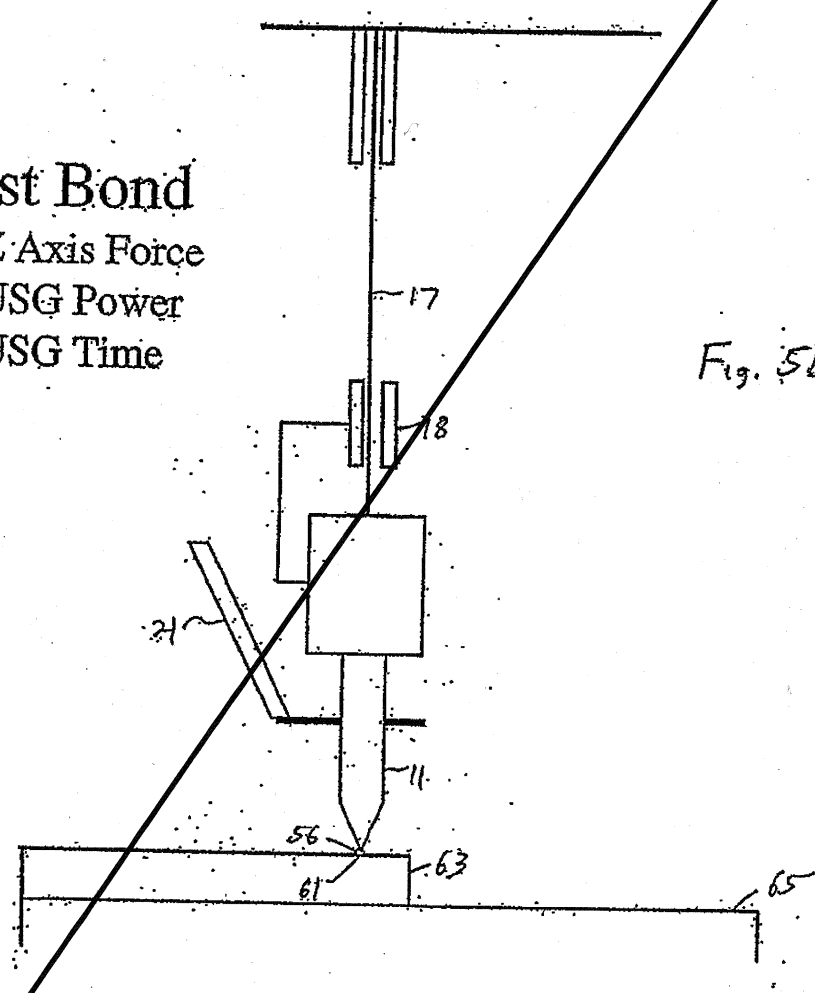

Fig. 5D

Z Axis
Rise to Kink
Motion

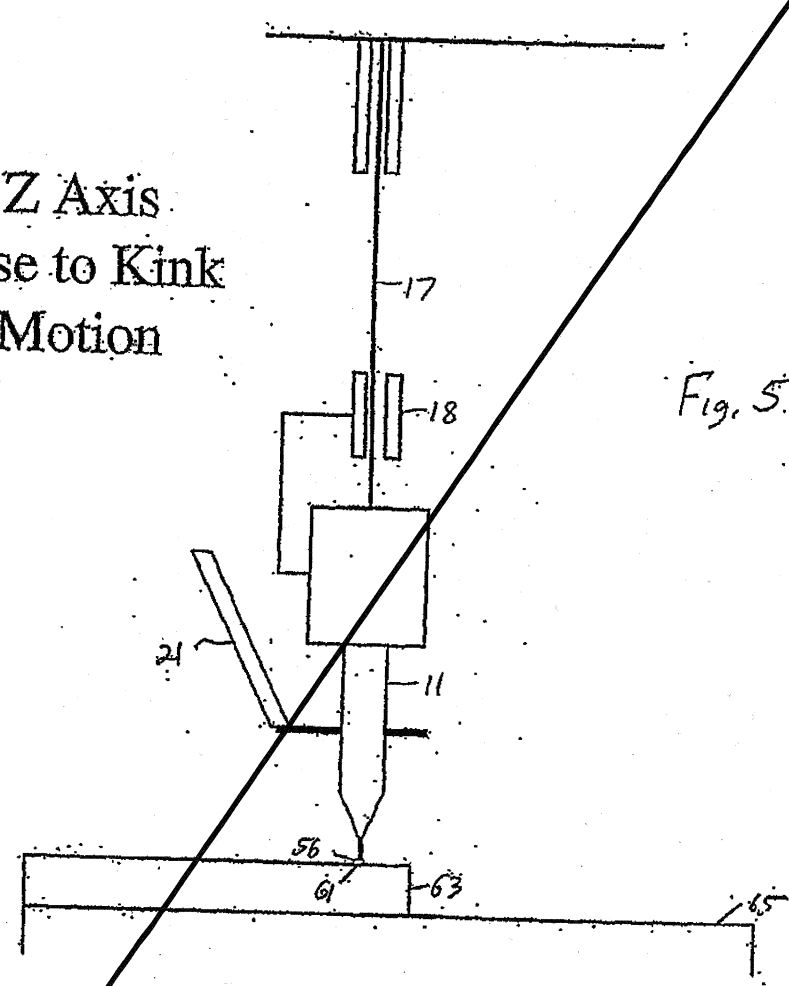

Fig. 5E

XY Axis
Reverse Motion

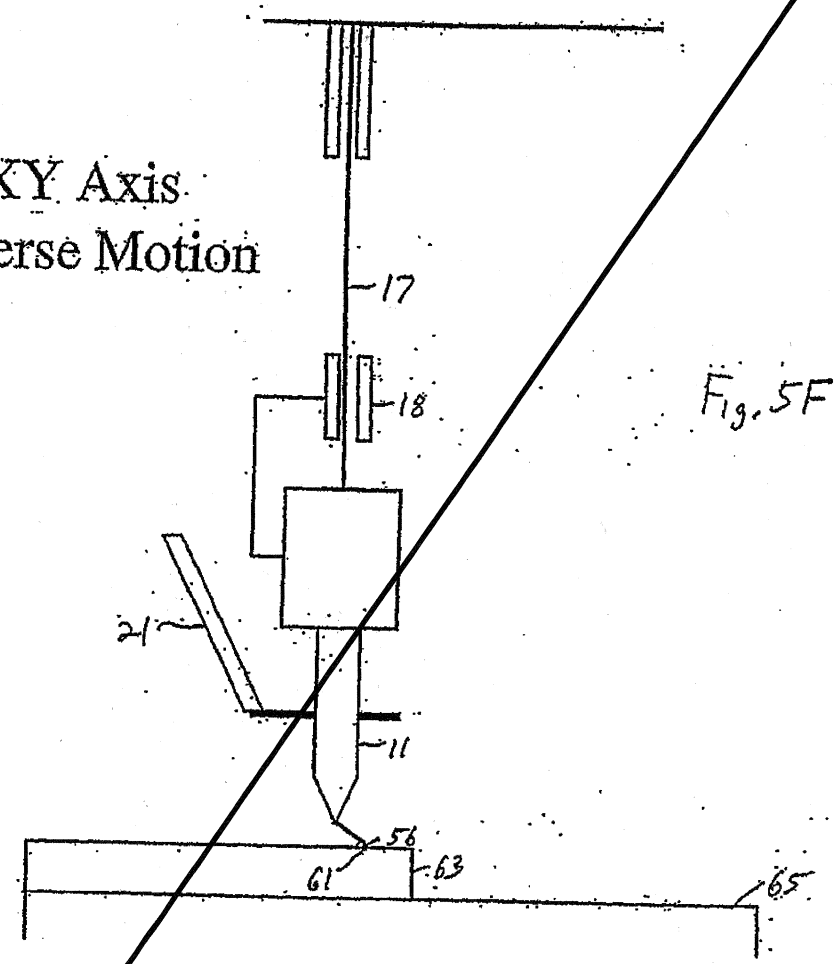

Fig. 5F

Z Axis
Fold Loop Factor

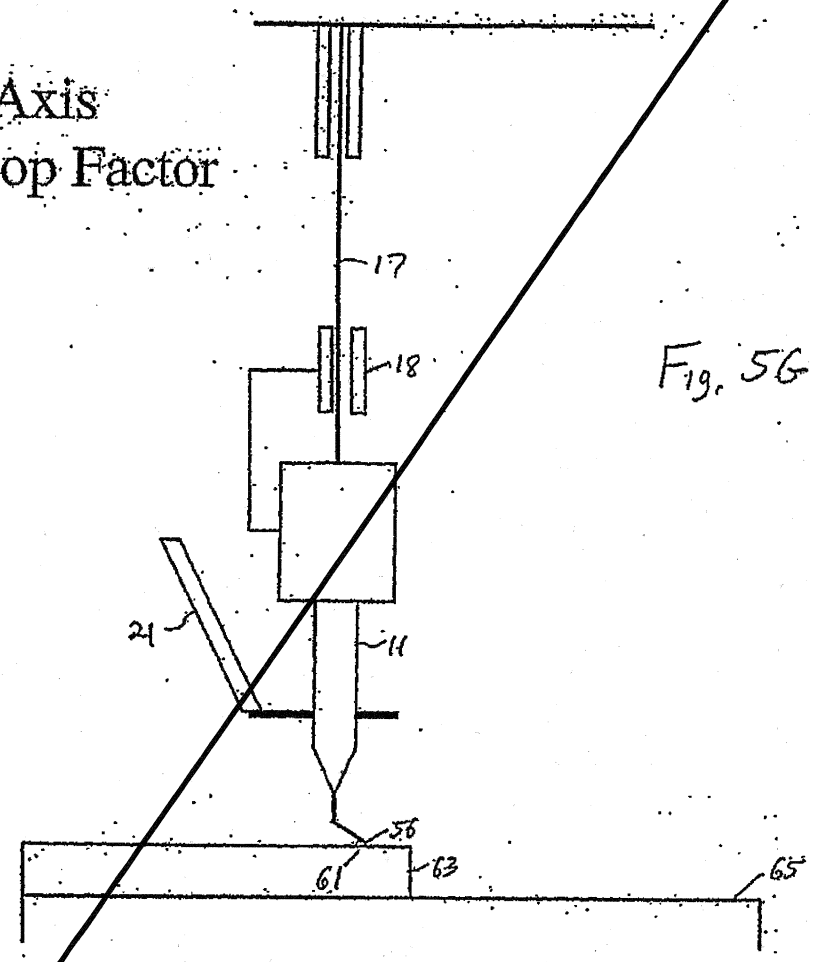

Fig. 5G

Z Axis
Fold Return motion
(Fold distance and
height controls the final location)

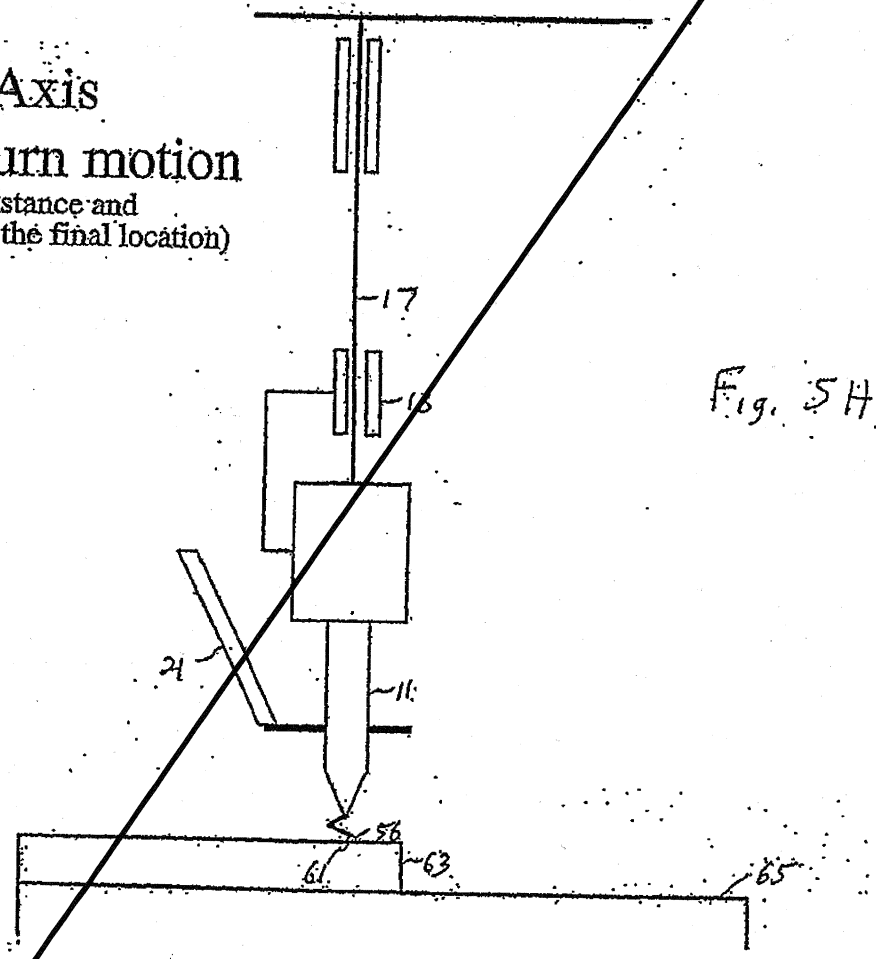

Fig. 5H

Z Axis

Fold Return motion

(Fold distance and height controls the final location)

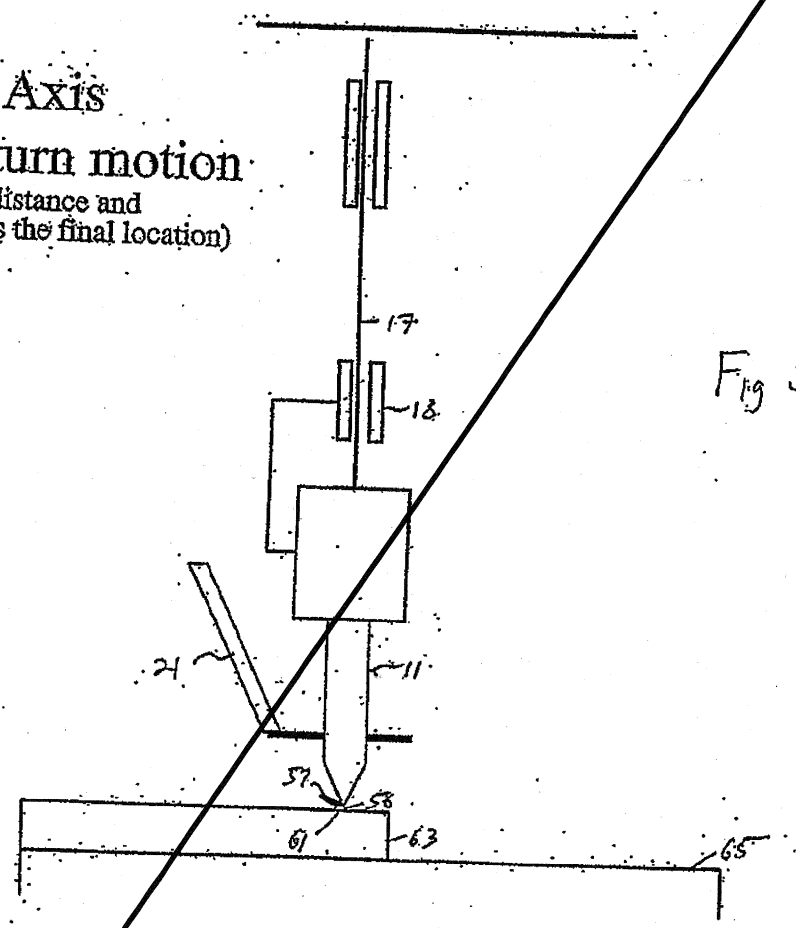

Fig 5I

Z Axis
Rise to top motion

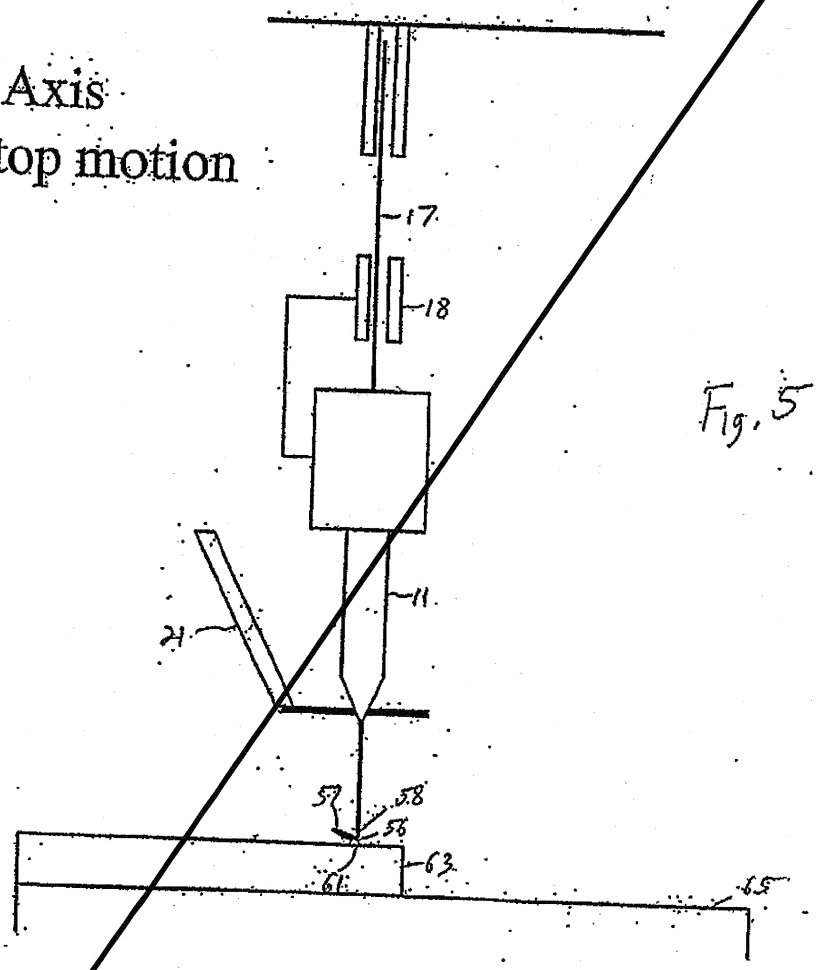

Fig. 5J

XYZ Axis
Looping Trajectory
to Second Bond

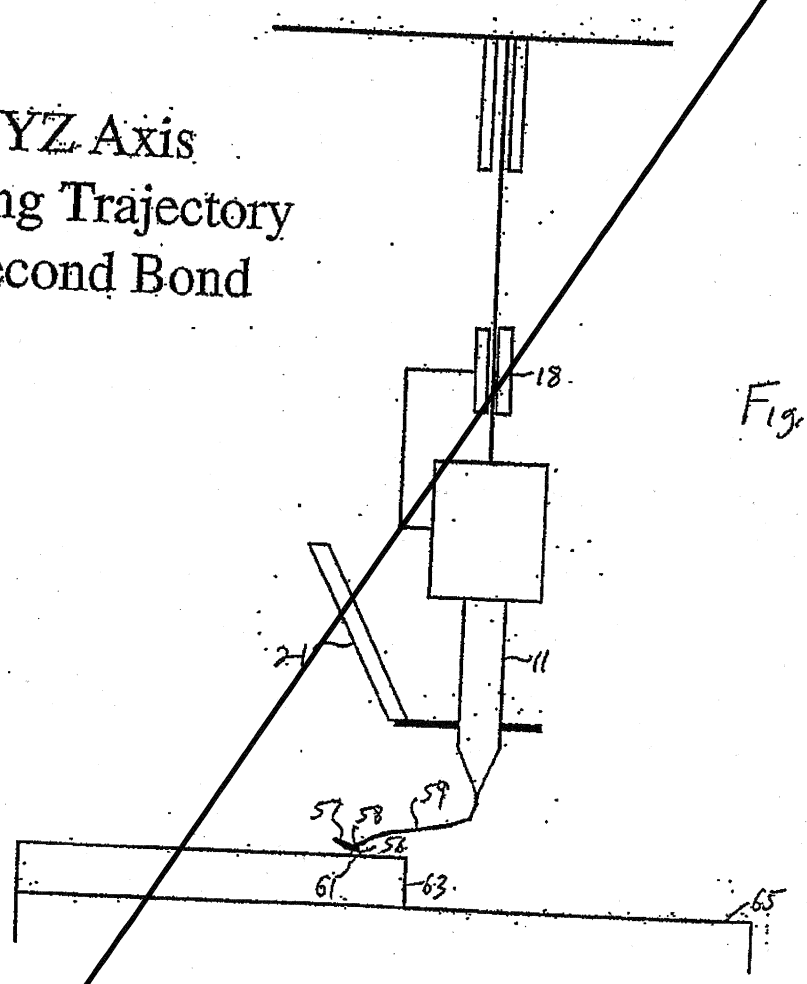

Fig. 5K

XYZ Axis
Looping Trajectory
to Second Bond

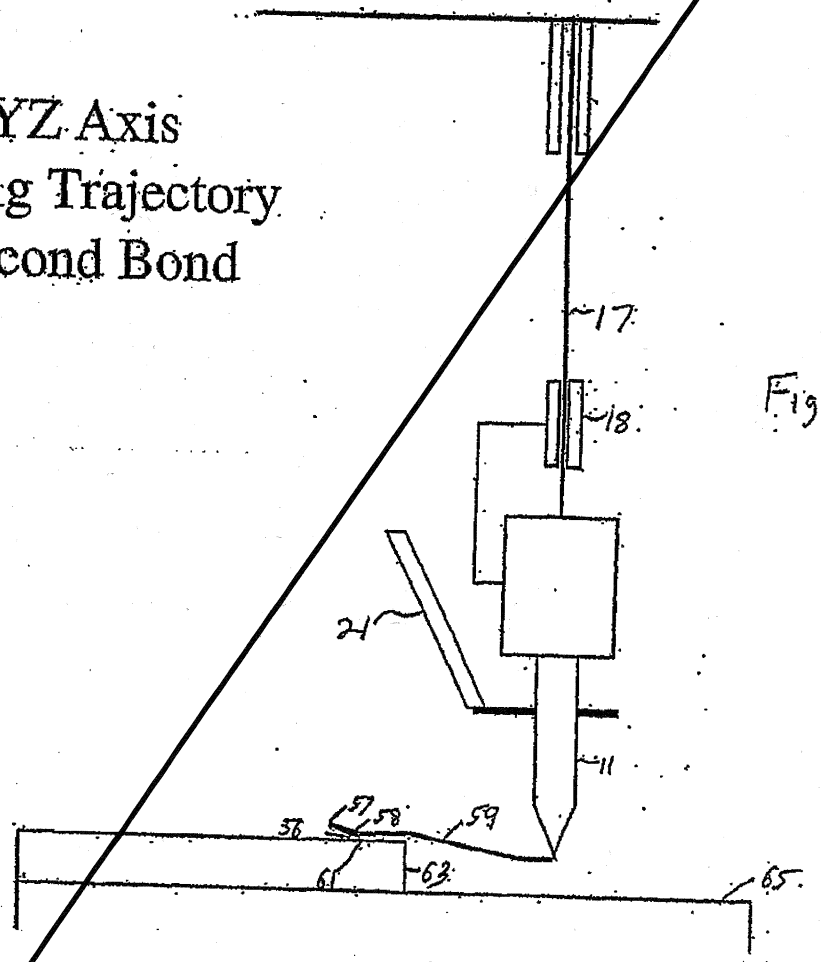

Fig. 5L

2nd Bond

- Z Axis Force
- USG Power
- USG Time

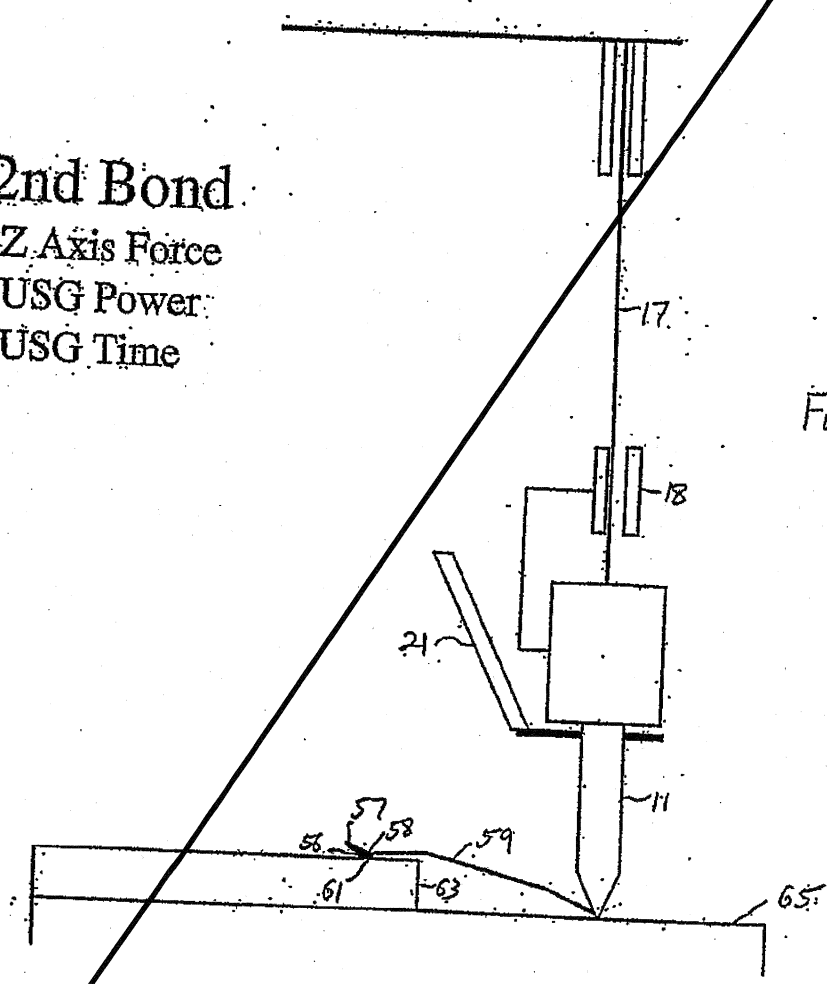

Fig. 5M

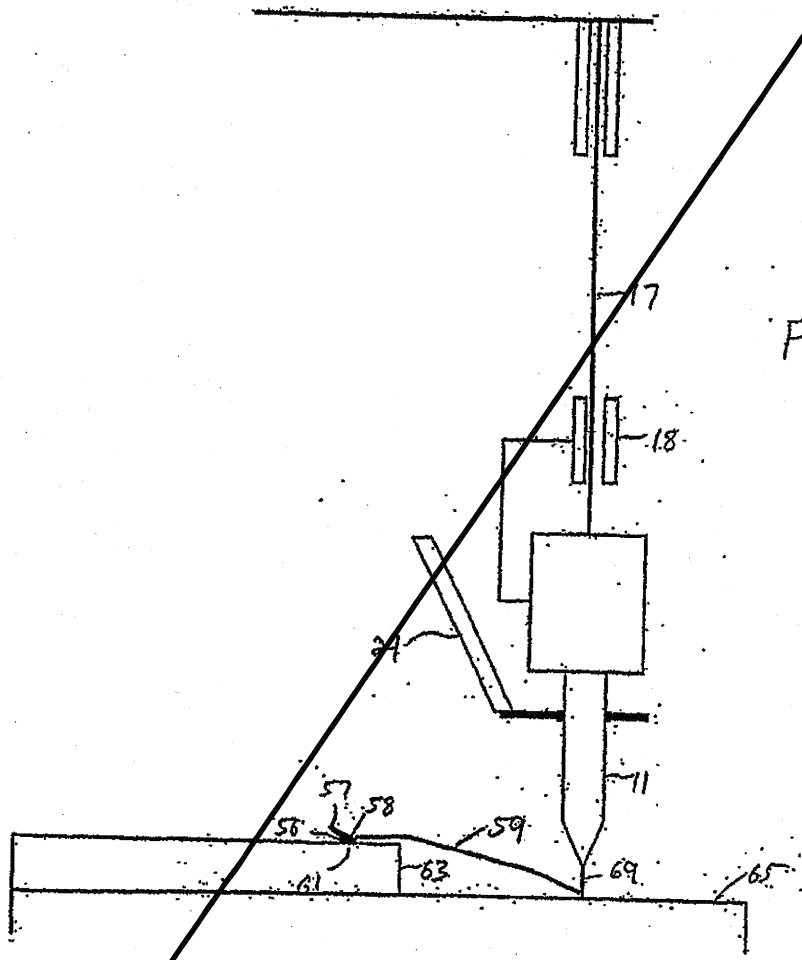

Fig. 5N

XYZ Axis
2nd Bond to Next 1st
(Z rise to reset)

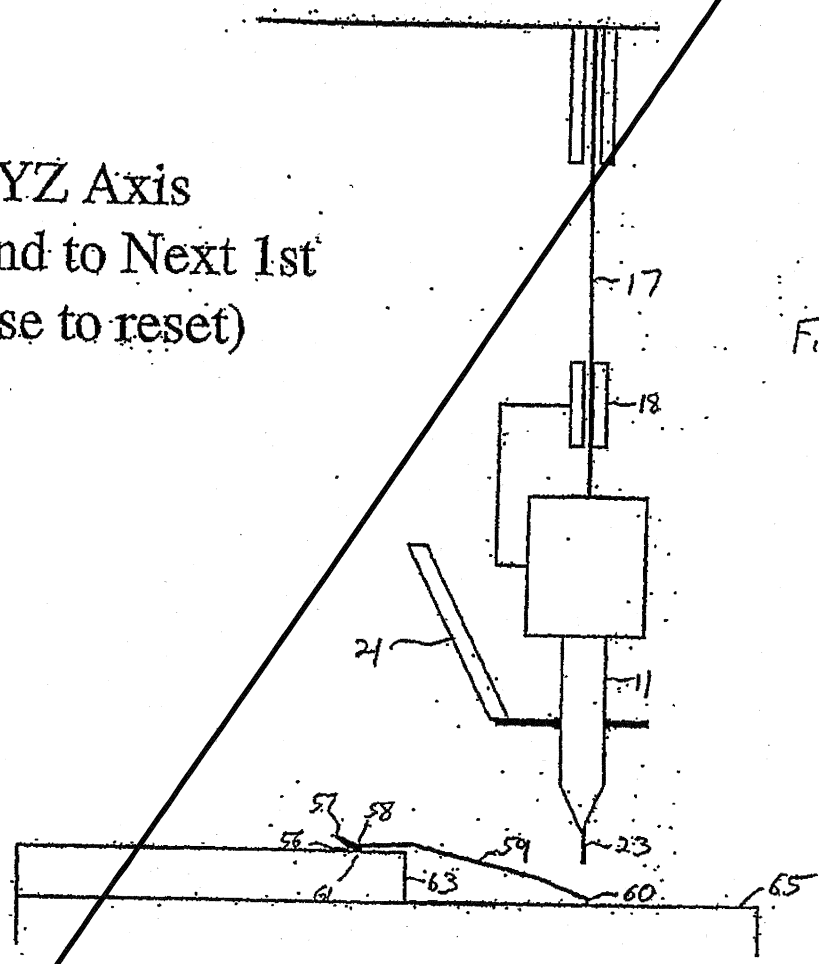

Fig. 50

Figure 6

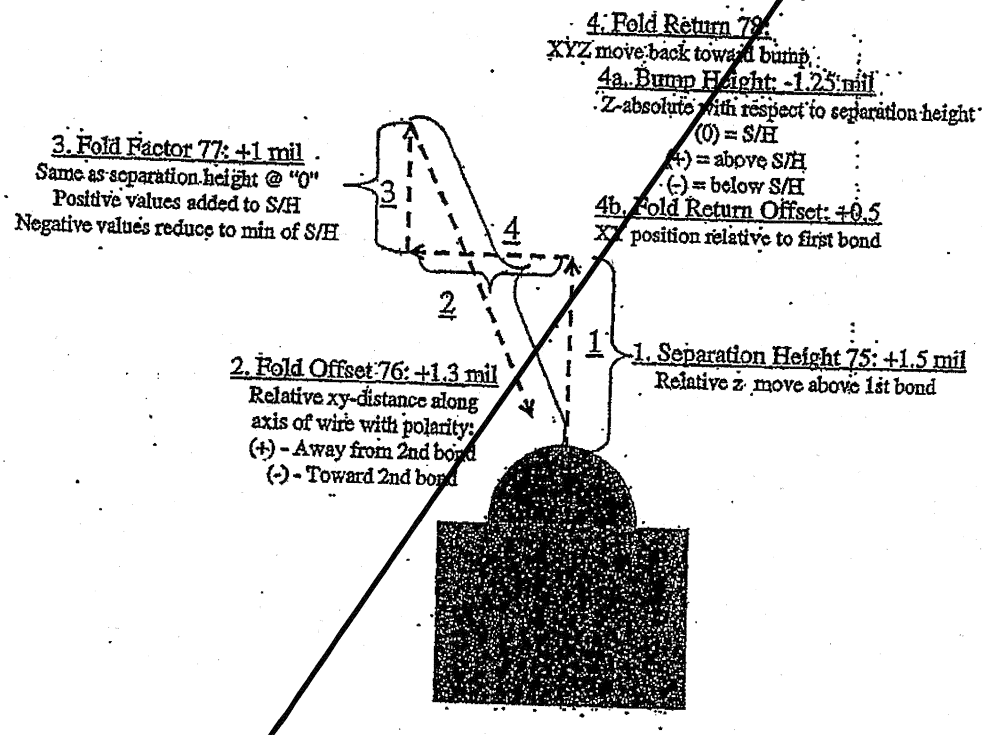
4. Fold Return 78:
XYZ move back toward bump
4a. Bump Height: -1.25 mil
Z-absolute with respect to separation height
(0) = S/H
(+) = above S/H
(-) = below S/H
4b. Fold Return Offset: +0.5
XY position relative to first bond
3. Fold Factor 77: +1 mil
Same as separation height @ "0"
Positive values added to S/H
Negative values reduce to min of S/H
3
4
2
1
1. Separation Height 75: +1.5 mil
Relative z- move above 1st bond
2. Fold Offset 76: +1.3 mil
Relative xy-distance along
axis of wire with polarity:
(+) - Away from 2nd bond
(-) - Toward 2nd bond

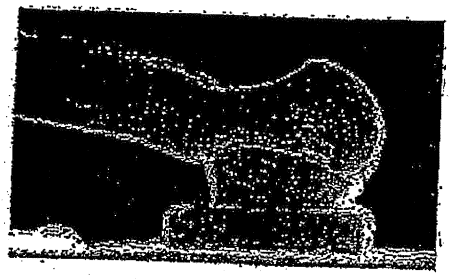

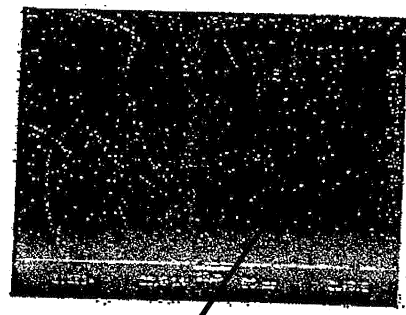

7A

7B

Figure 8A

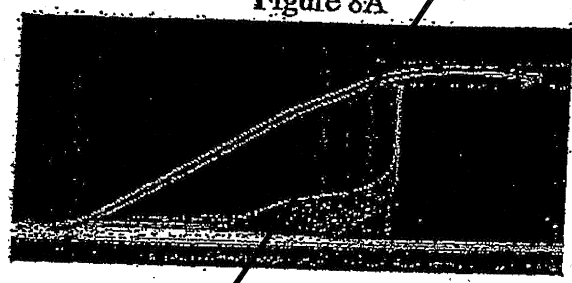

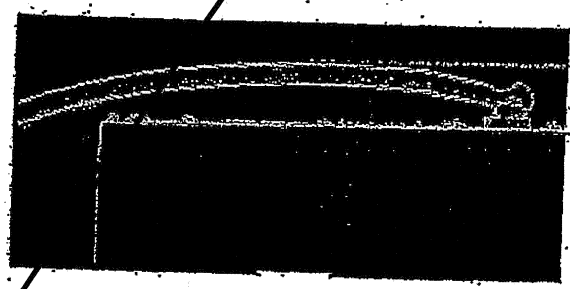

Figure 8B

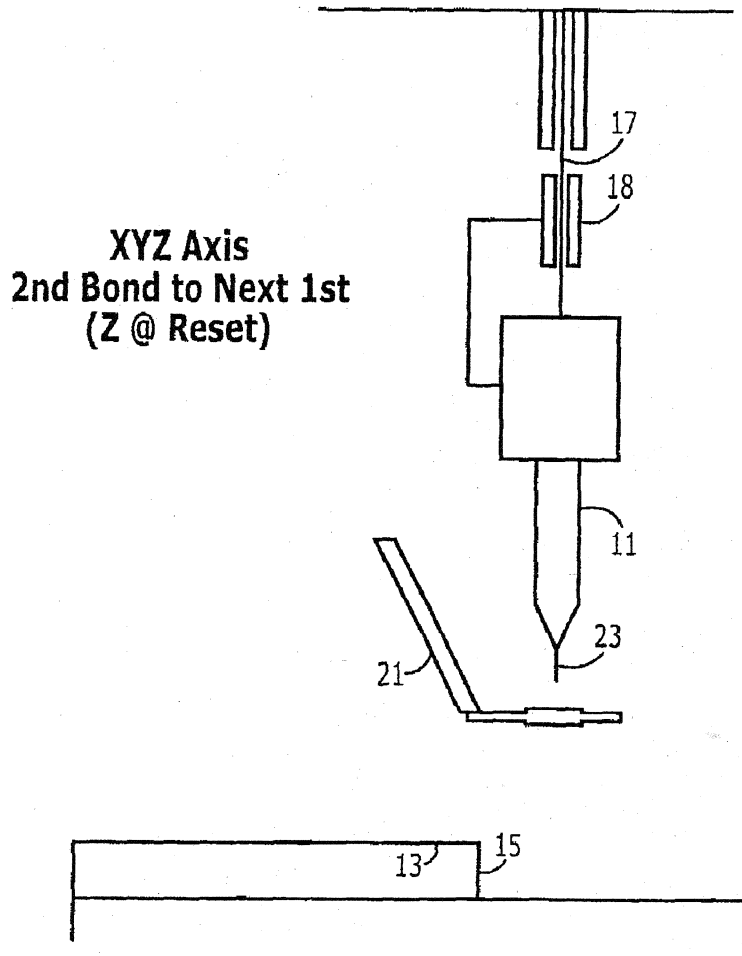

FIG. 1A

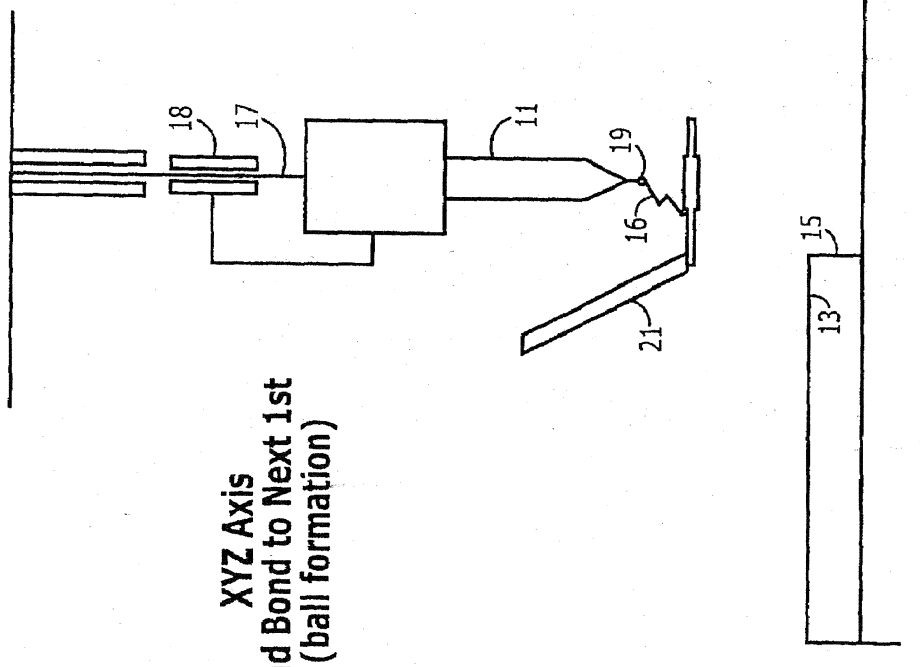
18
17
11
19
16
21
XYZ Axis
2nd Bond to Next 1st
(ball formation)
21
15
13

FIG. 1B

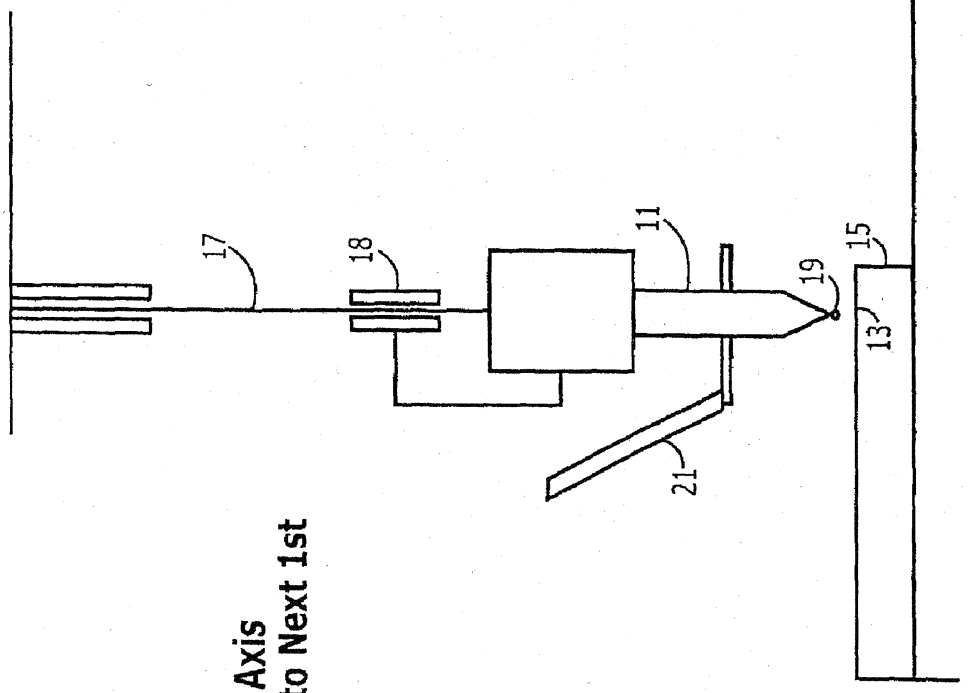

FIG. 1C

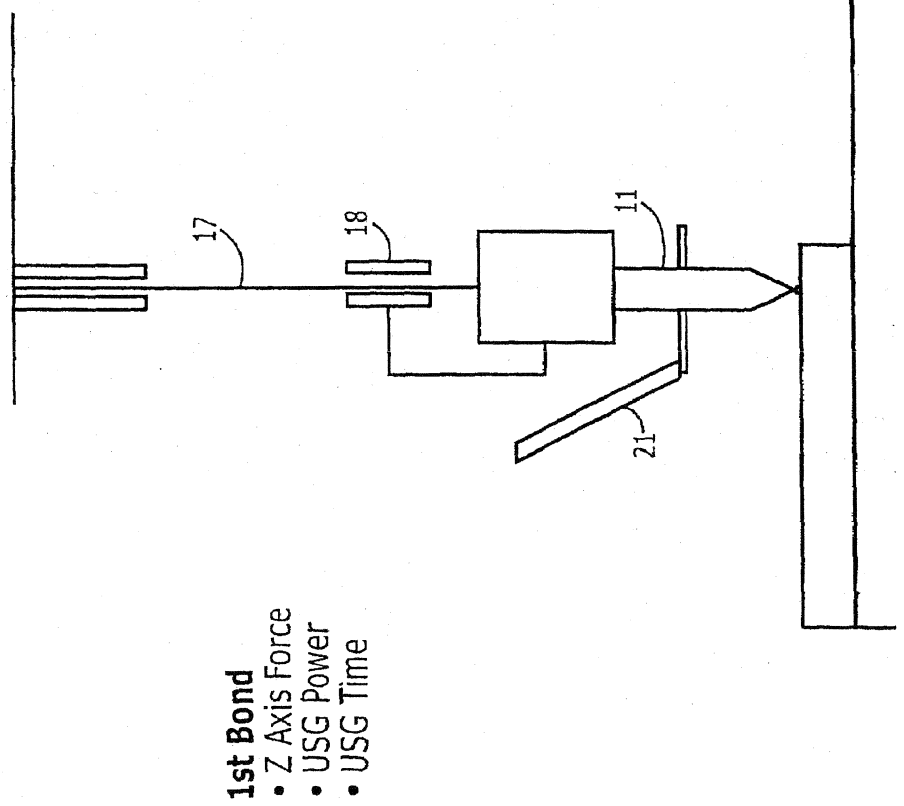

FIG. 1D

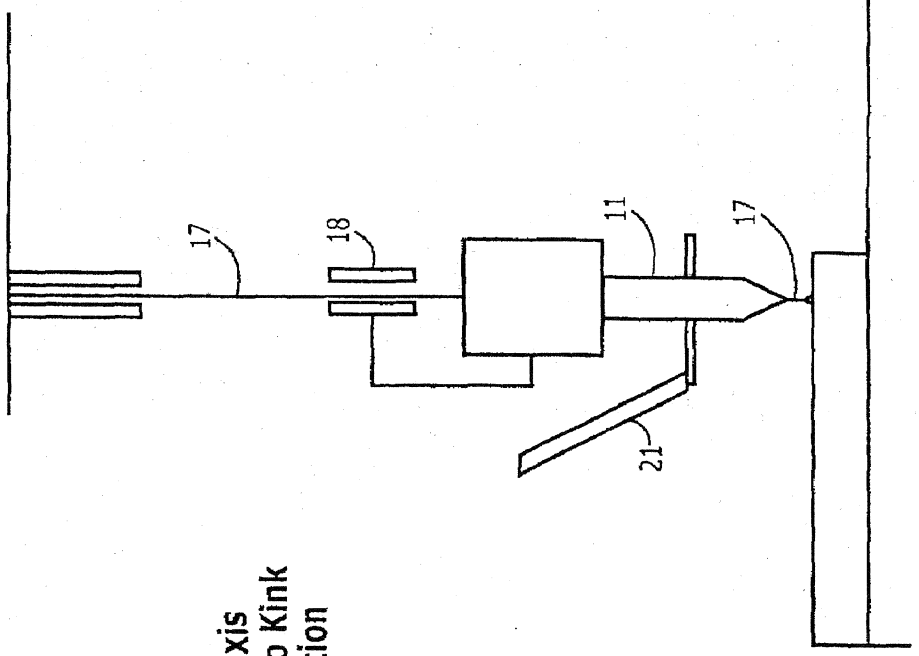

FIG. 1E

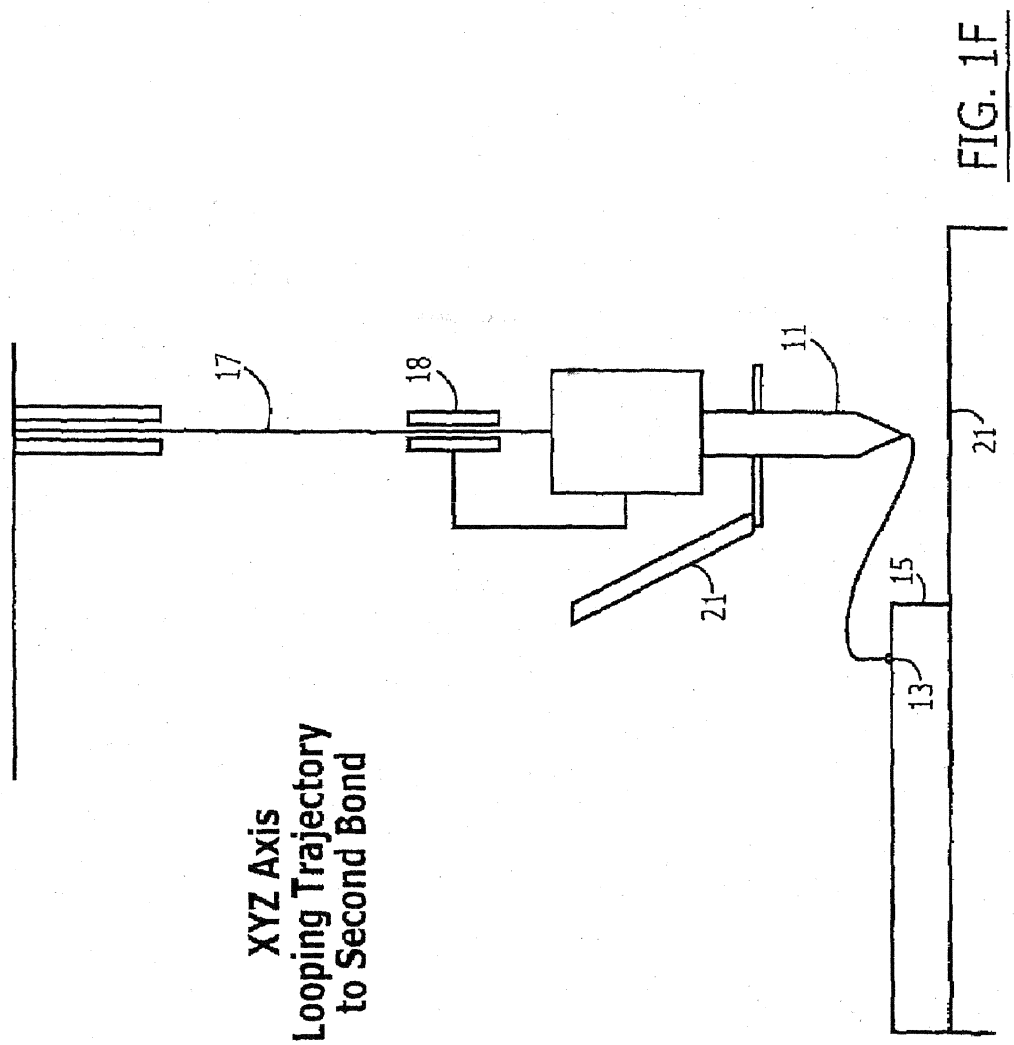
XYZ Axis
Looping Trajectory
to Second Bond
17
18
11
21
15
13
21

FIG. 1F

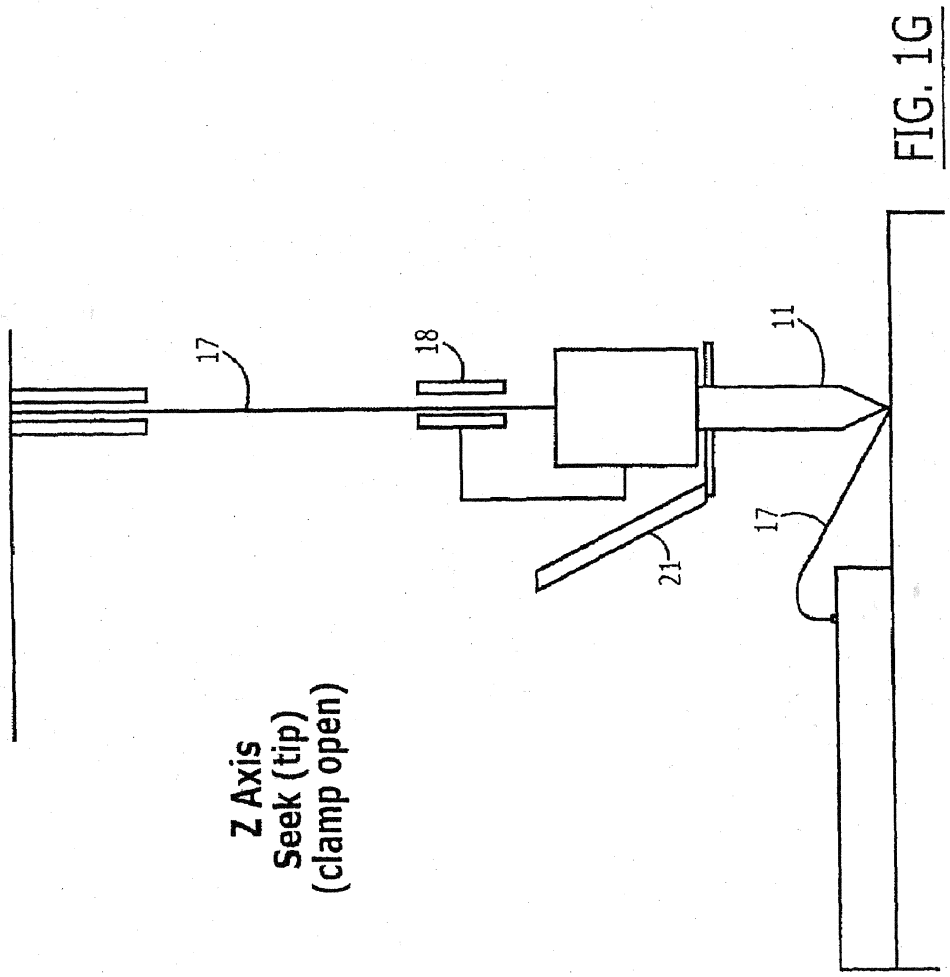

FIG. 1G

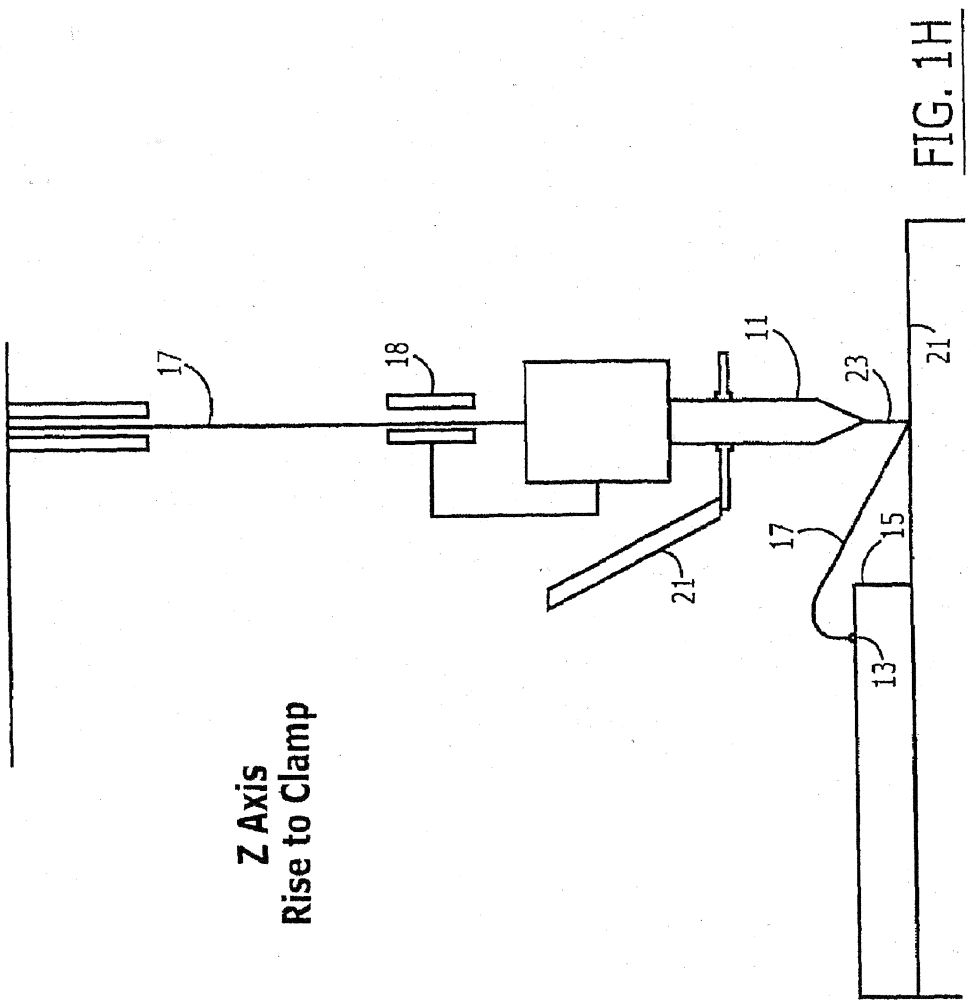

FIG. 1H

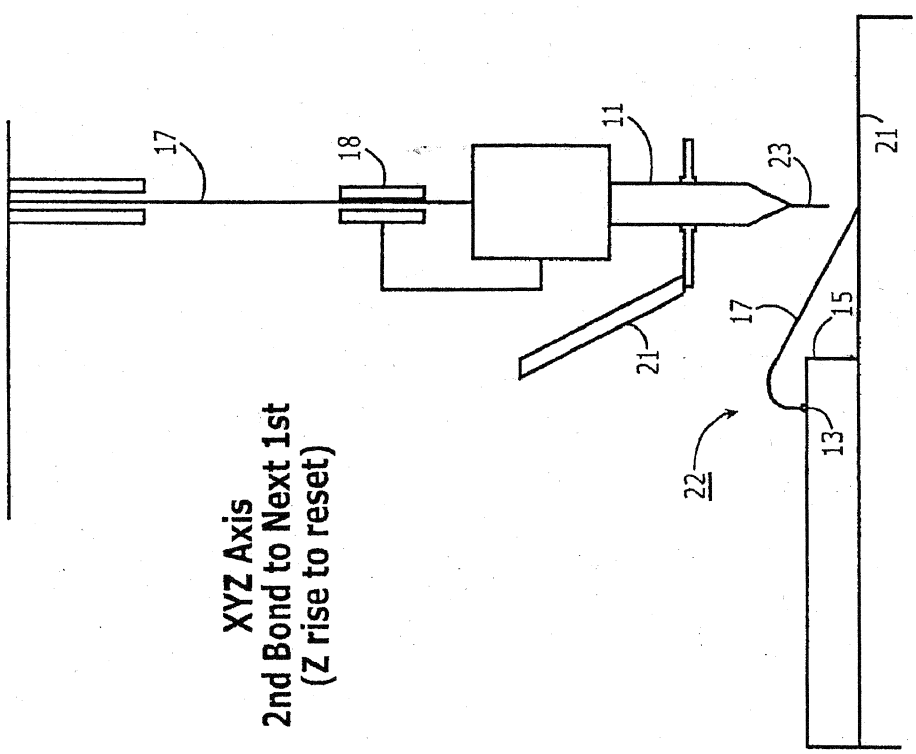
17
18
11
23
21
21
17
15
13
22
XYZ Axis
2nd Bond to Next 1st
(Z rise to reset)

FIG. 1I

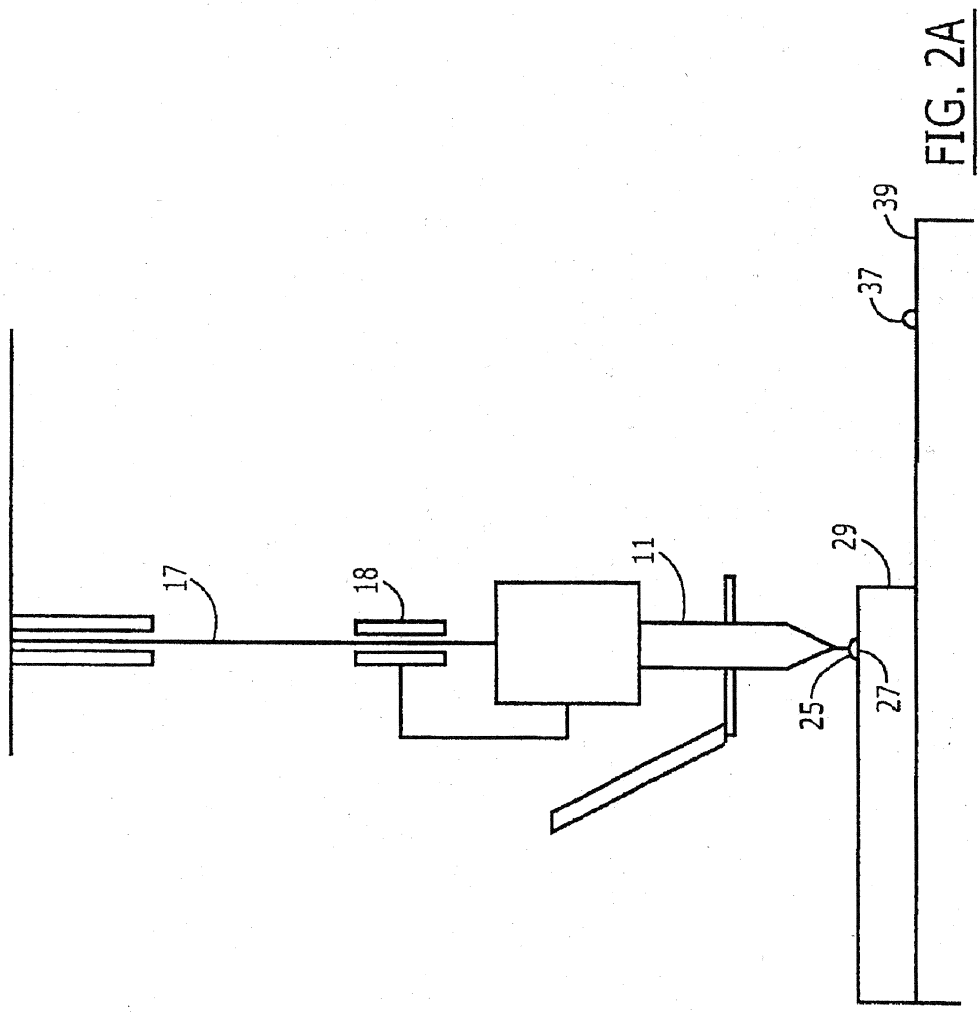

FIG. 2A

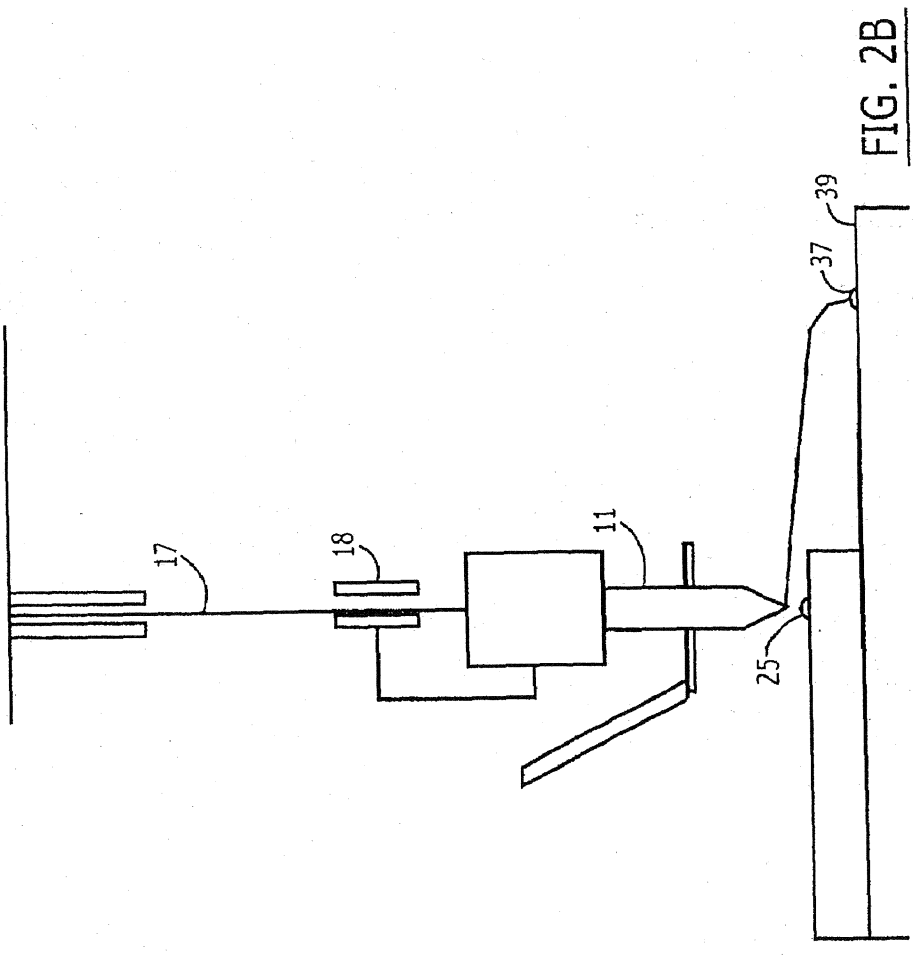

FIG. 2B

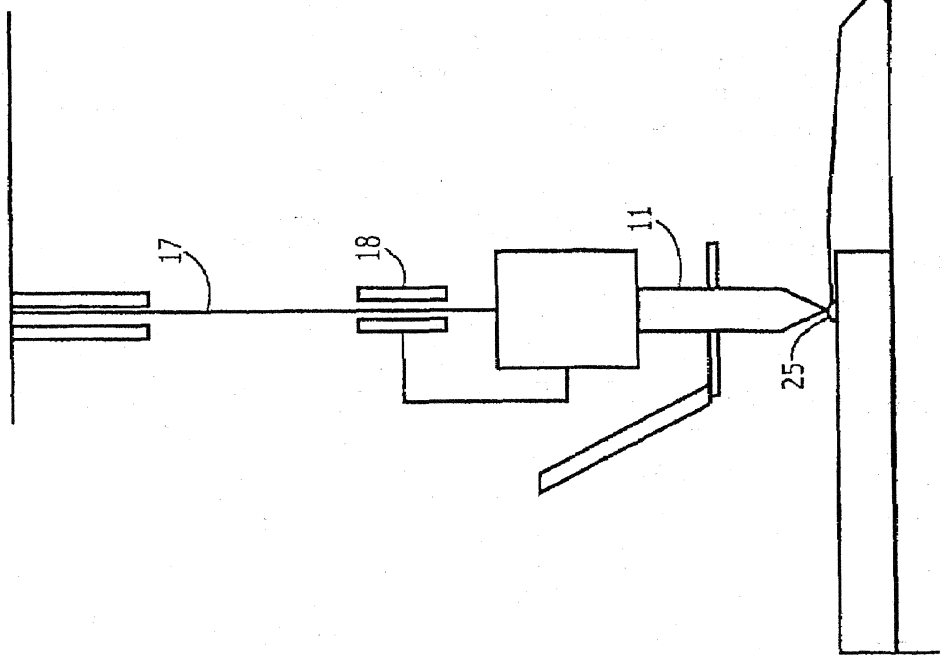

FIG. 2C

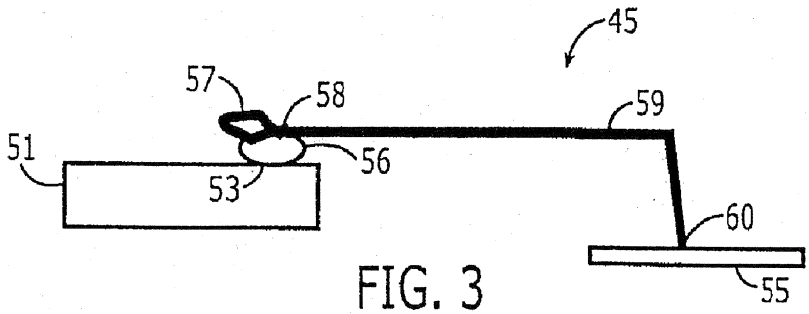

FIG. 3

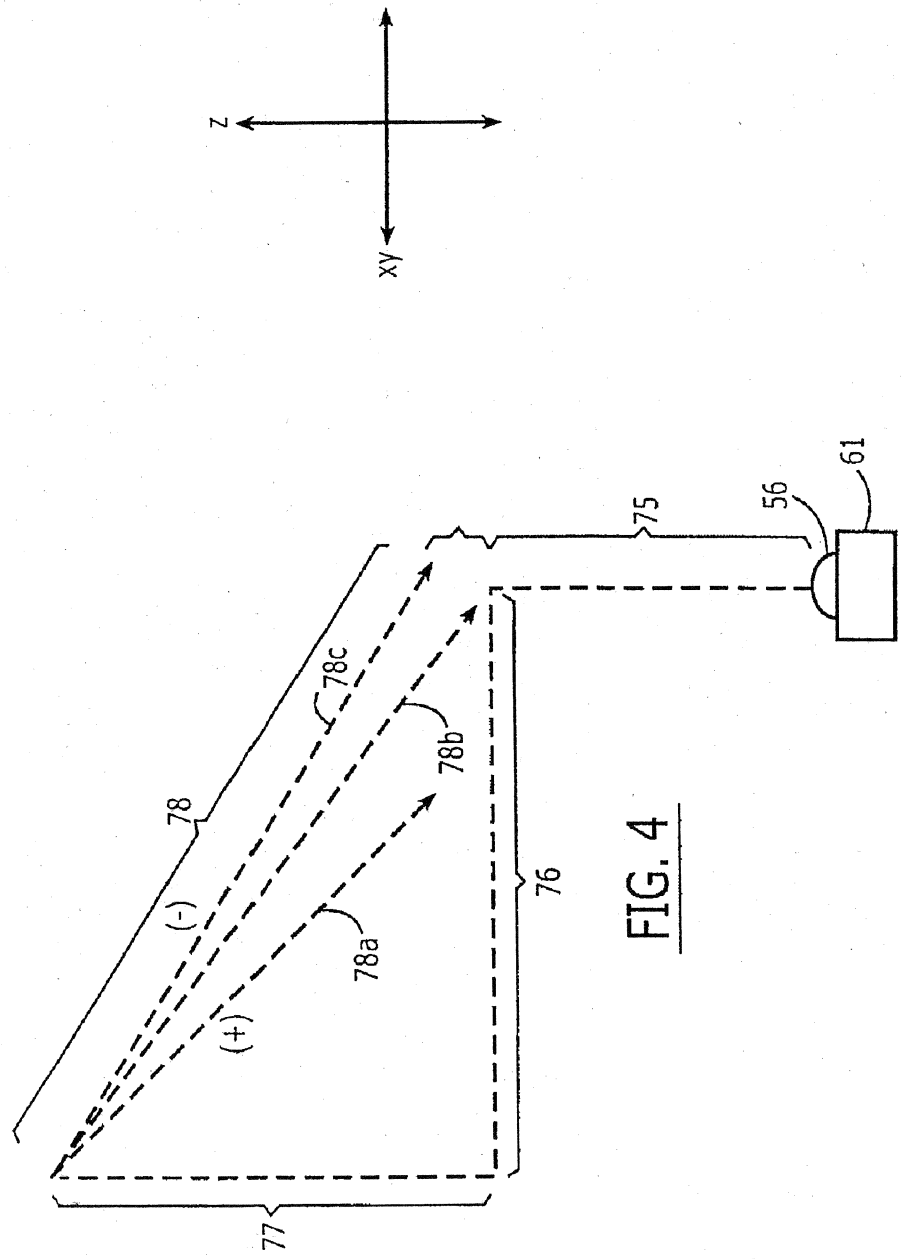

FIG. 4

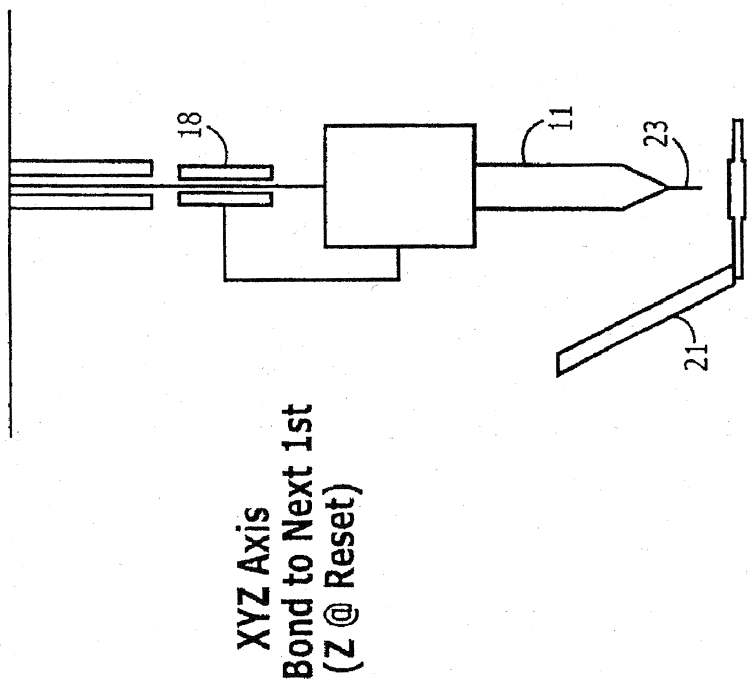

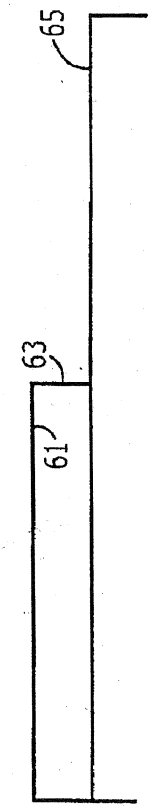

FIG. 5A

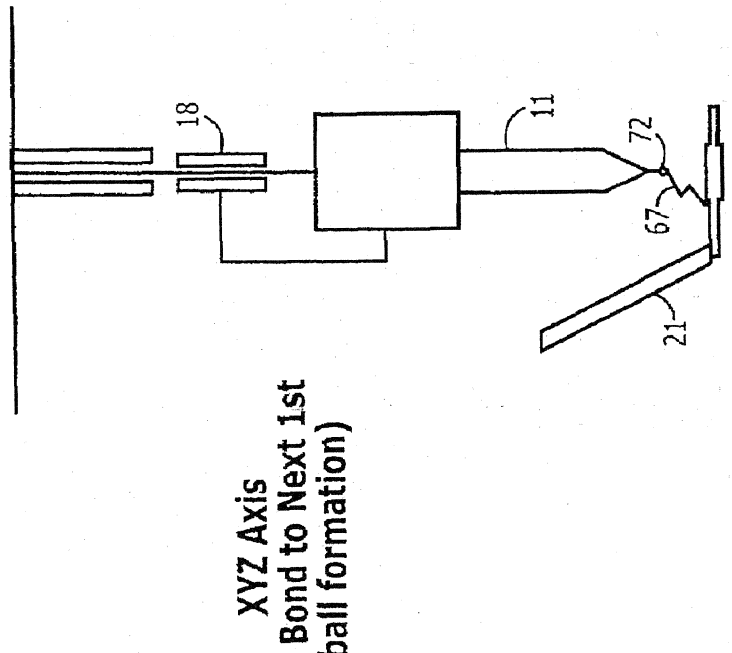
18
11
72
67
21
XYZ Axis
2nd Bond to Next 1st
(ball formation)

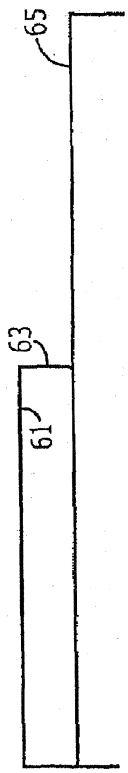
65
63
61

FIG. 5B

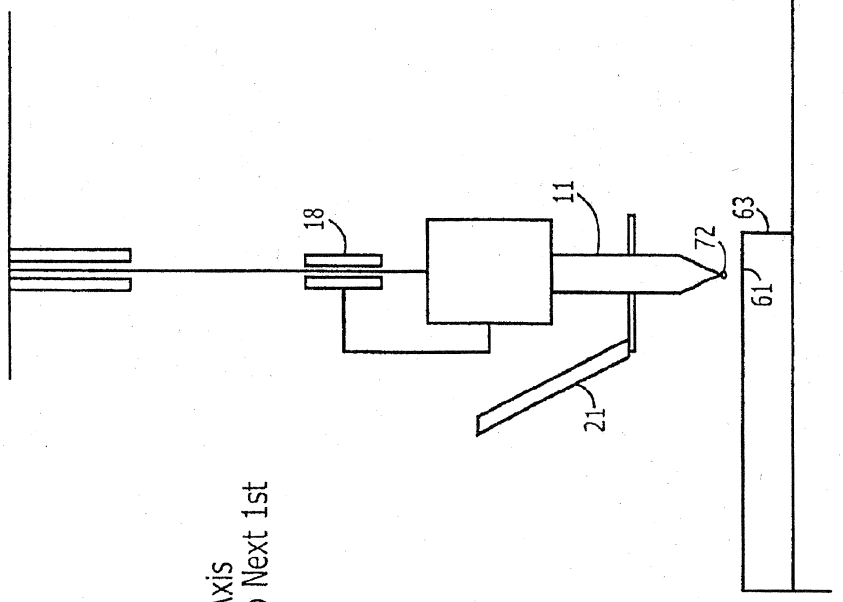

FIG. 5C

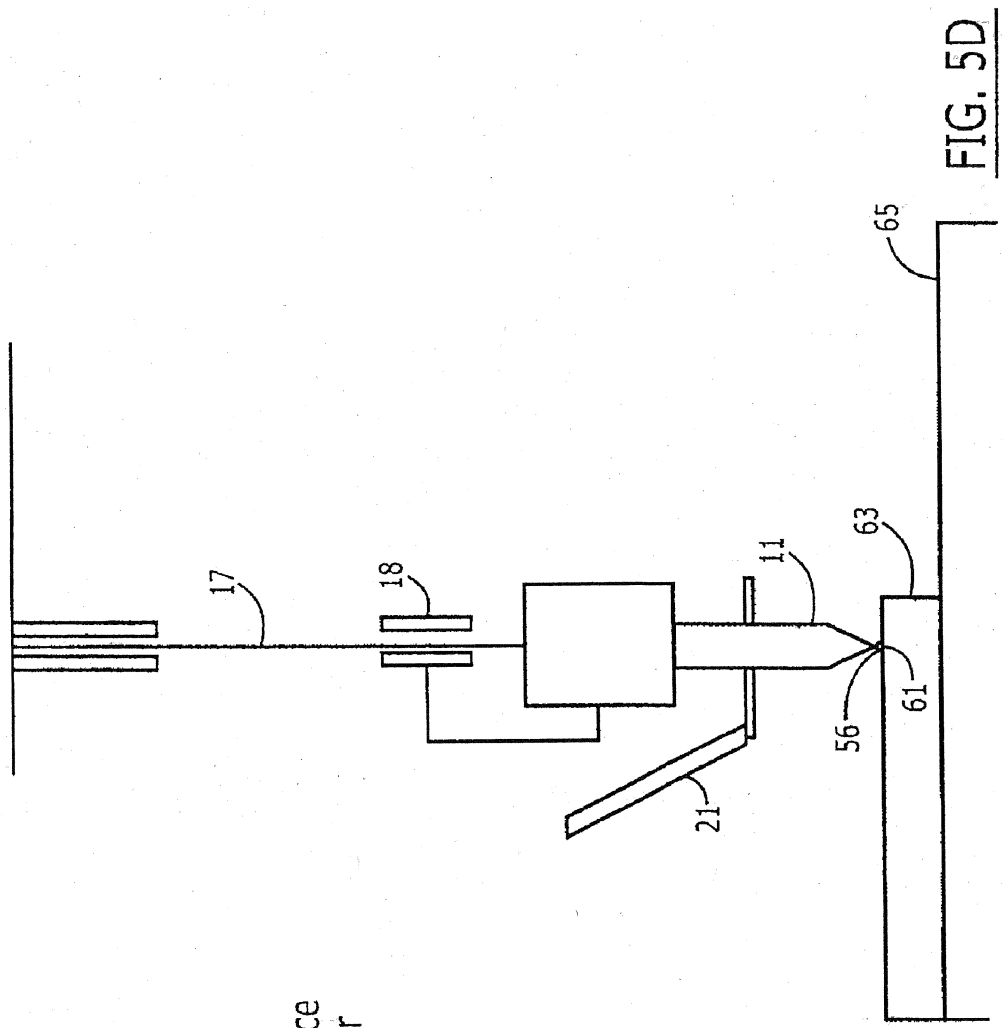

FIG. 5D

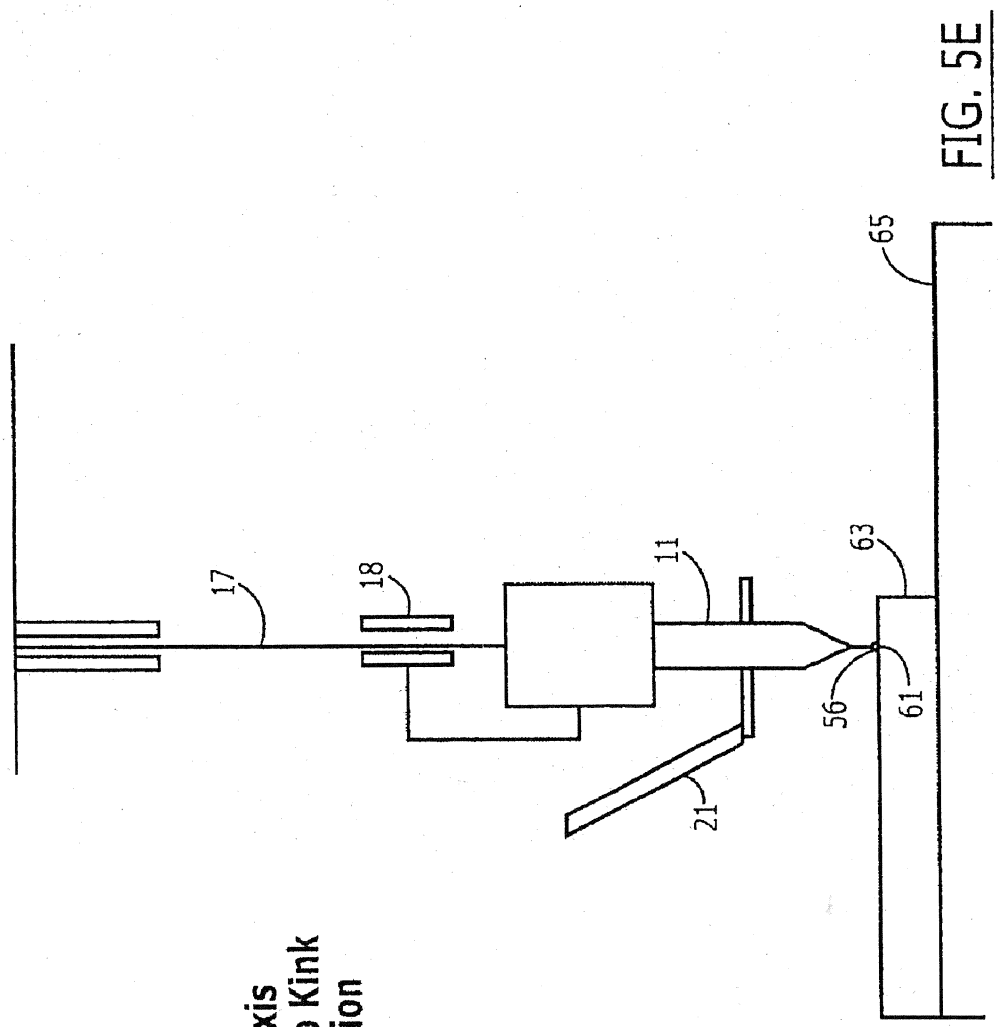

FIG. 5E

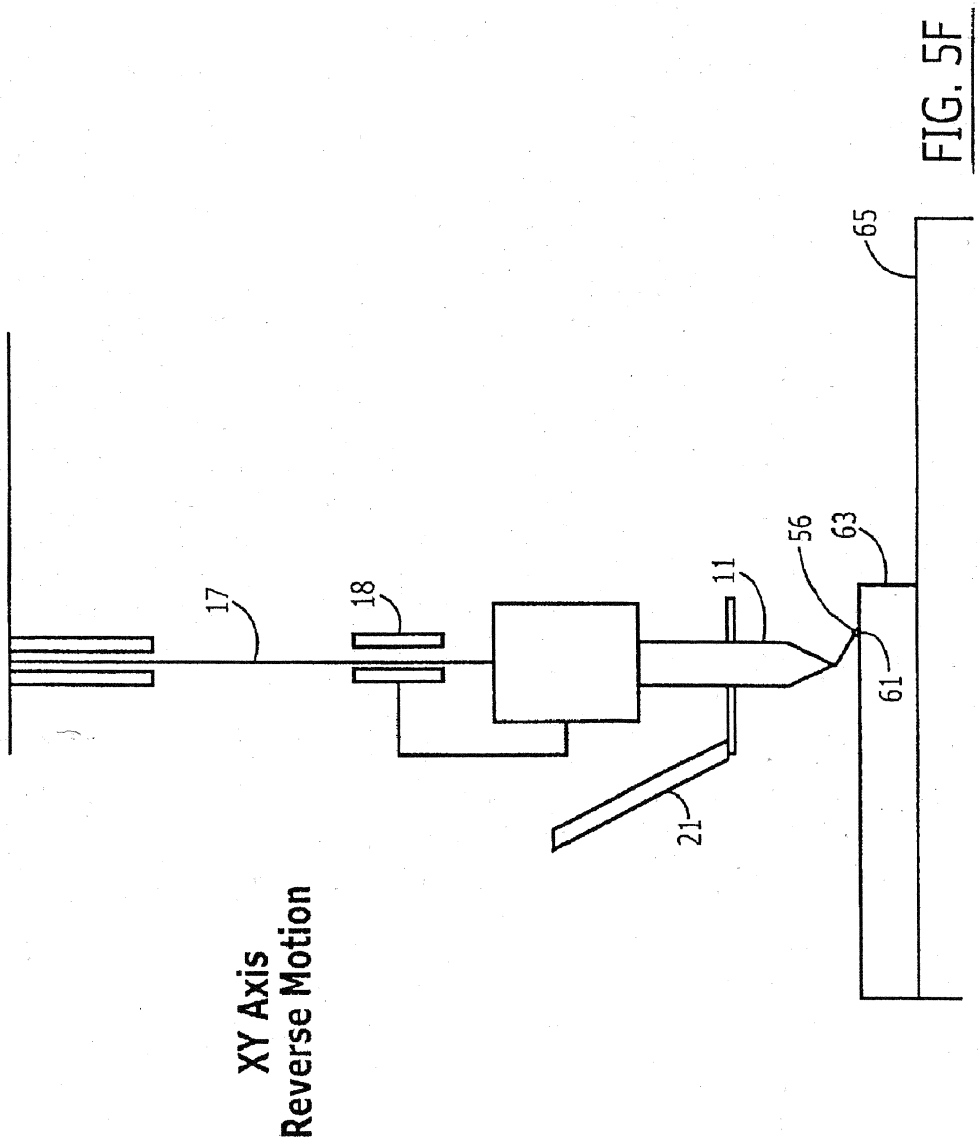

FIG. 5F

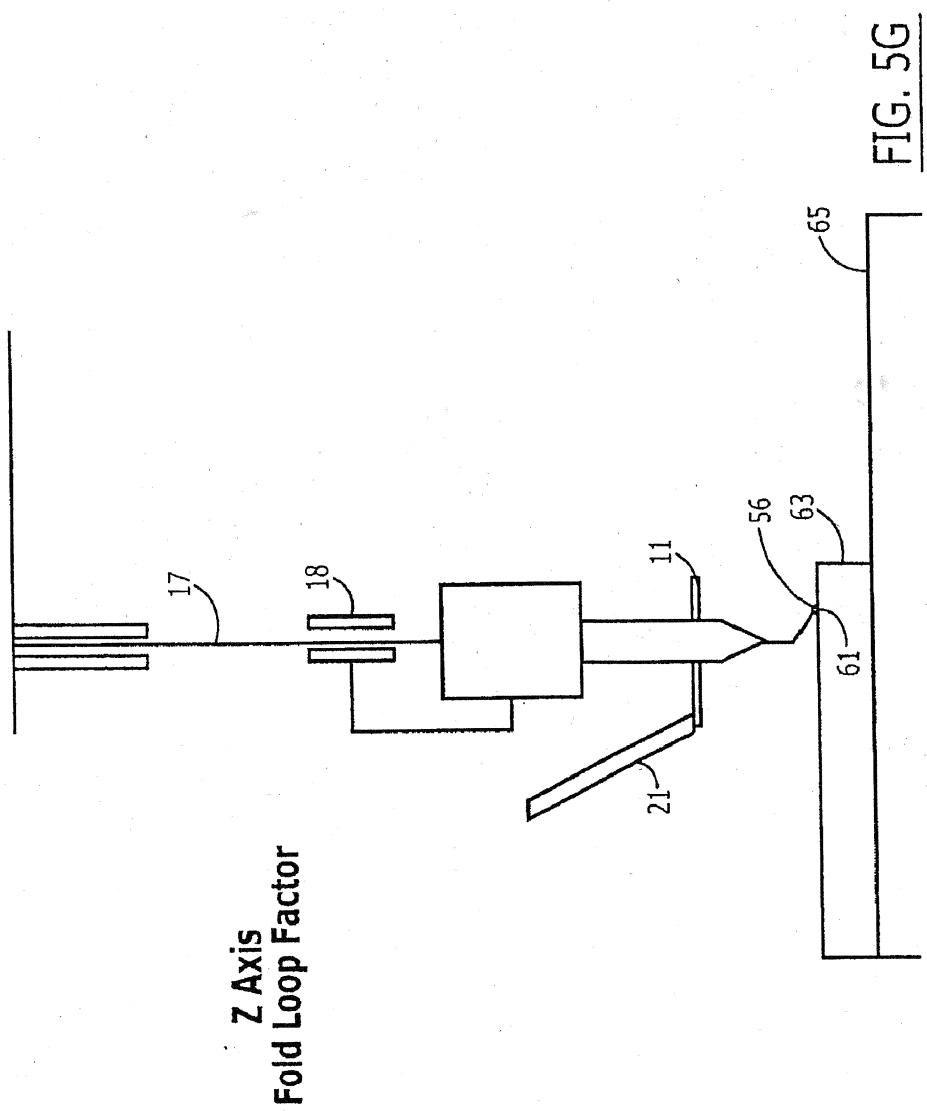

FIG. 5G

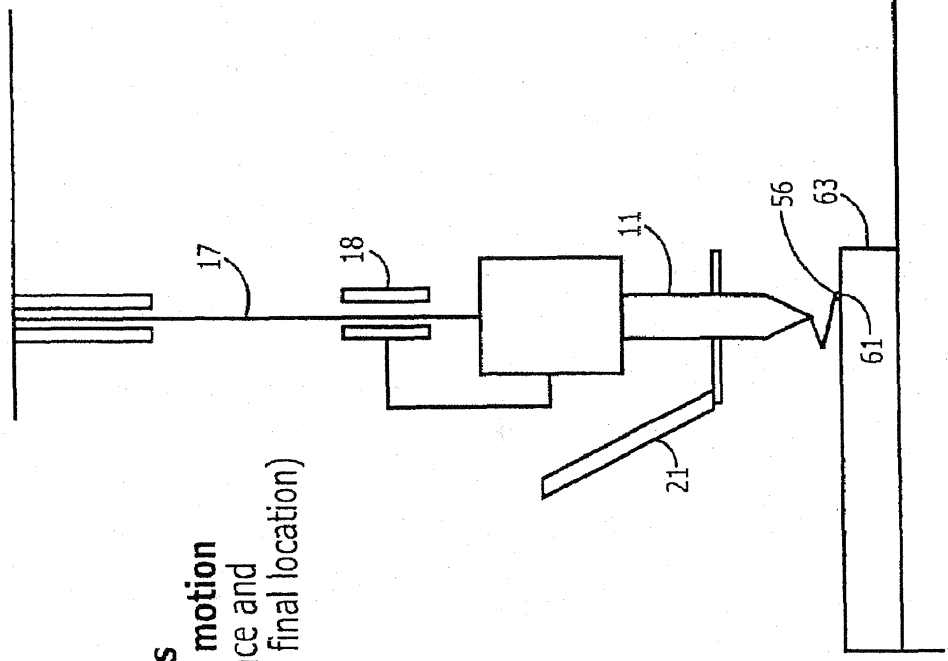
17
18
11
56
63
65
61
21
Z Axis
Fold Return motion
(Fold distance and
height controls the final location)

FIG. 5H

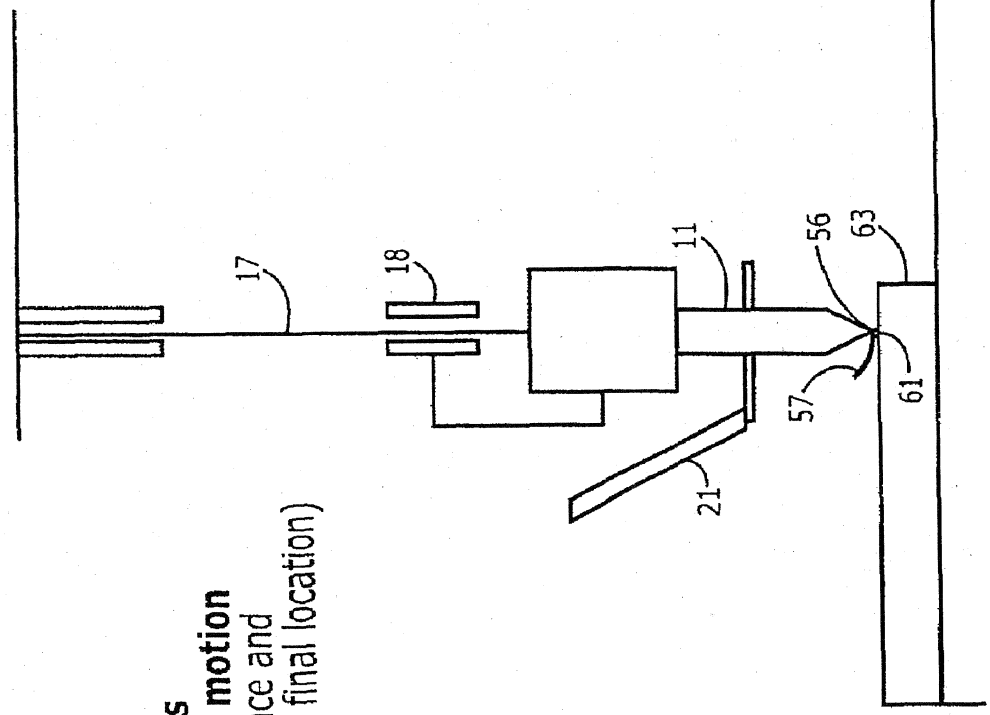
Z Axis
Fold Return motion
(Fold distance and
height controls the final location)
17
18
11
56
63
65
57
61
21

FIG. 5I

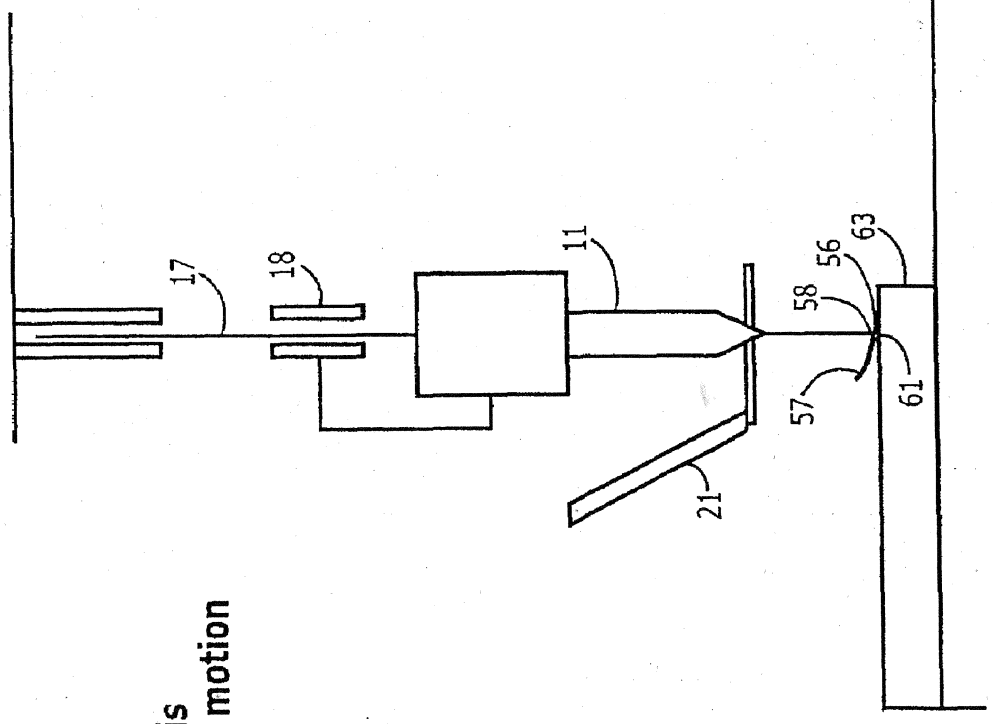

FIG. 5J

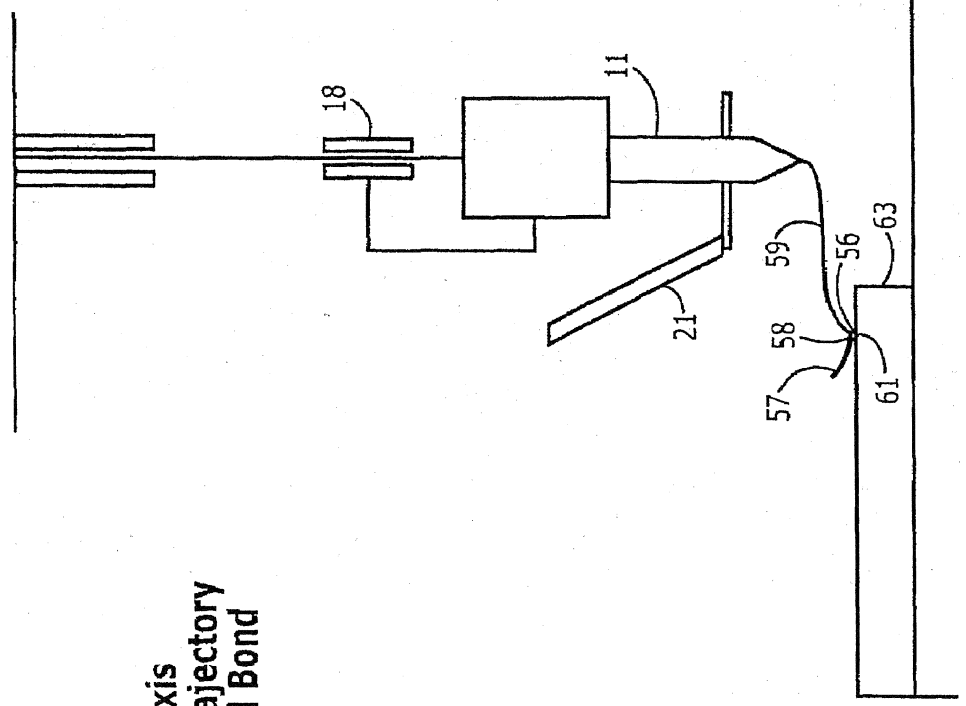
XYZ Axis
Looping Trajectory
to Second Bond
18
11
21
59
56
63
58
57
61
65

FIG. 5K

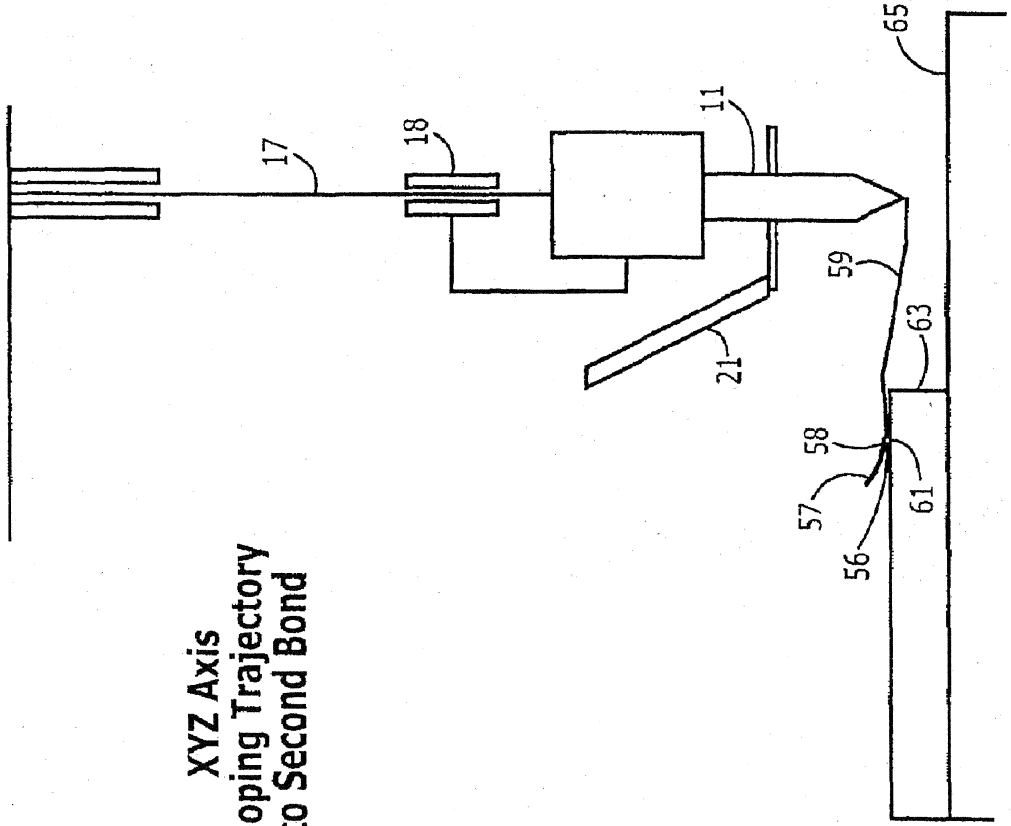
XYZ Axis
Looping Trajectory
to Second Bond
17
18
11
65
59
63
21
58
57
56
61

FIG. 5L

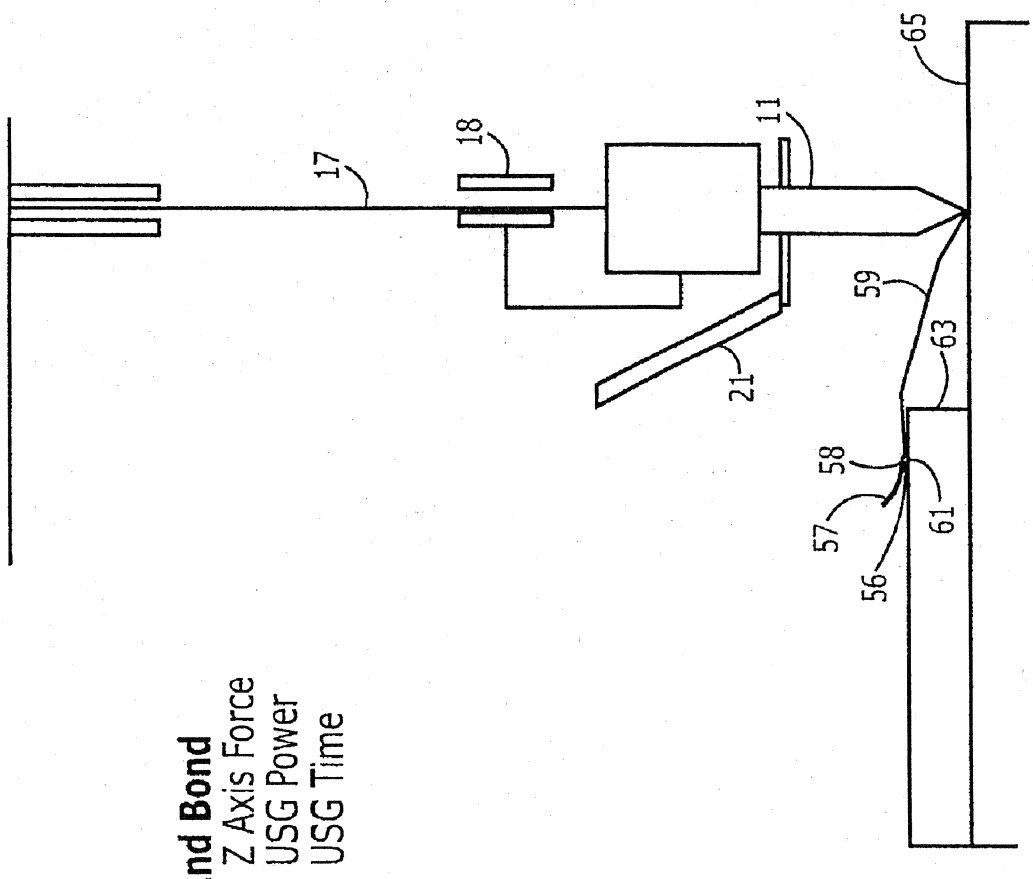

2nd Bond
- Z Axis Force
- USG Power
- USG Time

FIG. 5M

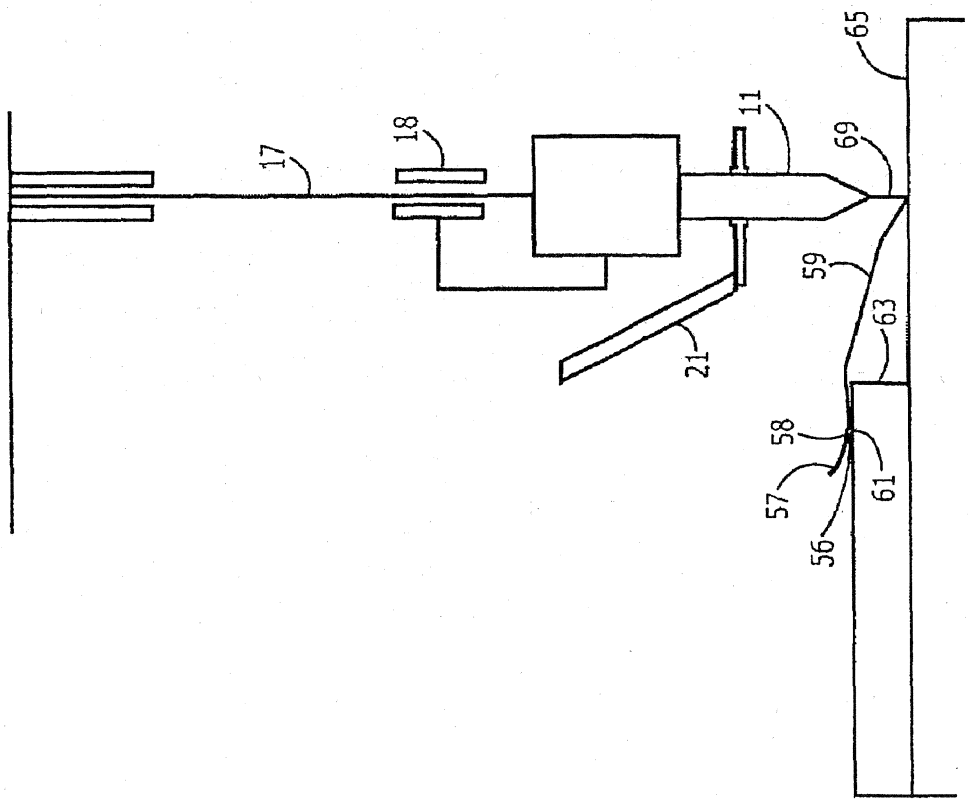

FIG. 5N

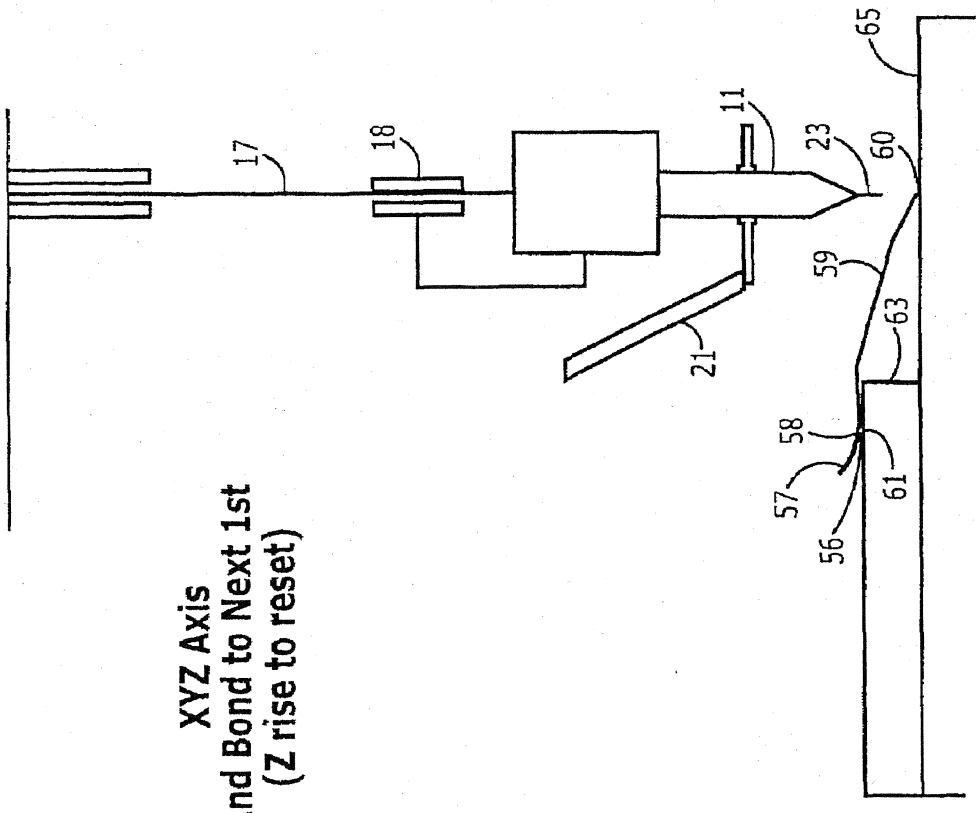
XYZ Axis
2nd Bond to Next 1st
(Z rise to reset)
17
18
11
23
60
65
59
63
21
58
57
56
61

FIG. 5O

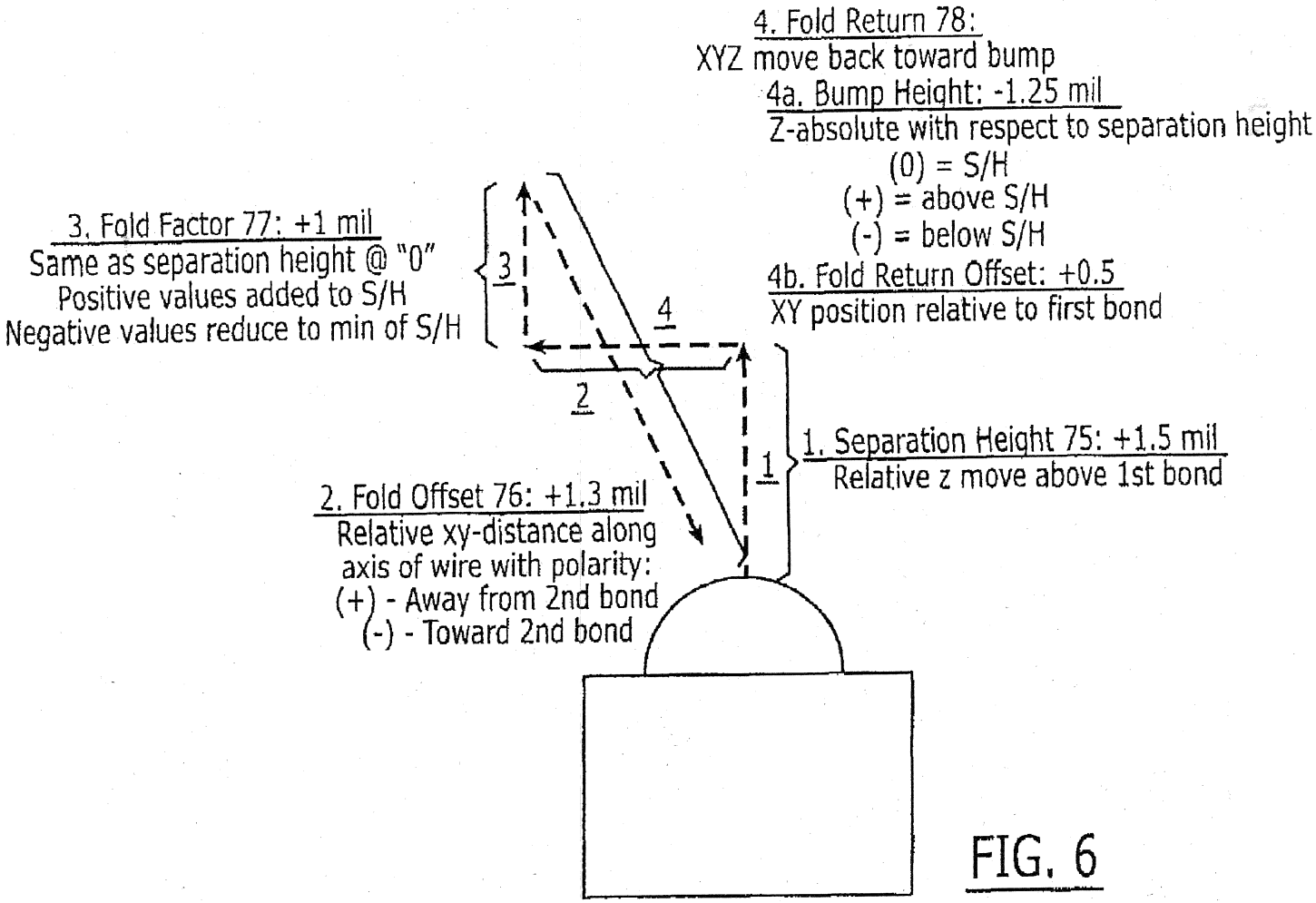
4. Fold Return 78:
XYZ move back toward bump
4a. Bump Height: -1.25 mil
Z-absolute with respect to separation height
(0) = S/H
(+) = above S/H
(-) = below S/H
4b. Fold Return Offset: +0.5
XY position relative to first bond
3. Fold Factor 77: +1 mil
Same as separation height @ "0"
Positive values added to S/H
Negative values reduce to min of S/H
3
4
2
1
1. Separation Height 75: +1.5 mil
Relative z move above 1st bond
2. Fold Offset 76: +1.3 mil
Relative xy-distance along
axis of wire with polarity:
(+) - Away from 2nd bond
(-) - Toward 2nd bond

FIG. 6

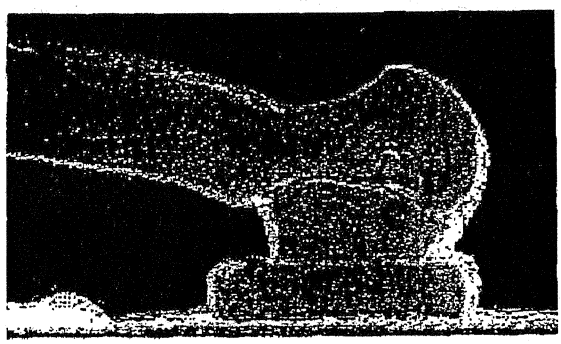

FIG. 7A

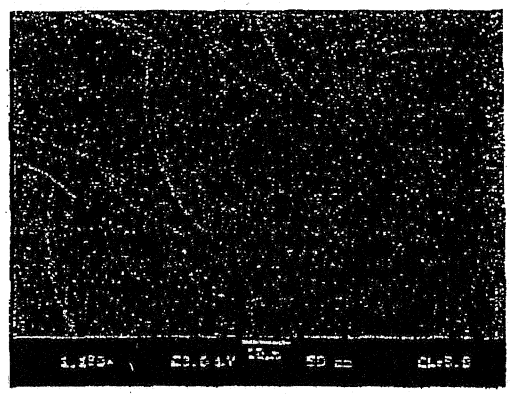

FIG. 7B

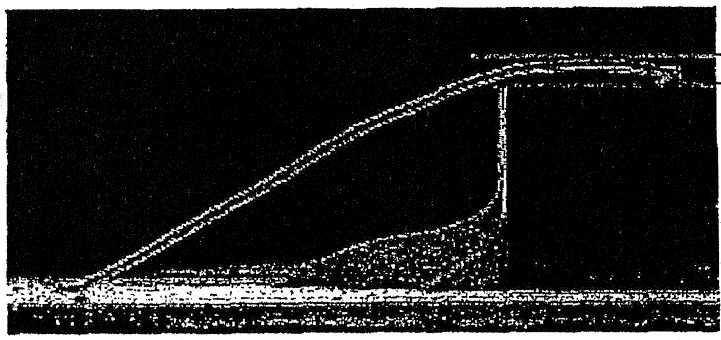

FIG. 8A

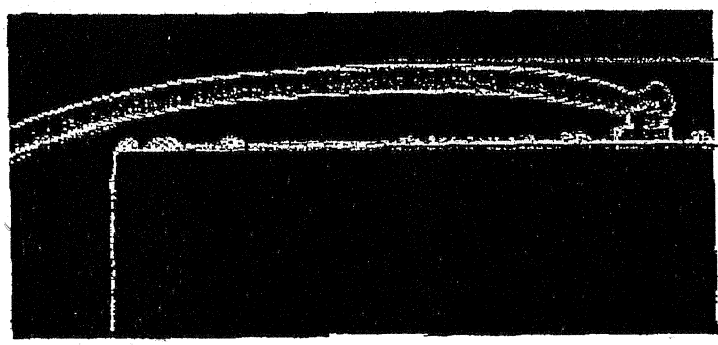

FIG. 8B