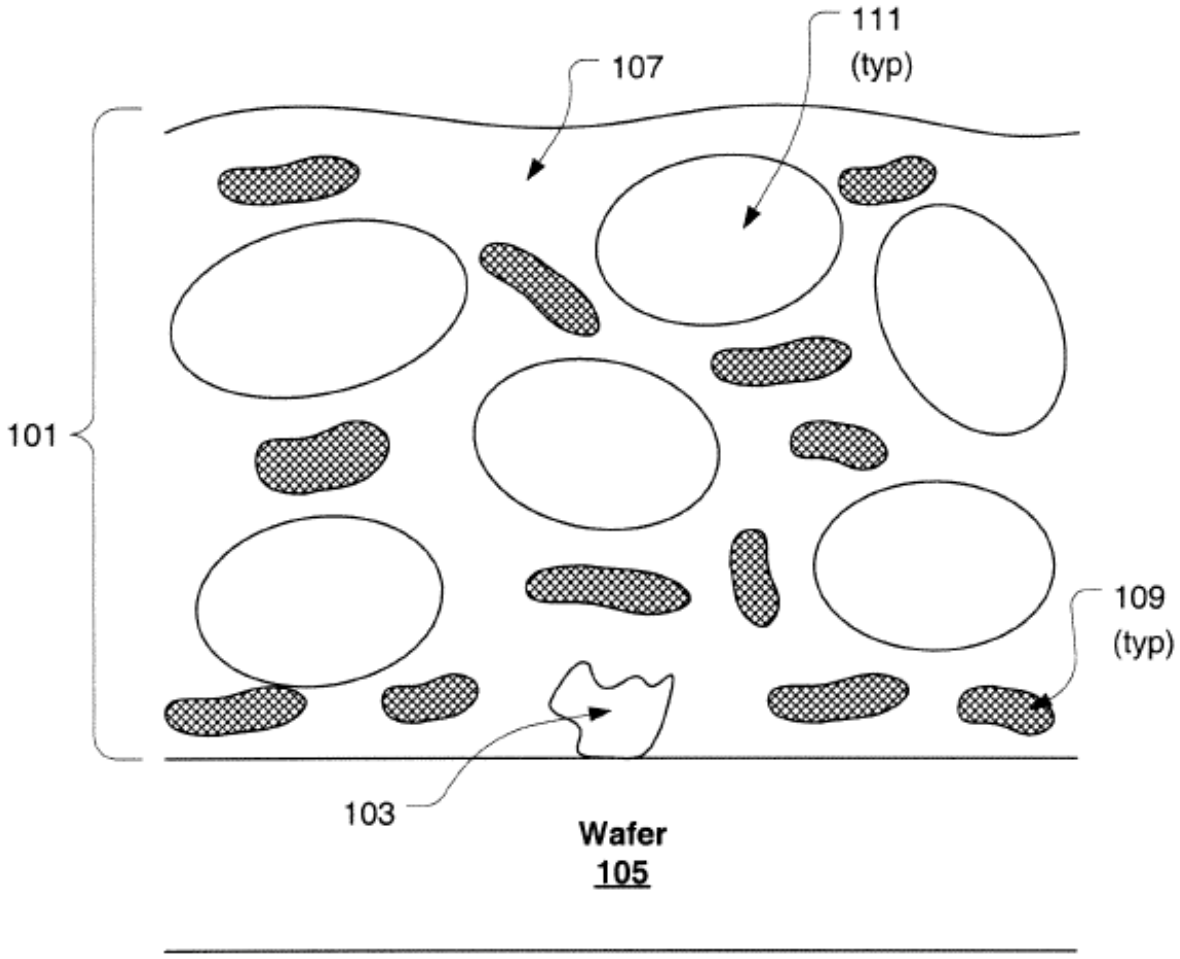

Fig. 1

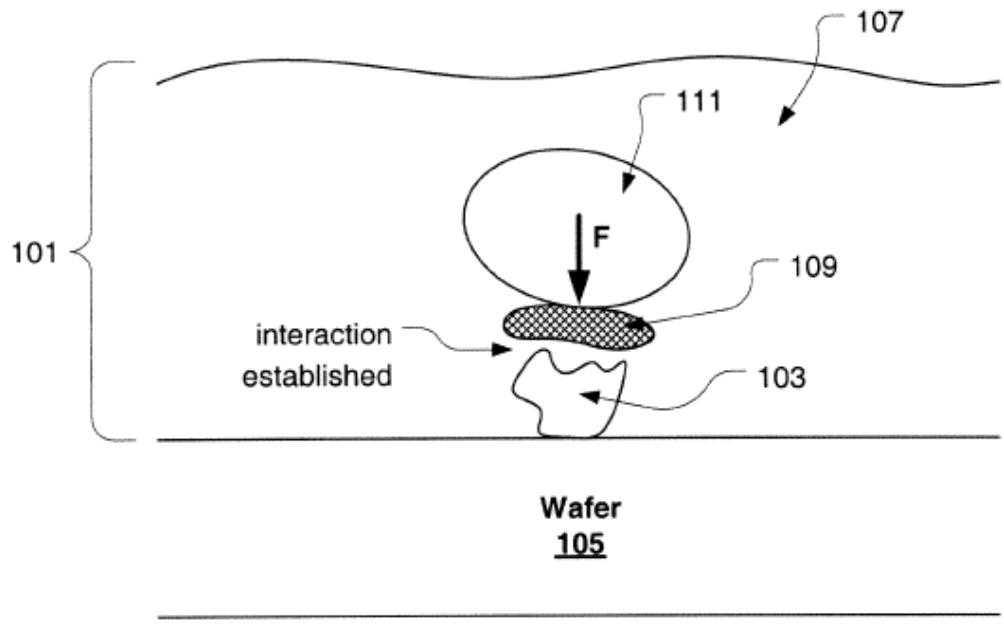
107
111
F
109
101
interaction
established
103
Wafer
105

Fig. 2A

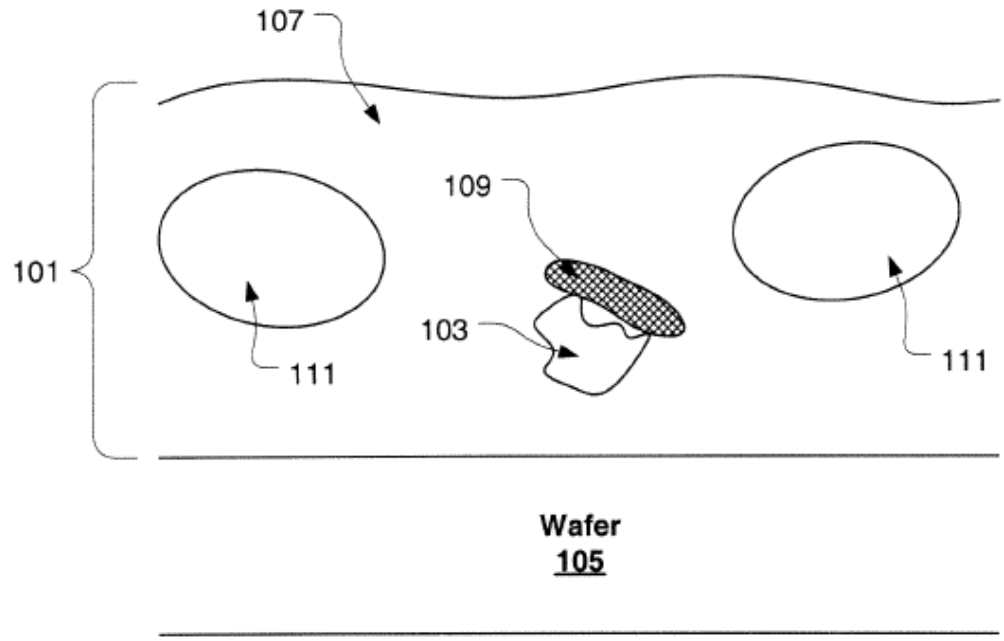
107
109
101
103
111
111
Wafer
105

Fig. 2B

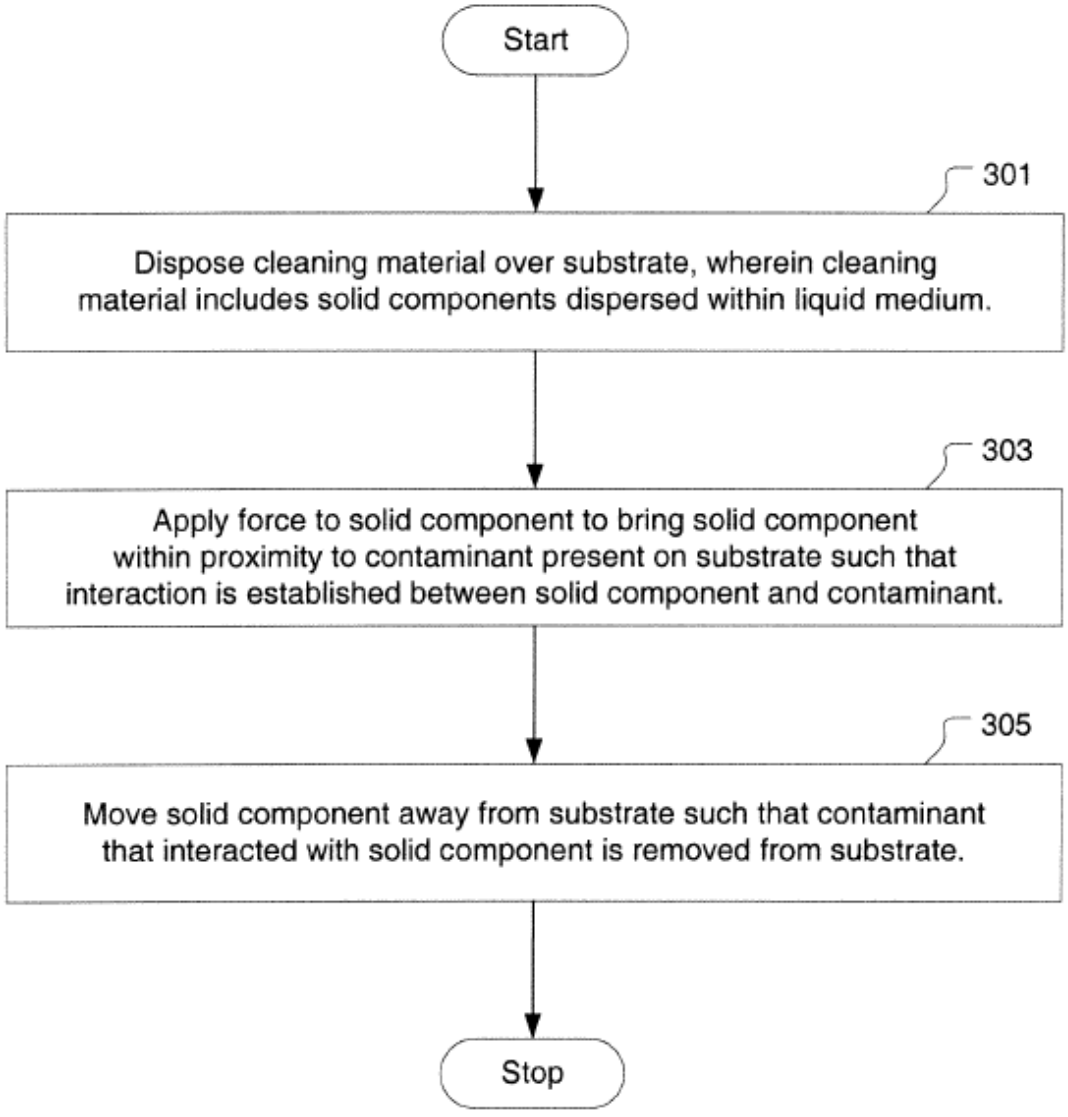
Start
301
Dispose cleaning material over substrate, wherein cleaning material includes solid components dispersed within liquid medium.
303
Apply force to solid component to bring solid component within proximity to contaminant present on substrate such that interaction is established between solid component and contaminant.
305
Move solid component away from substrate such that contaminant that interacted with solid component is removed from substrate.
Stop

Fig. 3

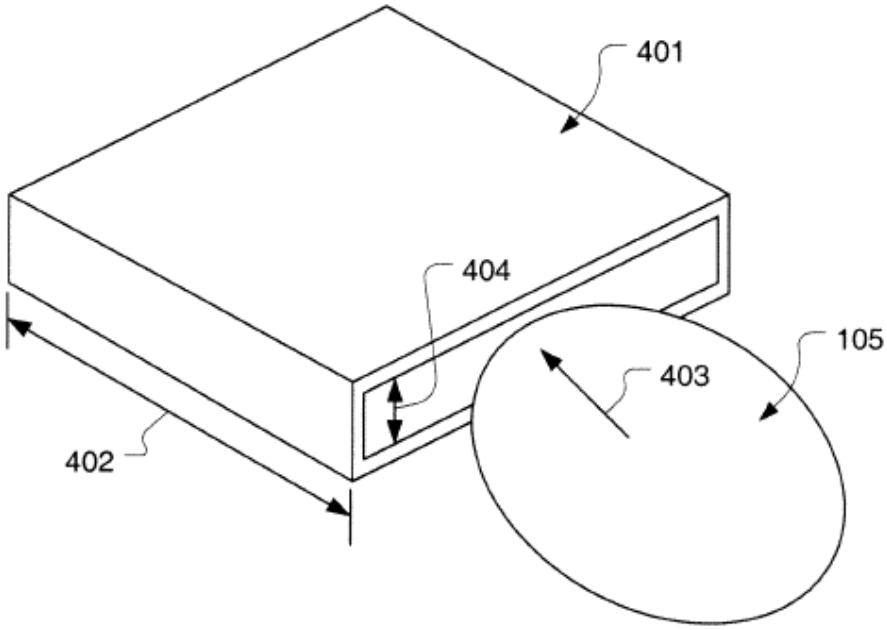
401
404
105
403
402

Fig. 4A

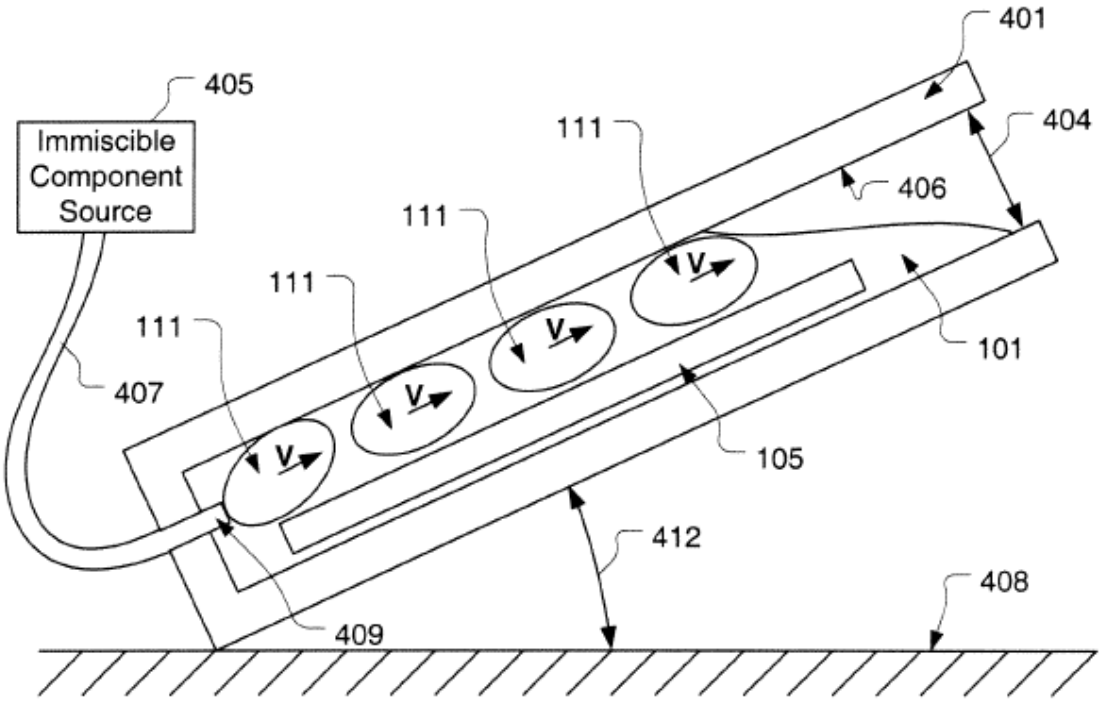
401
405
Immiscible
Component
Source
111
404
406
111
111
111
101
407
105
412
409
408

Fig. 4B

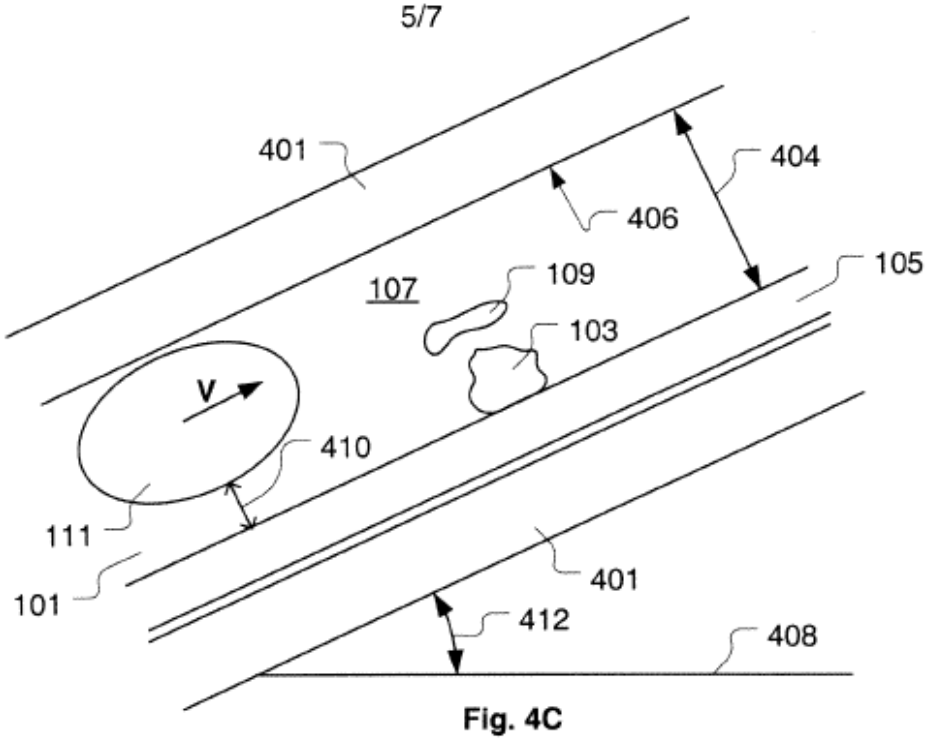
401
404
406
105
107
109
103
V
410
111
101
401
412
408

Fig. 4C

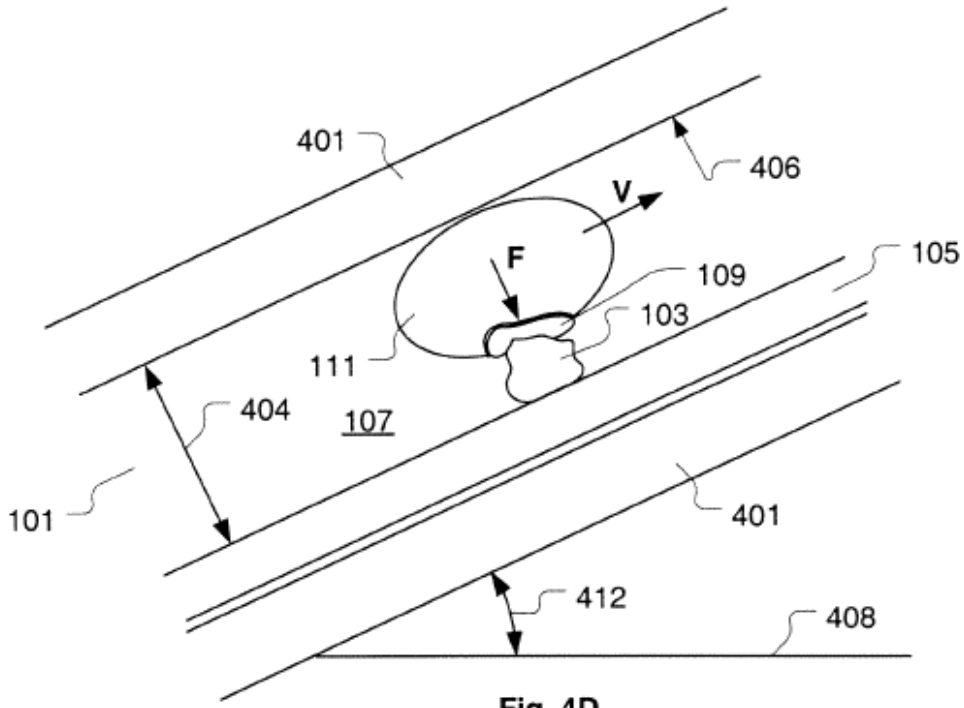
401
406
V
F
105
109
103
111
404
107
101
401
412
408

Fig. 4D

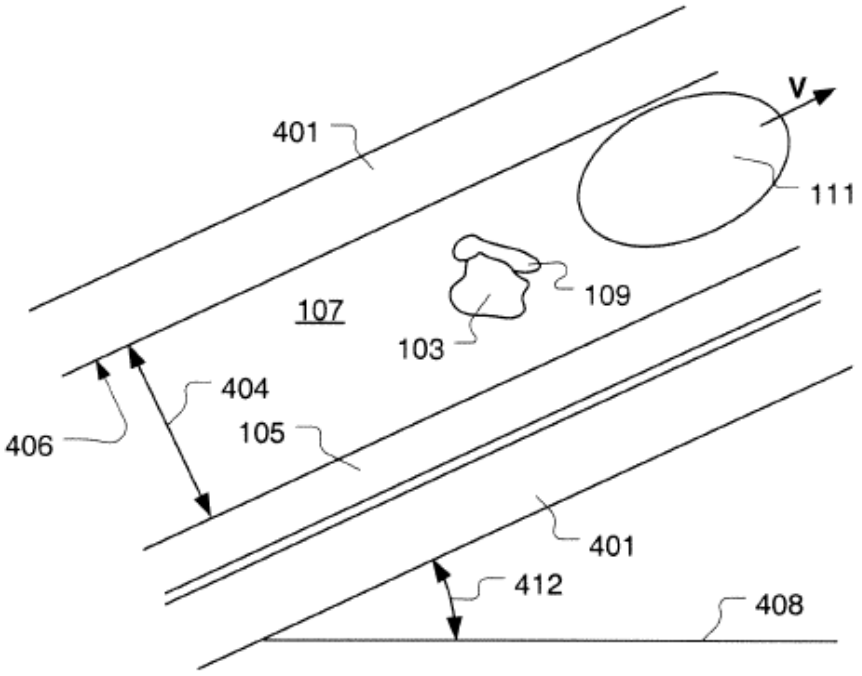
401
V
111
107
109
103
404
406
105
401
412
408

Fig. 4E

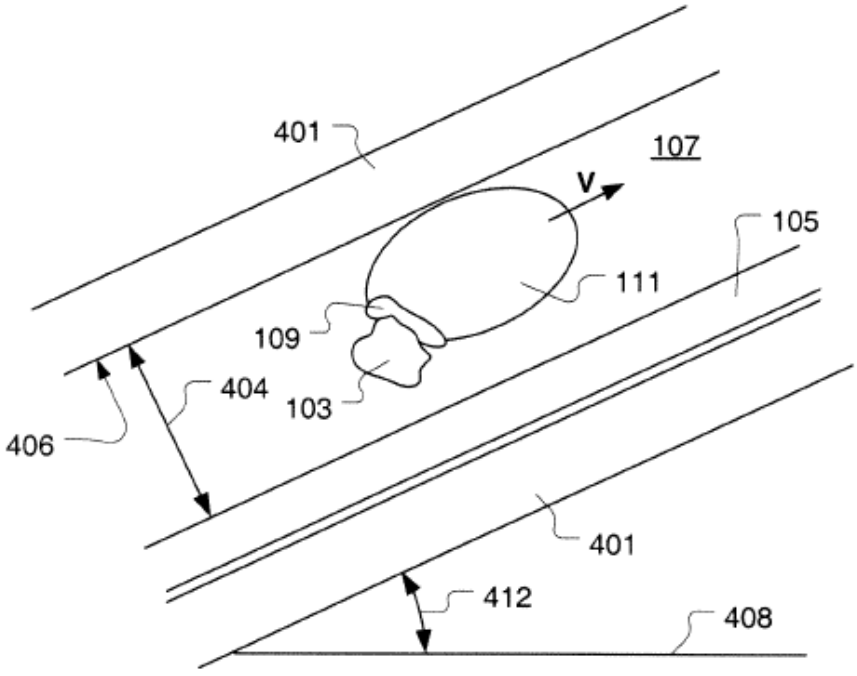
401
107
V
105
111
109
404
103
406
401
412
408

Fig. 4F

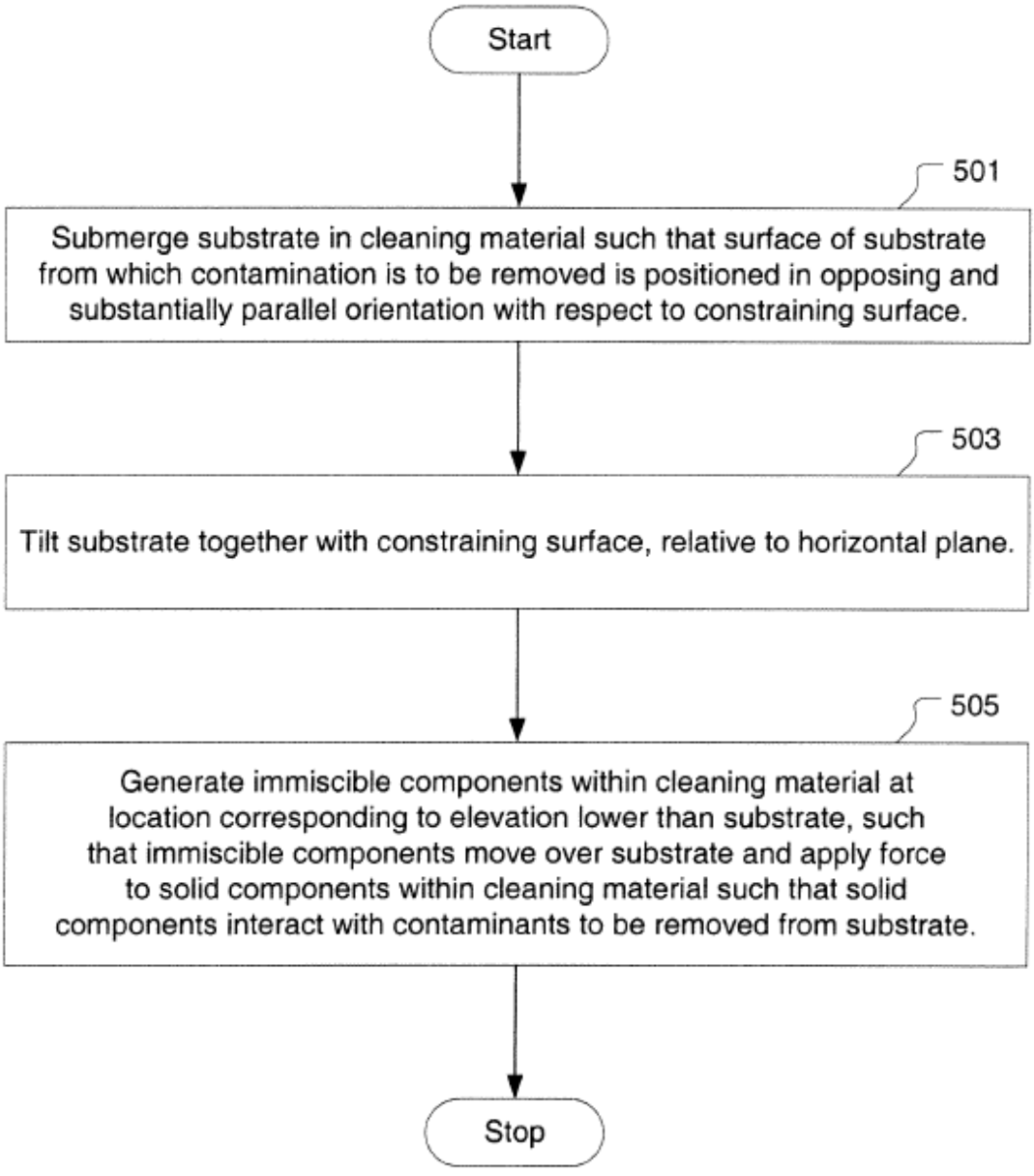
Start
501
Submerge substrate in cleaning material such that surface of substrate from which contamination is to be removed is positioned in opposing and substantially parallel orientation with respect to constraining surface.
503
Tilt substrate together with constraining surface, relative to horizontal plane.
505
Generate immiscible components within cleaning material at location corresponding to elevation lower than substrate, such that immiscible components move over substrate and apply force to solid components within cleaning material such that solid components interact with contaminants to be removed from substrate.
Stop

Fig. 5