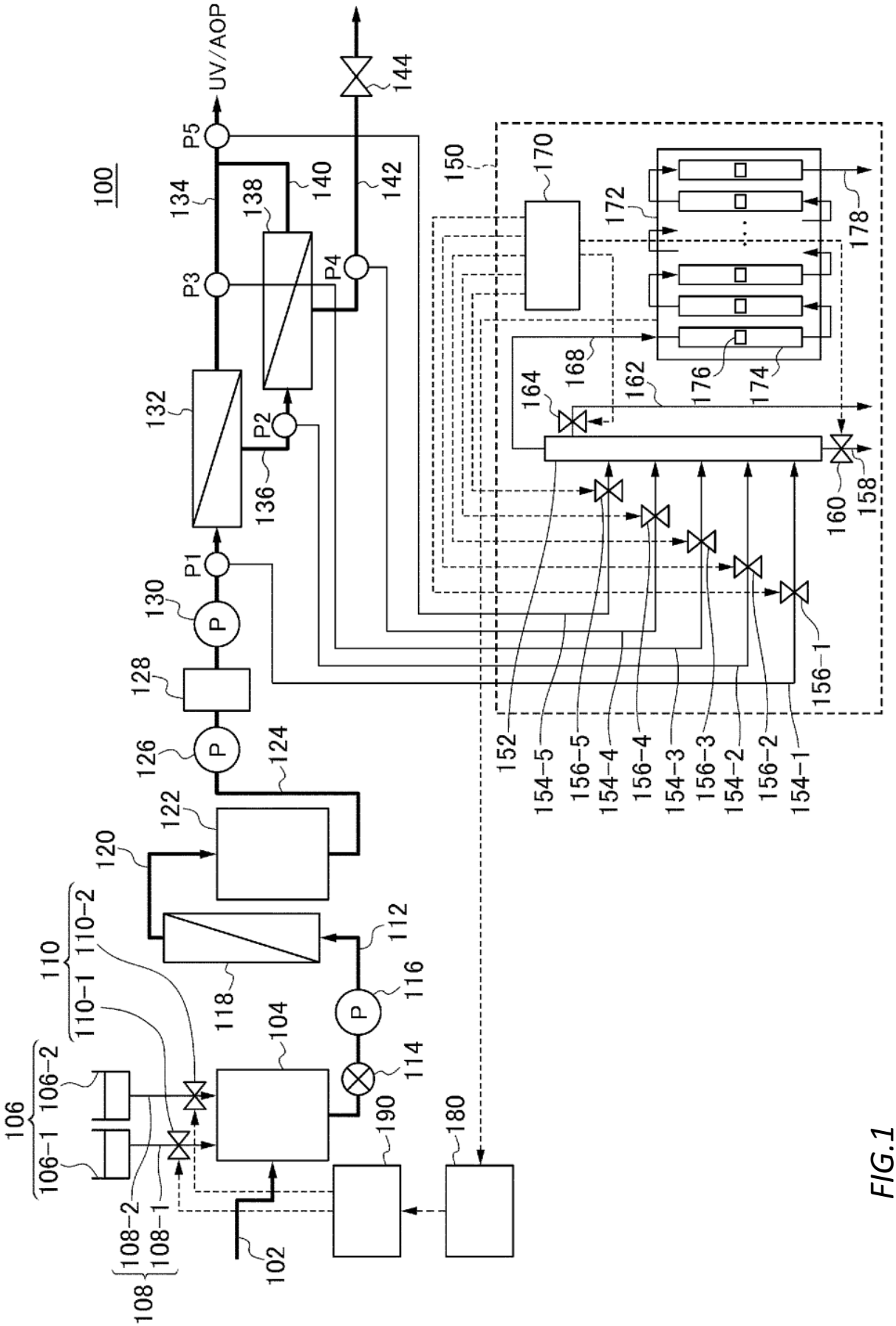
100
UV/AOP
P5
P3
P4
P2
P1
134
138
140
142
144
132
136
130
128
126
124
122
120
110
110-1
110-2
112
118
116
104
114
106
106-1
106-2
108
108-1
108-2
102
190
180
150
170
172
178
168
164
162
176
174
160
158
152
154-5
156-5
154-4
156-4
154-3
156-3
154-2
156-2
154-1
156-1

FIG.1

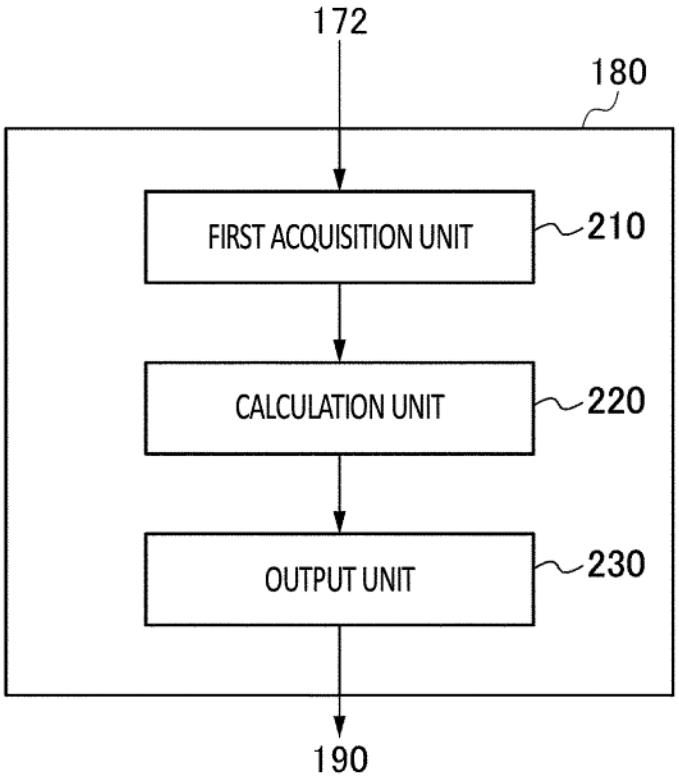
172
180
FIRST ACQUISITION UNIT
210
CALCULATION UNIT
220
OUTPUT UNIT
230
190

FIG.2

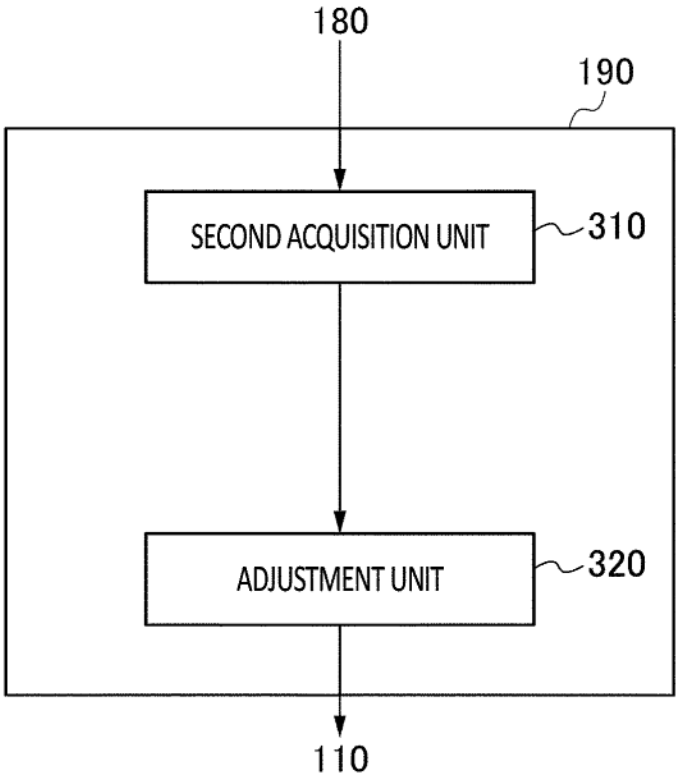
180
190
SECOND ACQUISITION UNIT
310
ADJUSTMENT UNIT
320
110

FIG.3

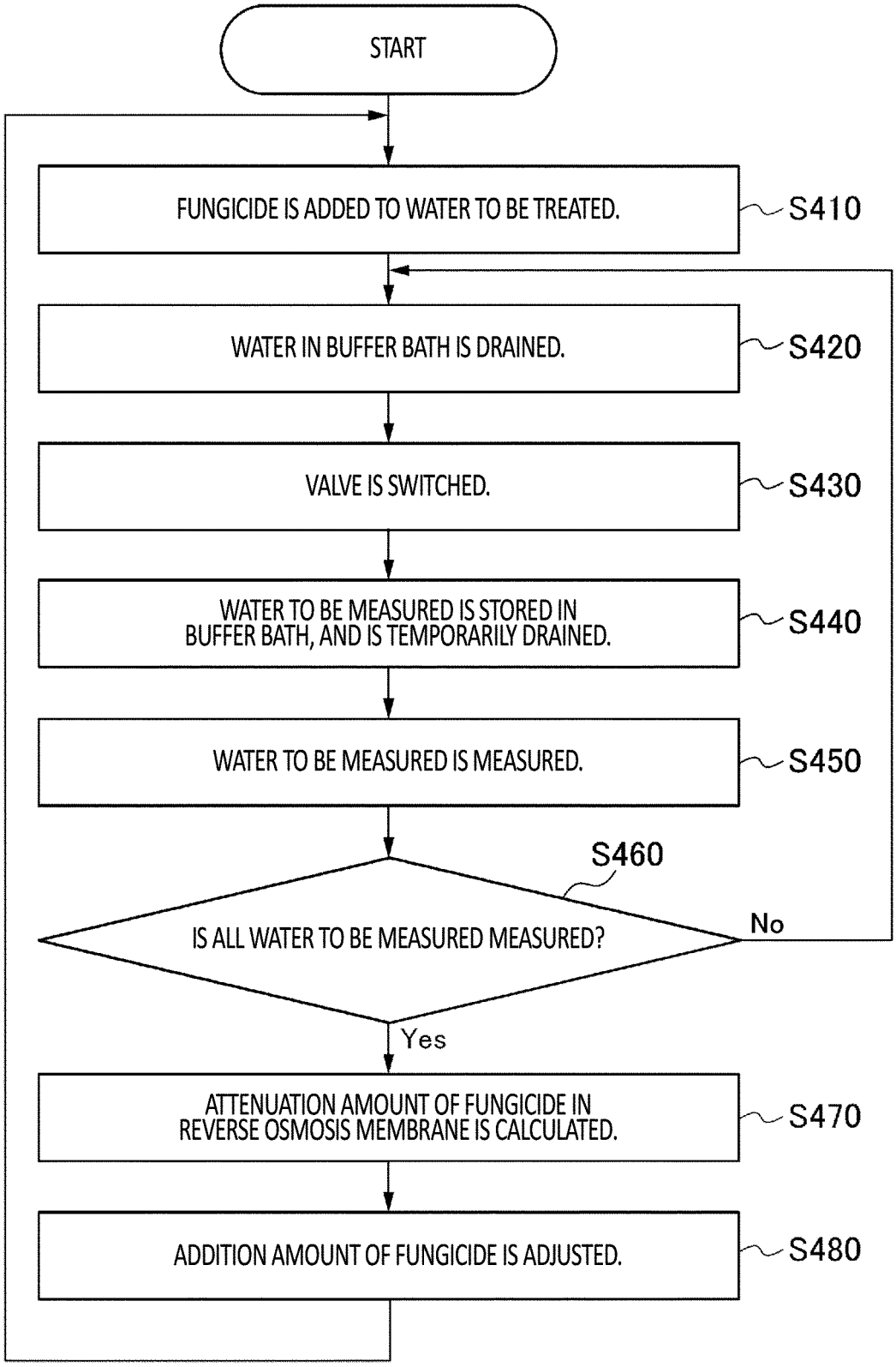
START
FUNGICIDE IS ADDED TO WATER TO BE TREATED.
S410
WATER IN BUFFER BATH IS DRAINED.
S420
VALVE IS SWITCHED.
S430
WATER TO BE MEASURED IS STORED IN BUFFER BATH, AND IS TEMPORARILY DRAINED.
S440
WATER TO BE MEASURED IS MEASURED.
S450
S460
IS ALL WATER TO BE MEASURED MEASURED?
No
Yes
ATTENUATION AMOUNT OF FUNGICIDE IN REVERSE OSMOSIS MEMBRANE IS CALCULATED.
S470
ADDITION AMOUNT OF FUNGICIDE IS ADJUSTED.
S480

FIG.4

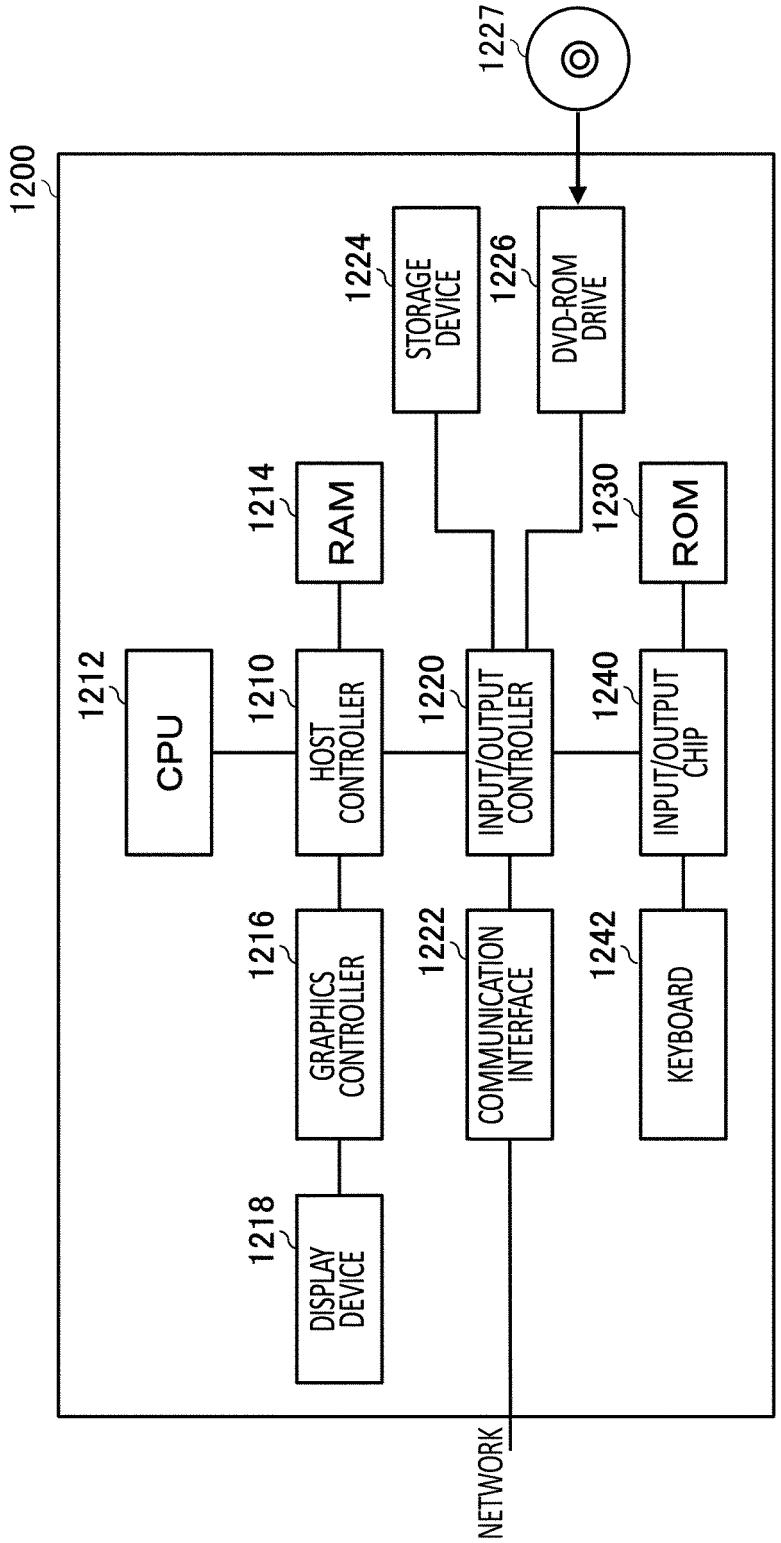
1200
1227
1224
STORAGE DEVICE
1226
DVD-ROM DRIVE
1214
RAM
1230
ROM
1212
CPU
1210
HOST CONTROLLER
1220
INPUT/OUTPUT CONTROLLER
1240
INPUT/OUTPUT CHIP
1216
GRAPHICS CONTROLLER
1222
COMMUNICATION INTERFACE
1242
KEYBOARD
1218
DISPLAY DEVICE
NETWORK

FIG.5