(12) INTERNATIONAL APPLICATION PUBLISHED UNDER THE PATENT COOPERATION TREATY (PCT)

(19) World Intellectual Property Organization
International Bureau

(43) International Publication Date
21 December 2007 (21.12.2007)

PCT

(10) International Publication Number
WO 2007/146276 A1

(51) International Patent Classification:
*E21B 10/22* (2006.01) *F16C 33/32* (2006.01)

(21) International Application Number:
PCT/US2007/013760

(22) International Filing Date: 11 June 2007 (11.06.2007)

(25) Filing Language: English

(26) Publication Language: English

(30) Priority Data:
60/812,539 9 June 2006 (09.06.2006) US
11/760,892 11 June 2007 (11.06.2007) US

(71) Applicant *(for all designated States except US)*: **BAKER HUGHES INCORPORATED** [US/US]; P.O. Box 4740, Houston, TX 77210-4740 (US).

(72) Inventor; and
(75) Inventor/Applicant *(for US only)*: **LIN, Chih, C.** [US/US]; 2206 Pincher Creek Drive, Spring, TX 77386 (US).

(74) Agents: **WELBORN, Brian, S.** et al.; BAKER HUGHES INCORPORATED, P.O. Box 4740, Houston, TX 77210-4740 (US).

(81) Designated States *(unless otherwise indicated, for every kind of national protection available)*: AE, AG, AL, AM, AT, AU, AZ, BA, BB, BG, BH, BR, BW, BY, BZ, CA, CH, CN, CO, CR, CU, CZ, DE, DK, DM, DO, DZ, EC, EE, EG, ES, FI, GB, GD, GE, GH, GM, GT, HN, HR, HU, ID, IL, IN, IS, JP, KE, KG, KM, KN, KP, KR, KZ, LA, LC, LK, LR, LS, LT, LU, LY, MA, MD, ME, MG, MK, MN, MW, MX, MY, MZ, NA, NG, NI, NO, NZ, OM, PG, PH, PL, PT, RO, RS, RU, SC, SD, SE, SG, SK, SL, SM, SV, SY, TJ, TM, TN, TR, TT, TZ, UA, UG, US, UZ, VC, VN, ZA, ZM, ZW.

(84) Designated States *(unless otherwise indicated, for every kind of regional protection available)*: ARIPO (BW, GH, GM, KE, LS, MW, MZ, NA, SD, SL, SZ, TZ, UG, ZM, ZW), Eurasian (AM, AZ, BY, KG, KZ, MD, RU, TJ, TM), European (AT, BE, BG, CH, CY, CZ, DE, DK, EE, ES, FI, FR, GB, GR, HU, IE, IS, IT, LT, LU, LV, MC, MT, NL, PL, PT, RO, SE, SI, SK, TR), OAPI (BF, BJ, CF, CG, CI, CM, GA, GN, GQ, GW, ML, MR, NE, SN, TD, TG).

**Declarations under Rule 4.17:**
— *as to applicant's entitlement to apply for and be granted a patent (Rule 4.17(ii))*
— *as to the applicant's entitlement to claim the priority of the earlier application (Rule 4.17(iii))*

**Published:**
— *with international search report*
— *before the expiration of the time limit for amending the claims and to be republished in the event of receipt of amendments*

*For two-letter codes and other abbreviations, refer to the "Guidance Notes on Codes and Abbreviations" appearing at the beginning of each regular issue of the PCT Gazette.*

(54) Title: SURFACE TEXTURES FOR EARTH BORING BITS

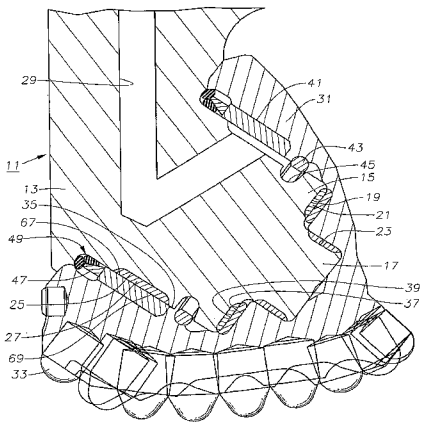


(57) Abstract: A texture pattern is applied to bearing surfaces of earth-boring bits, especially the bearings of earth boring bits of the roller cutter variety. The textured surface that may be applied to either or both sides of the thrust washer faces, bearing faces, inlays, or thrust shoulders, or a combination thereof.

WO 2007/146276 A1