FIG. 1

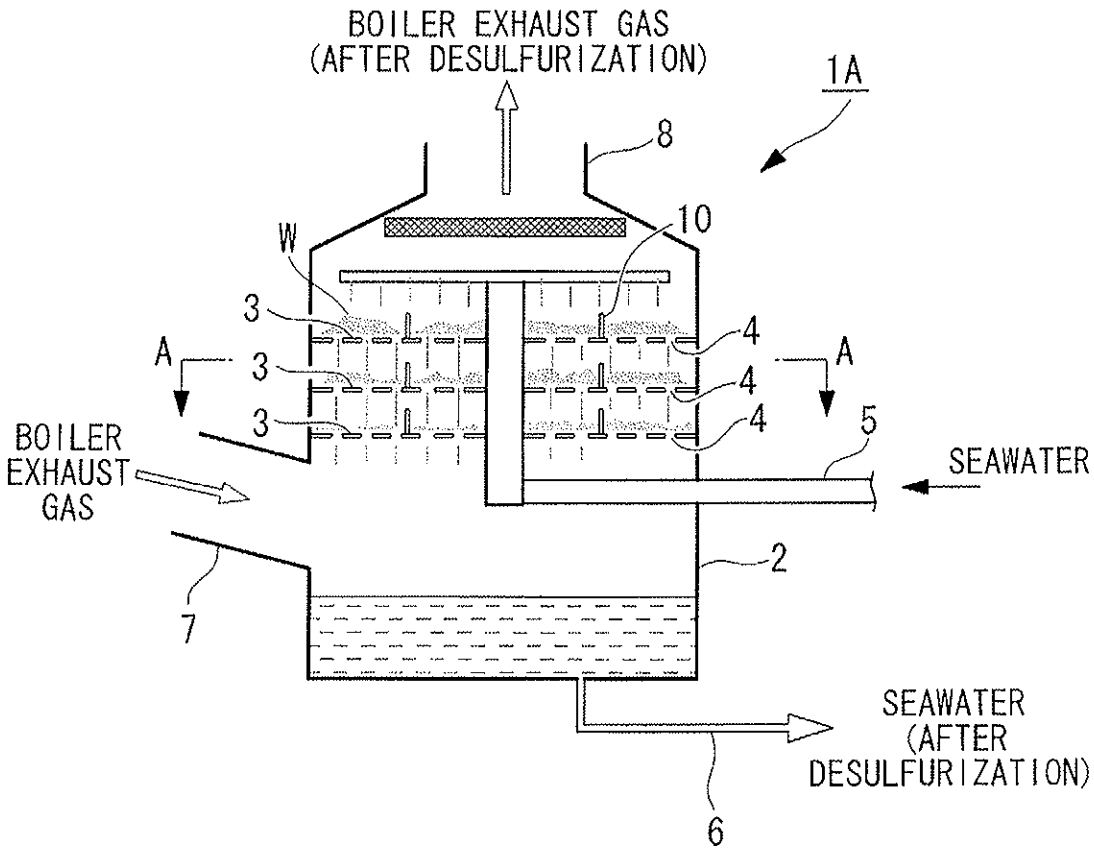
BOILER EXHAUST GAS
(AFTER DESULFURIZATION)
1A
8
10
W
3
3
3
A
A
4
4
4
5
SEAWATER
BOILER
EXHAUST
GAS
2
7
SEAWATER
(AFTER
DESULFURIZATION)
6

FIG. 2

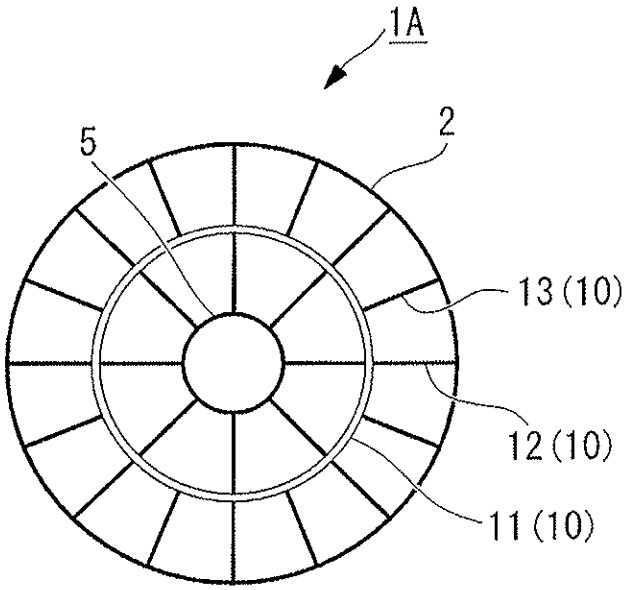
1A
2
5
13 (10)
12 (10)
11 (10)

FIG. 3

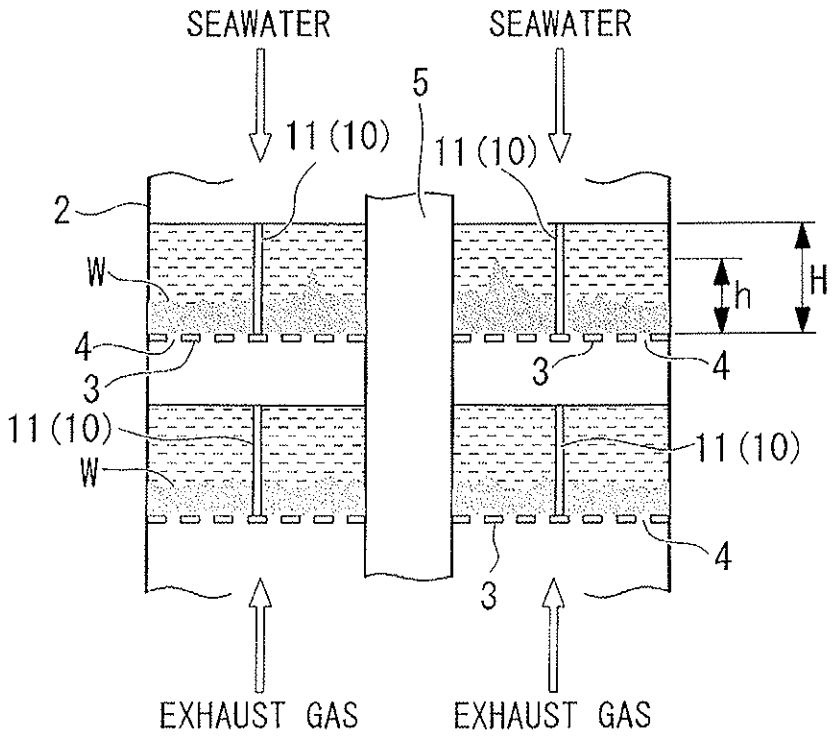
SEAWATER
SEAWATER
5
11 (10)
11 (10)
2
W
h
H
4
3
3
4
11 (10)
11 (10)
W
4
3
EXHAUST GAS
EXHAUST GAS

FIG. 4

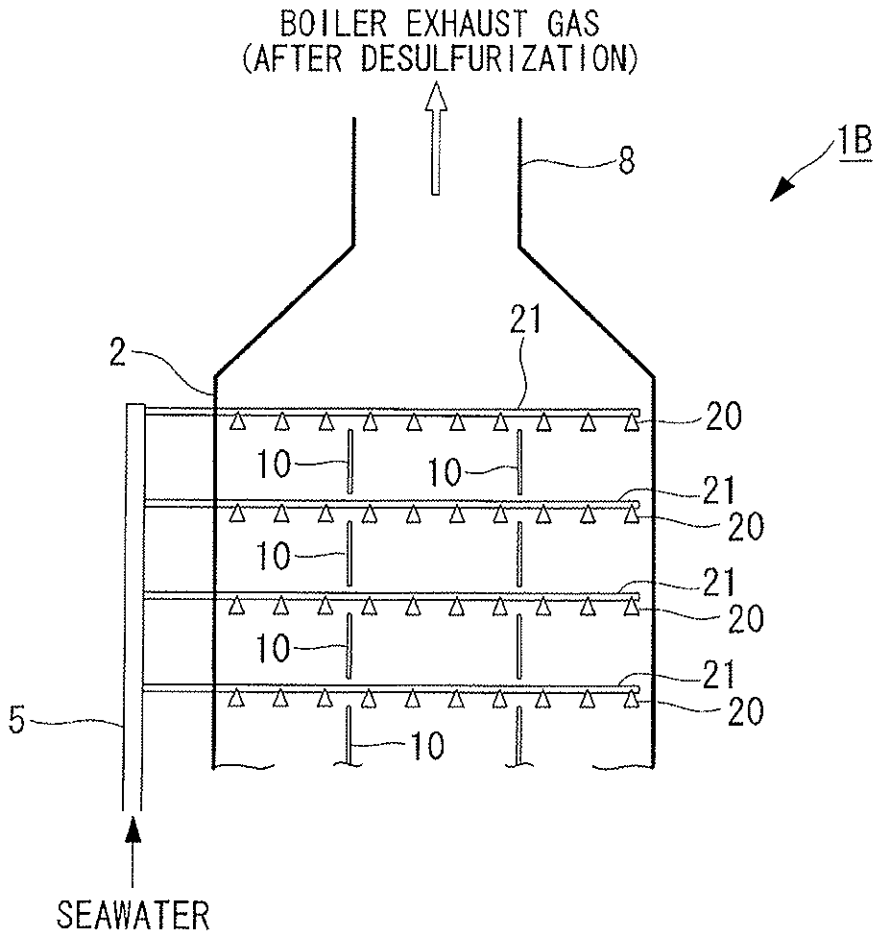
BOILER EXHAUST GAS
(AFTER DESULFURIZATION)
1B
8
21
2
20
10
10
21
20
10
21
20
10
21
20
5
10
SEAWATER

FIG. 5A

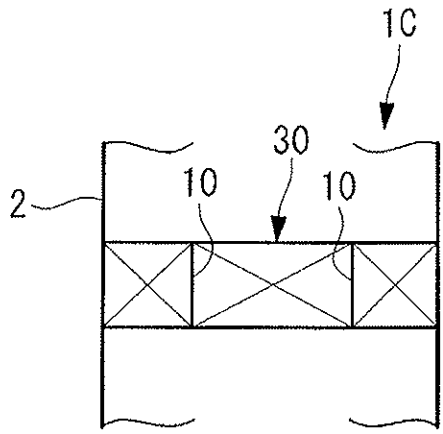

FIG. 5B

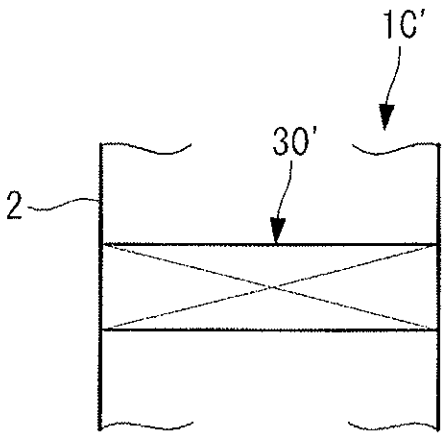

FIG. 6

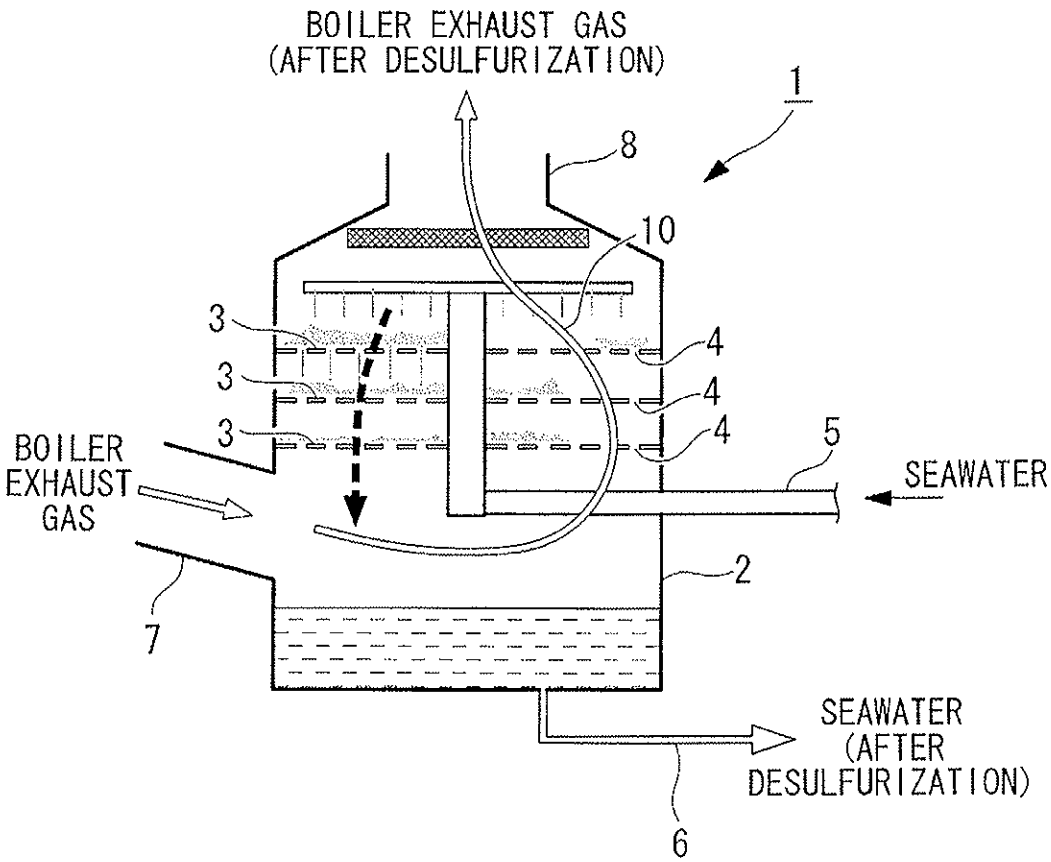
BOILER EXHAUST GAS
(AFTER DESULFURIZATION)
1
8
10
3
3
3
4
4
4
5
SEAWATER
BOILER
EXHAUST
GAS
2
7
SEAWATER
(AFTER
DESULFURIZATION)
6