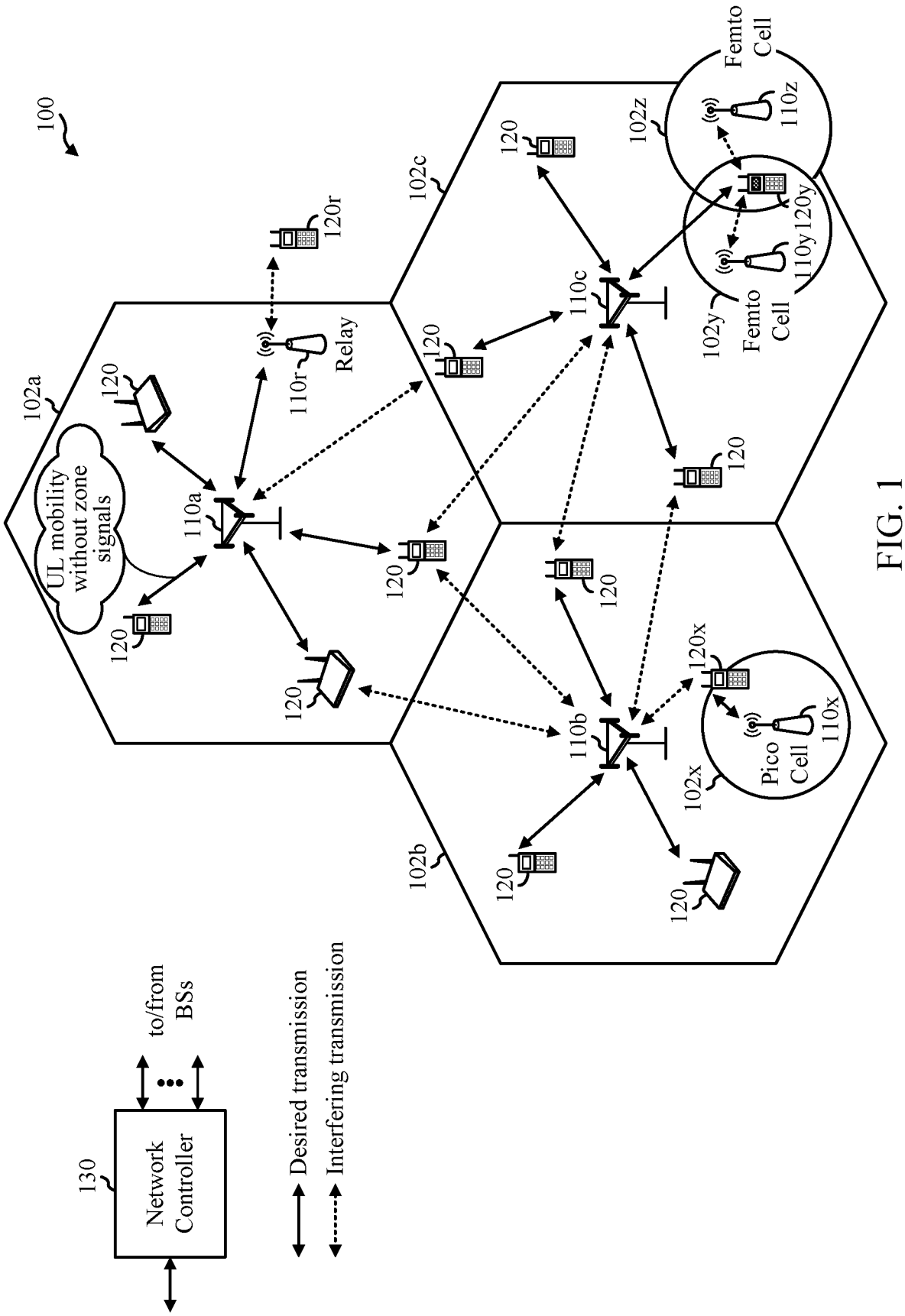
100
102a
102b
102c
102x
102y
102z
110a
110b
110c
110r
110x
110y
110z
120
120r
120x
120y
Relay
Pico Cell
Femto Cell
Femto Cell
UL mobility without zone signals
130
Network Controller
to/from BSs
Desired transmission
Interfering transmission

FIG. 1

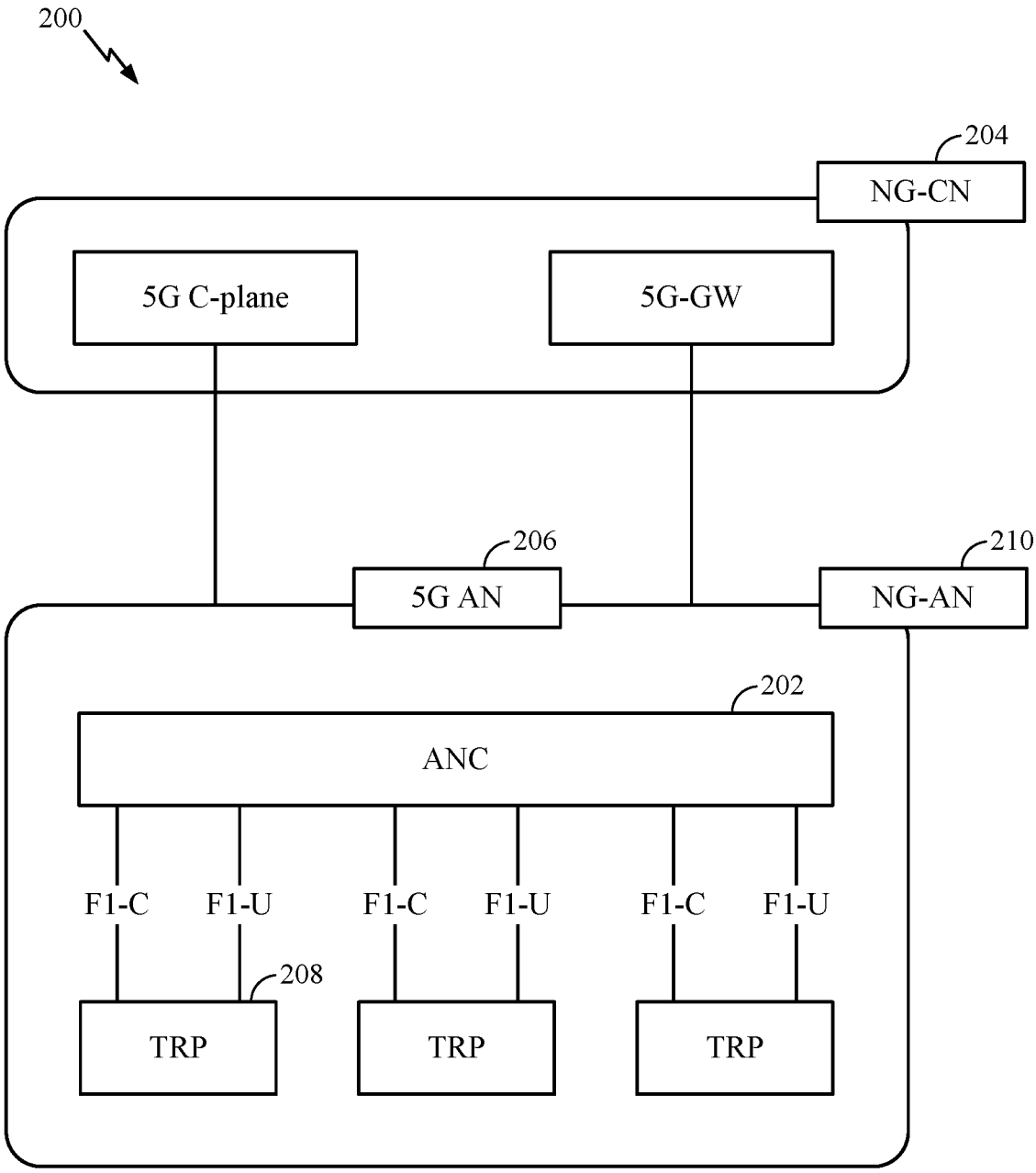
200
204
NG-CN
5G C-plane
5G-GW
206
5G AN
210
NG-AN
202
ANC
F1-C
F1-U
F1-C
F1-U
F1-C
F1-U
208
TRP
TRP
TRP

FIG. 2

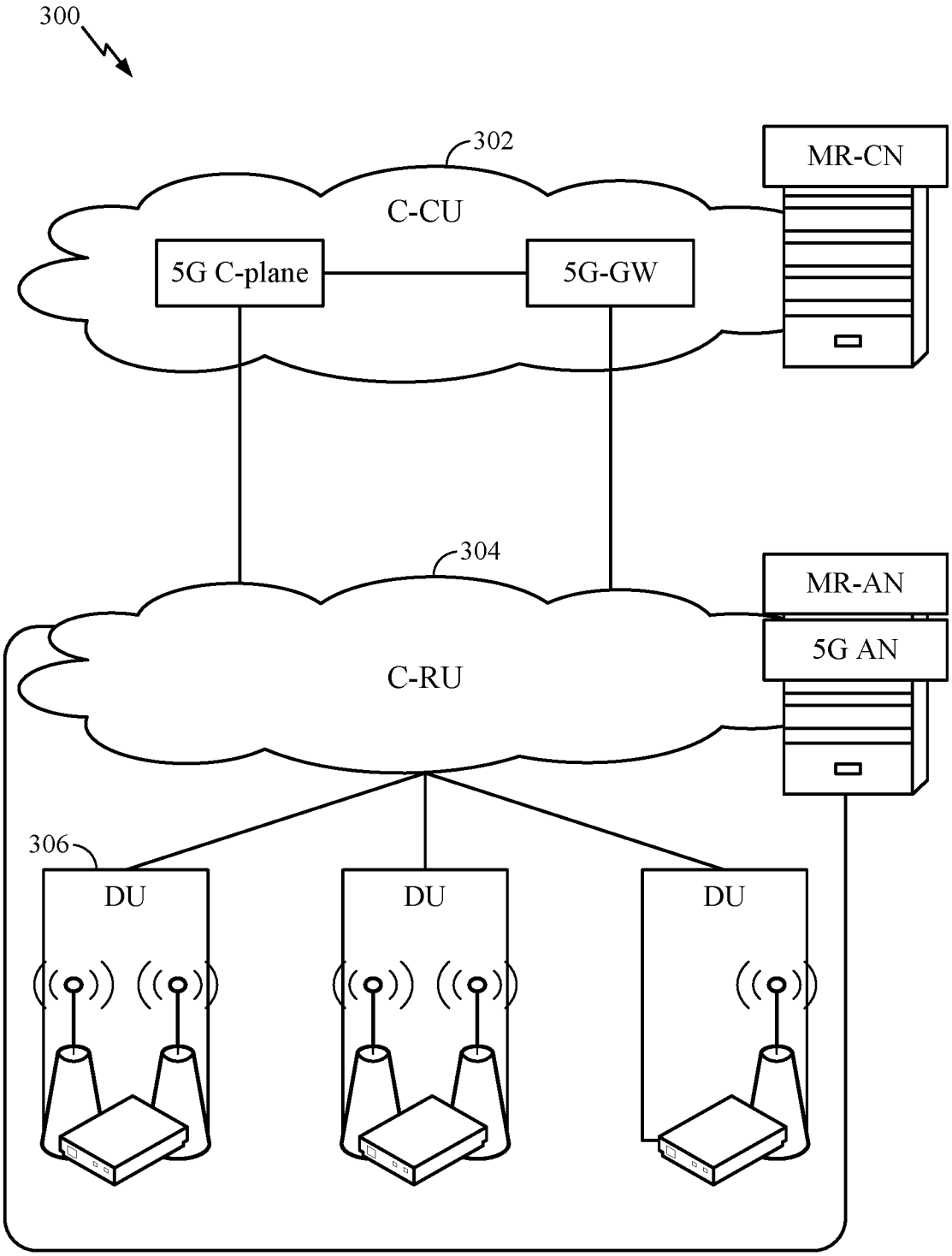

FIG. 3

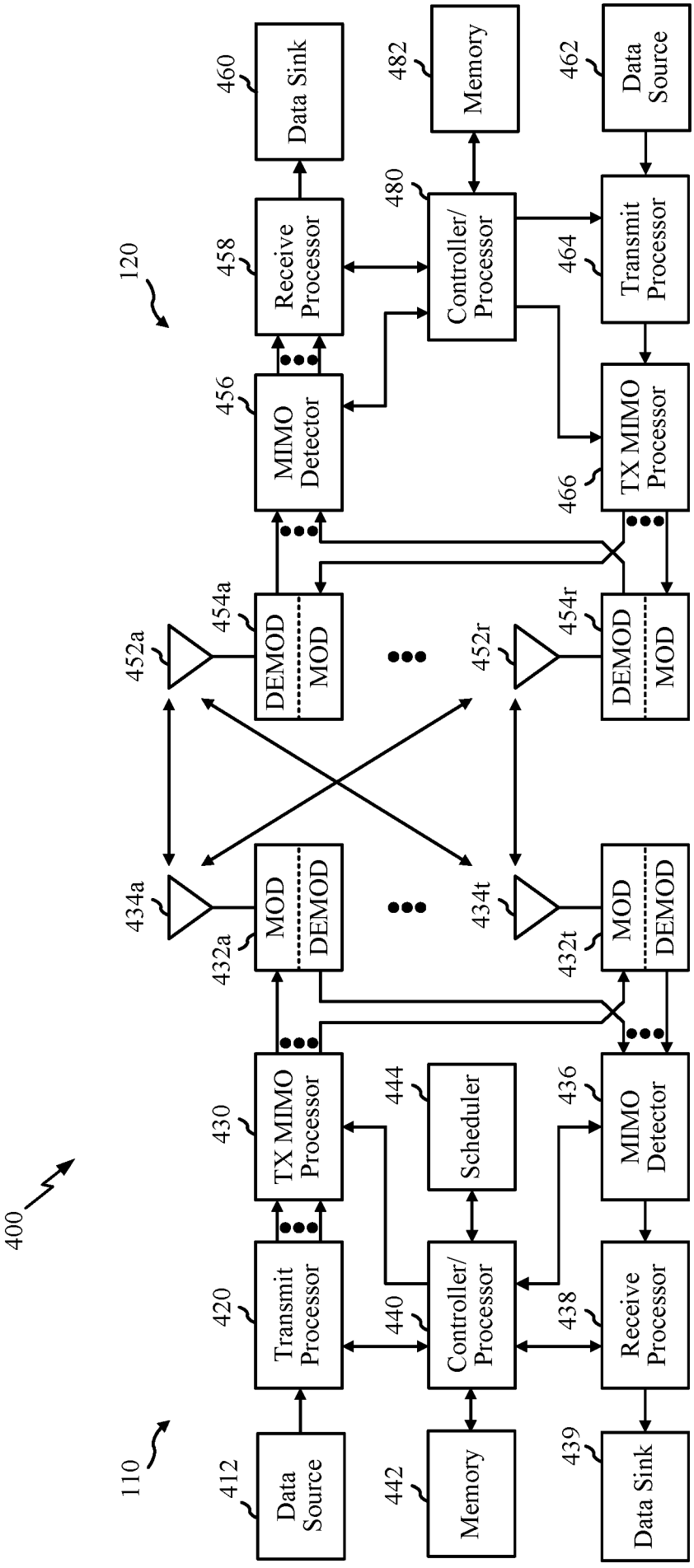
400
110
412
Data Source
420
Transmit Processor
430
TX MIMO Processor
432a
MOD
DEMOD
434a
452a
454a
DEMOD
MOD
456
MIMO Detector
458
Receive Processor
460
Data Sink
120
442
Memory
440
Controller/ Processor
444
Scheduler
436
MIMO Detector
438
Receive Processor
439
Data Sink
434t
432t
MOD
DEMOD
452r
454r
DEMOD
MOD
466
TX MIMO Processor
464
Transmit Processor
462
Data Source
480
Controller/ Processor
482
Memory

FIG. 4

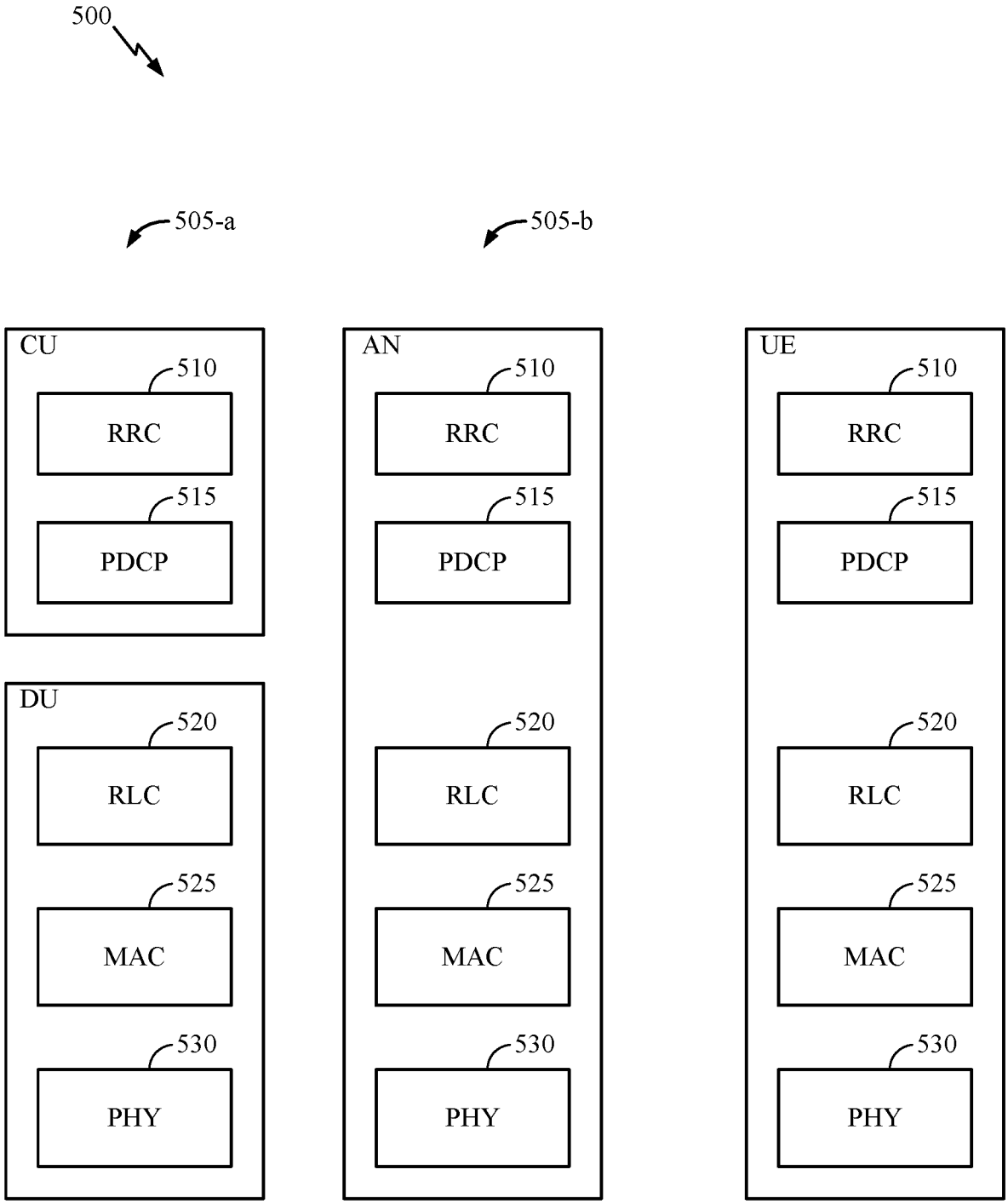
500
505-a
505-b
CU
510
RRC
515
PDCP
DU
520
RLC
525
MAC
530
PHY
AN
510
RRC
515
PDCP
520
RLC
525
MAC
530
PHY
UE
510
RRC
515
PDCP
520
RLC
525
MAC
530
PHY

FIG. 5

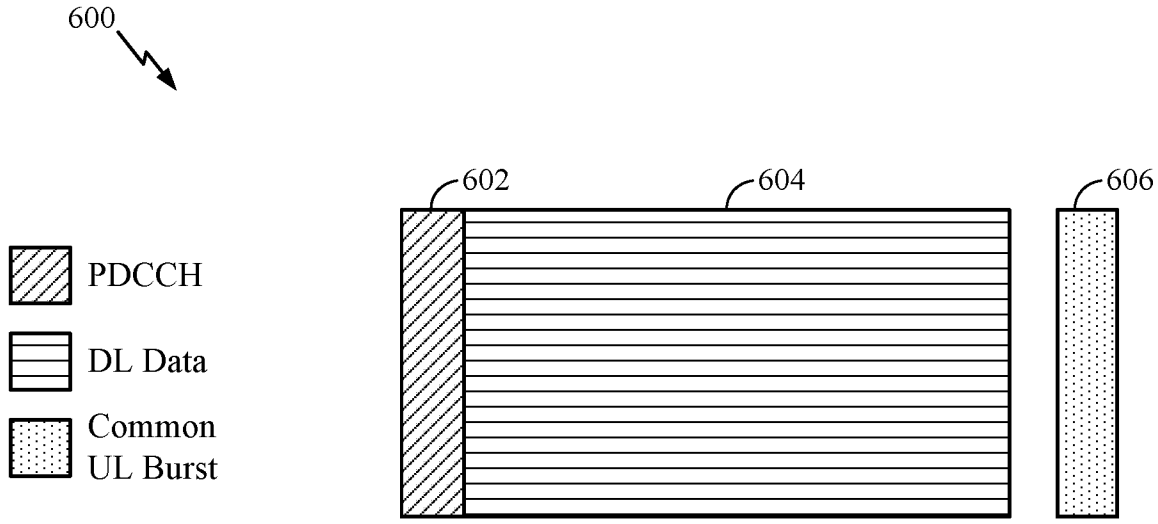
600
602
604
606
PDCCH
DL Data
Common
UL Burst

FIG. 6

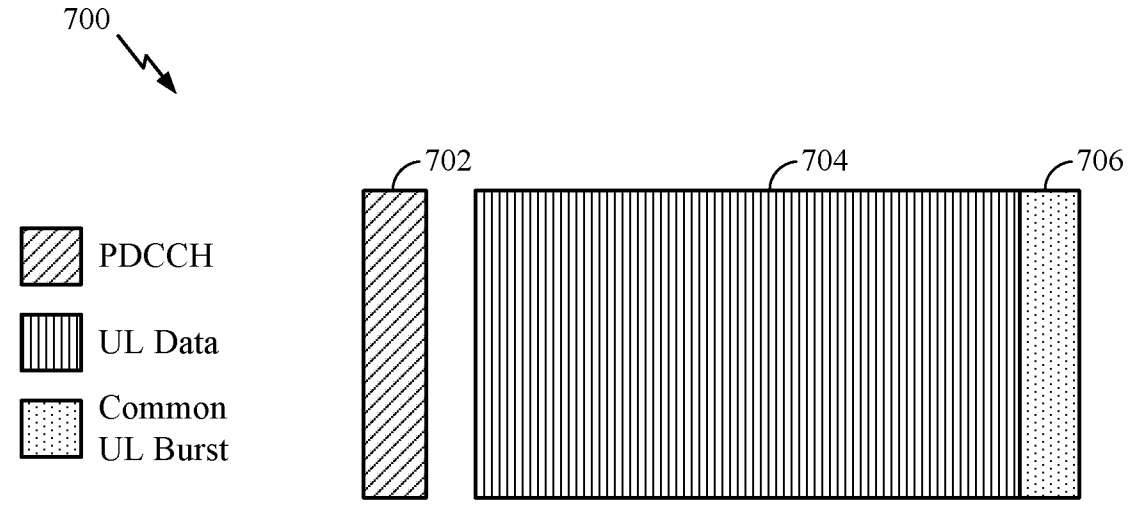
700
702
704
706
PDCCH
UL Data
Common
UL Burst

FIG. 7

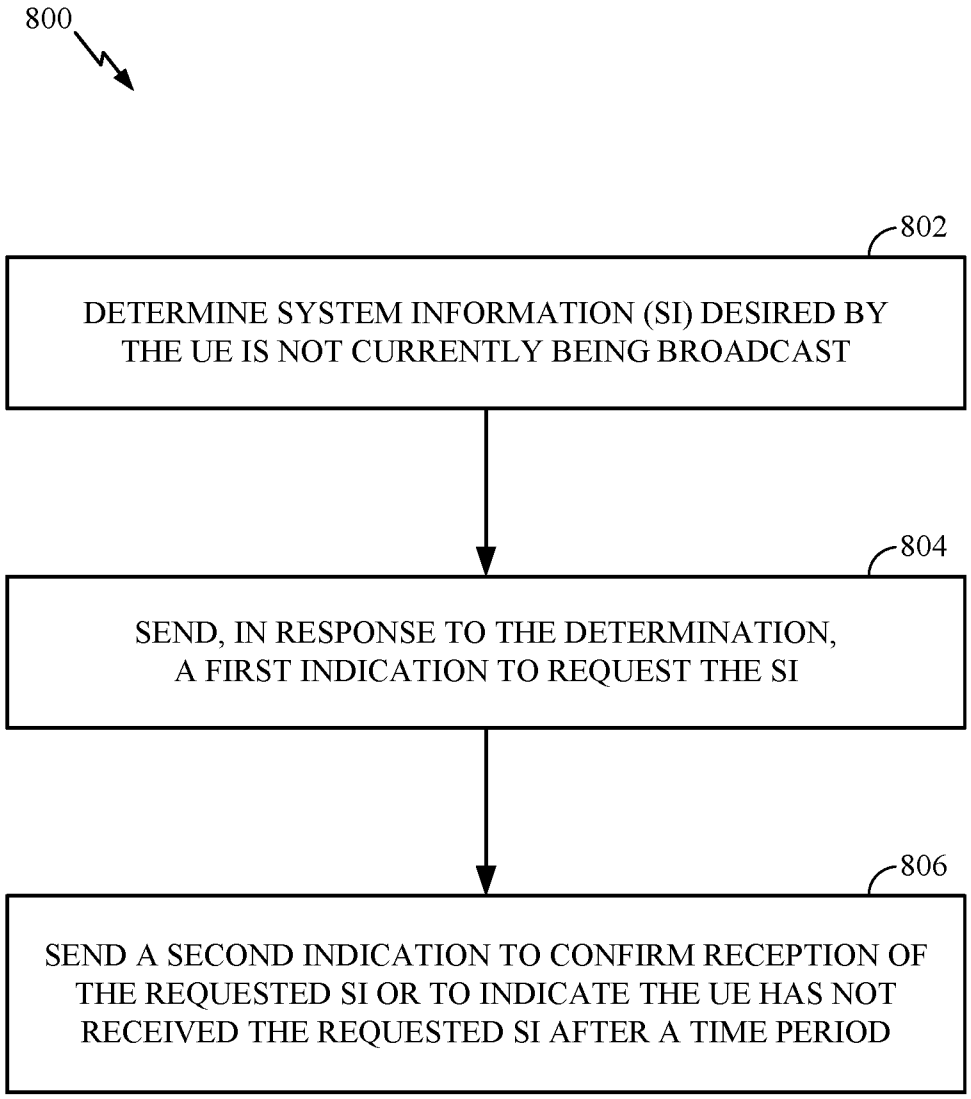
800
802
DETERMINE SYSTEM INFORMATION (SI) DESIRED BY THE UE IS NOT CURRENTLY BEING BROADCAST
804
SEND, IN RESPONSE TO THE DETERMINATION, A FIRST INDICATION TO REQUEST THE SI
806
SEND A SECOND INDICATION TO CONFIRM RECEPTION OF THE REQUESTED SI OR TO INDICATE THE UE HAS NOT RECEIVED THE REQUESTED SI AFTER A TIME PERIOD

FIG. 8

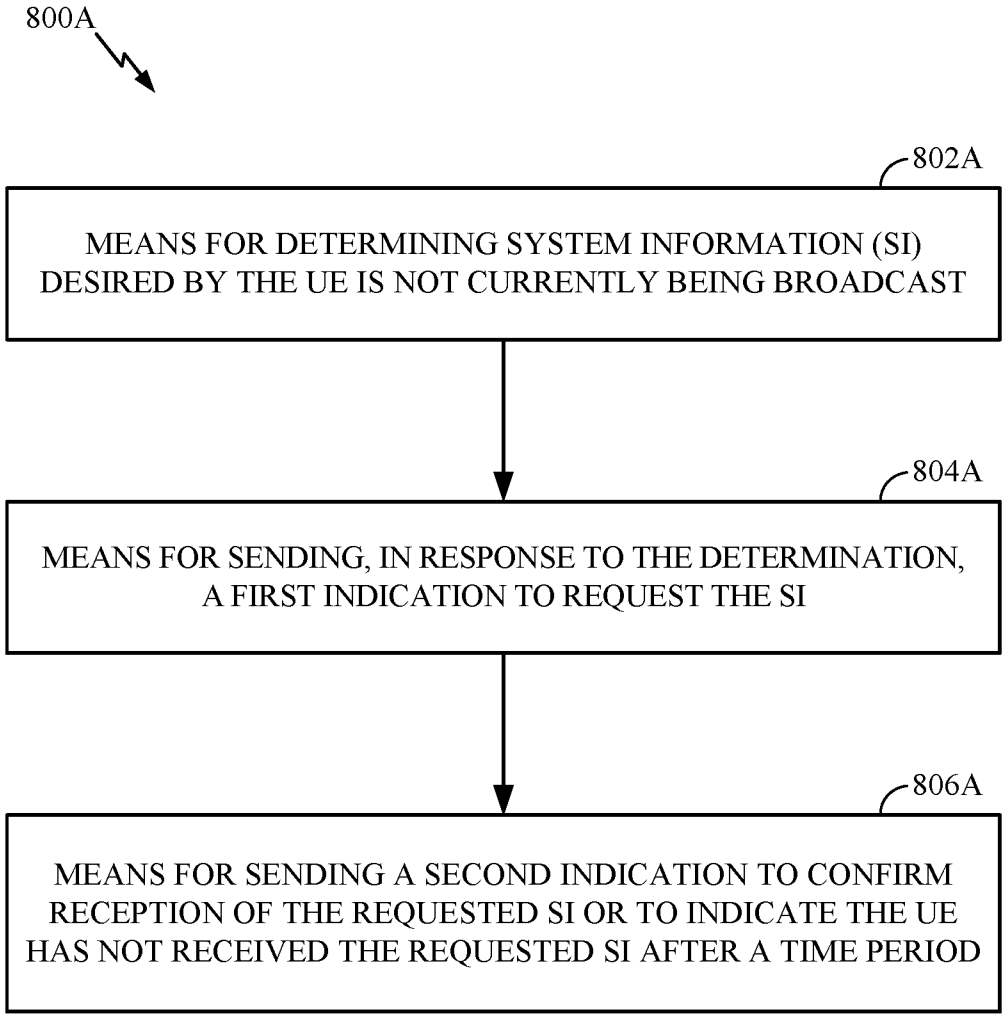
800A
802A
MEANS FOR DETERMINING SYSTEM INFORMATION (SI) DESIRED BY THE UE IS NOT CURRENTLY BEING BROADCAST
804A
MEANS FOR SENDING, IN RESPONSE TO THE DETERMINATION, A FIRST INDICATION TO REQUEST THE SI
806A
MEANS FOR SENDING A SECOND INDICATION TO CONFIRM RECEPTION OF THE REQUESTED SI OR TO INDICATE THE UE HAS NOT RECEIVED THE REQUESTED SI AFTER A TIME PERIOD

FIG. 8A

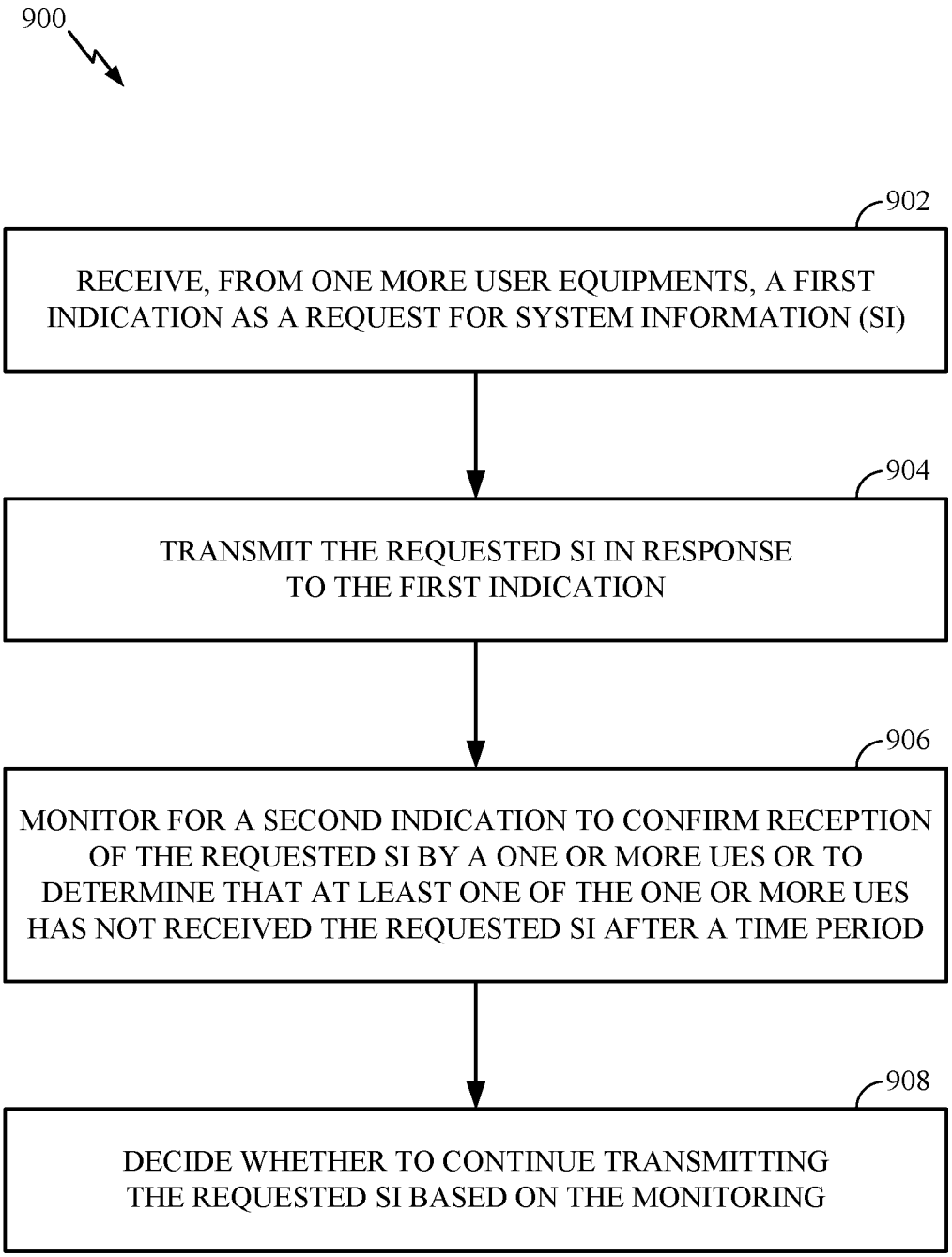
900
902
RECEIVE, FROM ONE MORE USER EQUIPMENTS, A FIRST INDICATION AS A REQUEST FOR SYSTEM INFORMATION (SI)
904
TRANSMIT THE REQUESTED SI IN RESPONSE TO THE FIRST INDICATION
906
MONITOR FOR A SECOND INDICATION TO CONFIRM RECEPTION OF THE REQUESTED SI BY A ONE OR MORE UES OR TO DETERMINE THAT AT LEAST ONE OF THE ONE OR MORE UES HAS NOT RECEIVED THE REQUESTED SI AFTER A TIME PERIOD
908
DECIDE WHETHER TO CONTINUE TRANSMITTING THE REQUESTED SI BASED ON THE MONITORING

FIG. 9

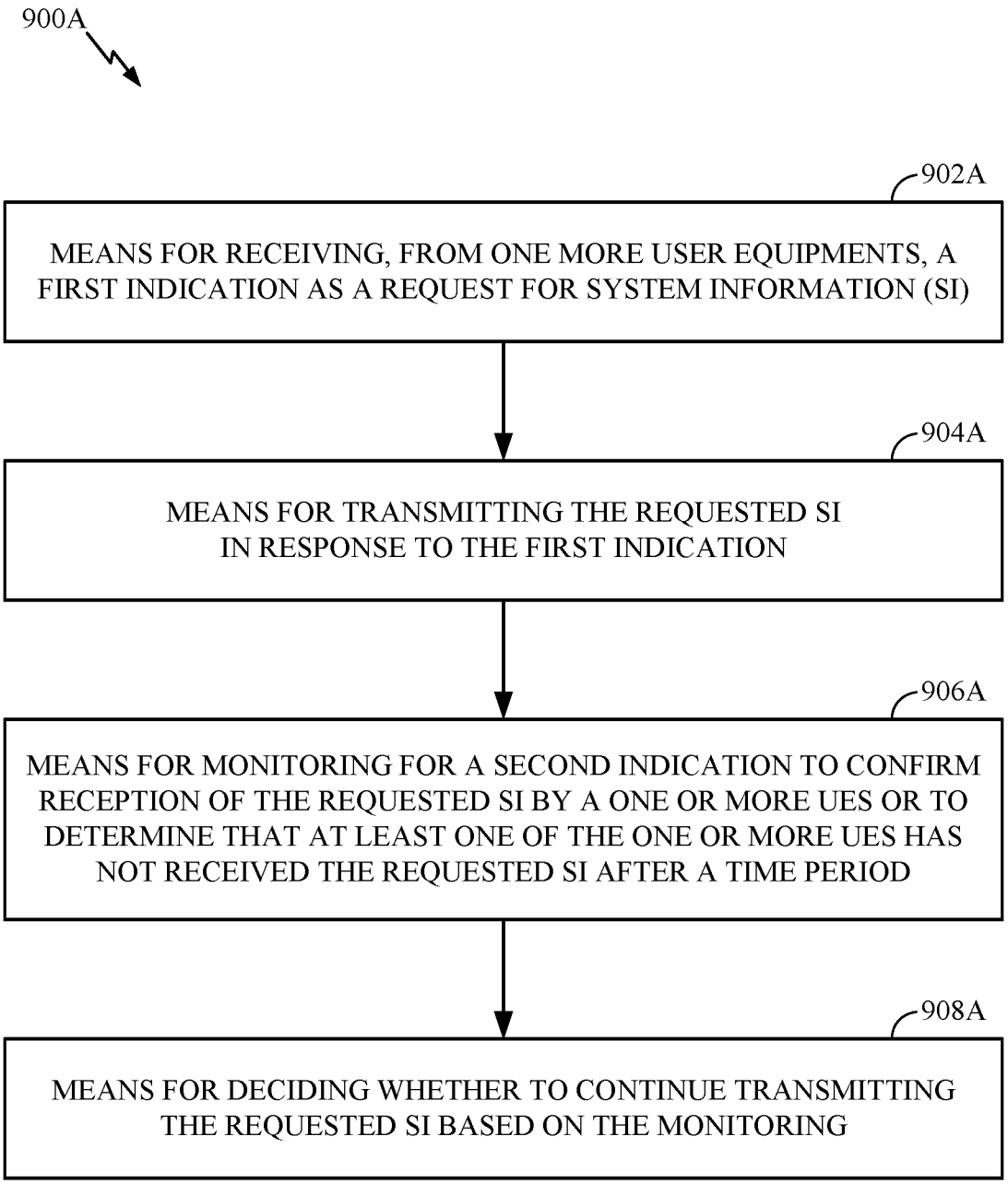
900A
902A
MEANS FOR RECEIVING, FROM ONE MORE USER EQUIPMENTS, A FIRST INDICATION AS A REQUEST FOR SYSTEM INFORMATION (SI)
904A
MEANS FOR TRANSMITTING THE REQUESTED SI IN RESPONSE TO THE FIRST INDICATION
906A
MEANS FOR MONITORING FOR A SECOND INDICATION TO CONFIRM RECEPTION OF THE REQUESTED SI BY A ONE OR MORE UES OR TO DETERMINE THAT AT LEAST ONE OF THE ONE OR MORE UES HAS NOT RECEIVED THE REQUESTED SI AFTER A TIME PERIOD
908A
MEANS FOR DECIDING WHETHER TO CONTINUE TRANSMITTING THE REQUESTED SI BASED ON THE MONITORING

FIG. 9A

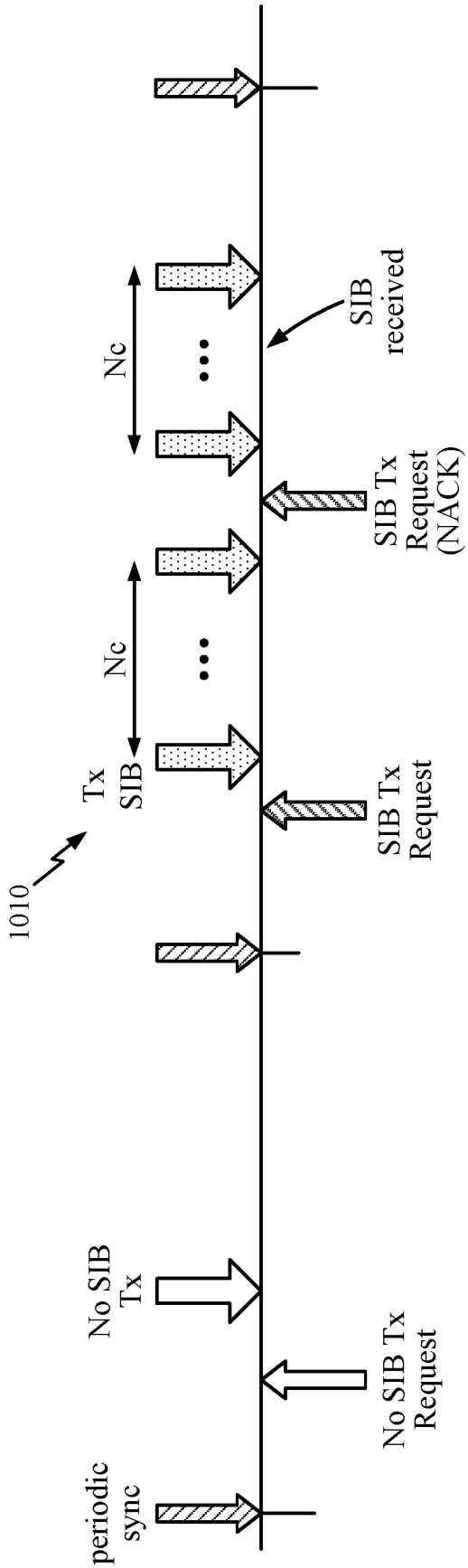
periodic sync
No SIB Tx
No SIB Tx Request
1010
Tx SIB
Nc
SIB Tx Request
Nc
SIB Tx Request (NACK)
SIB received

FIG. 10

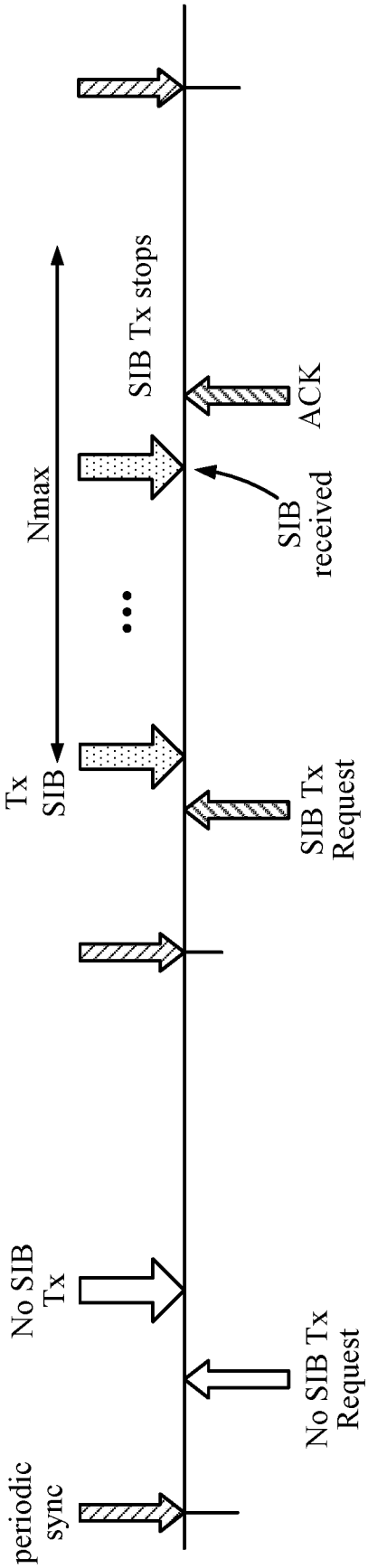
periodic sync
No SIB Tx
No SIB Tx Request
Tx SIB
Nmax
SIB Tx Request
SIB received
SIB Tx stops
ACK

FIG. 11