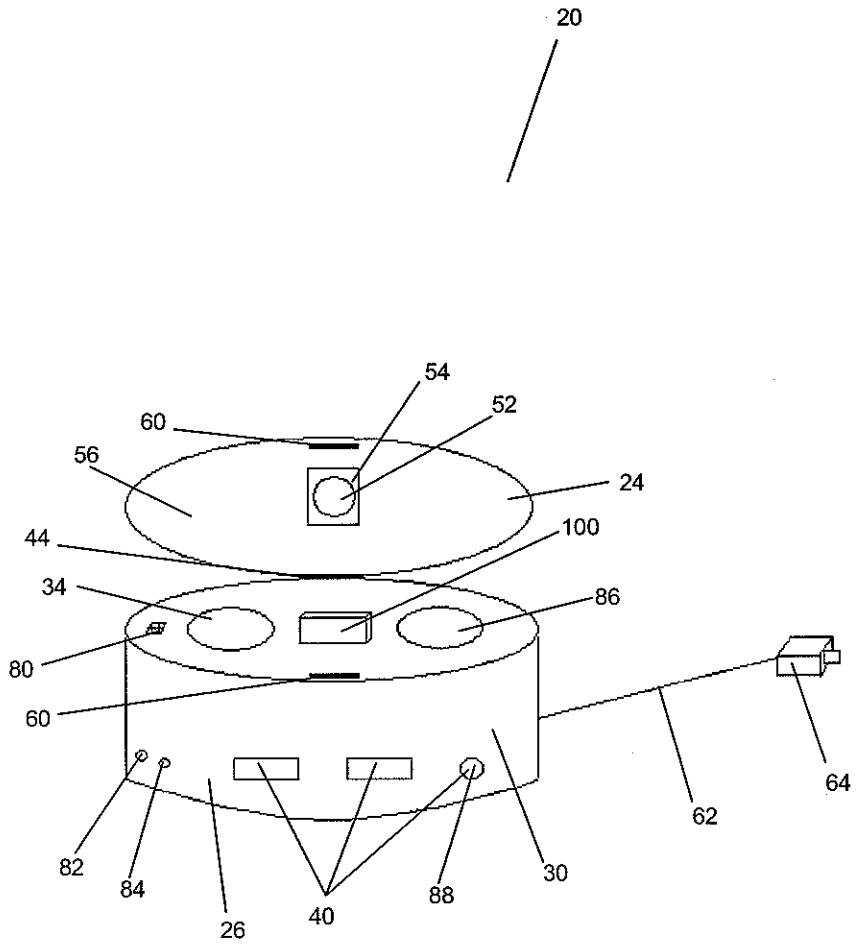

Figure 8

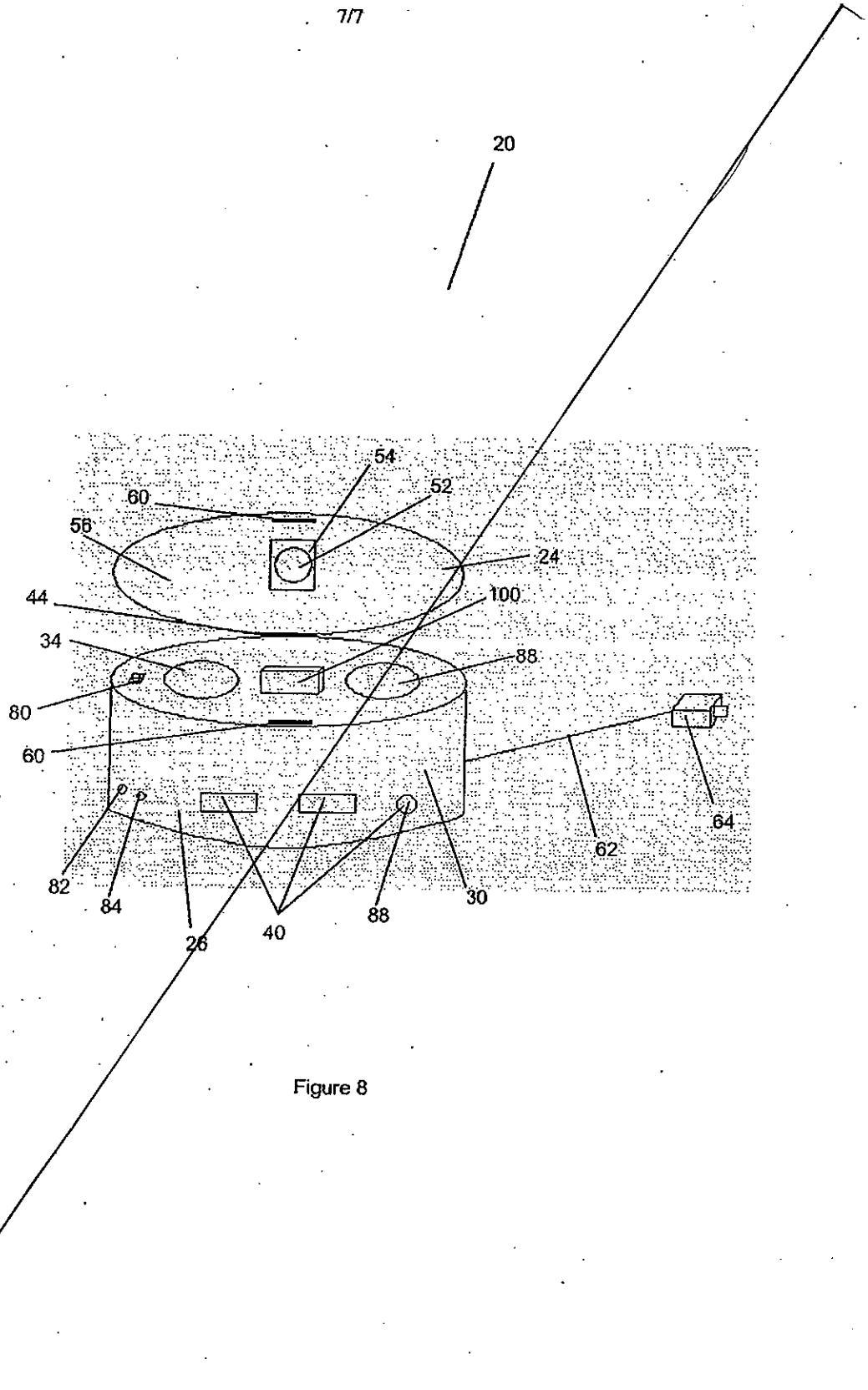

Figure 8