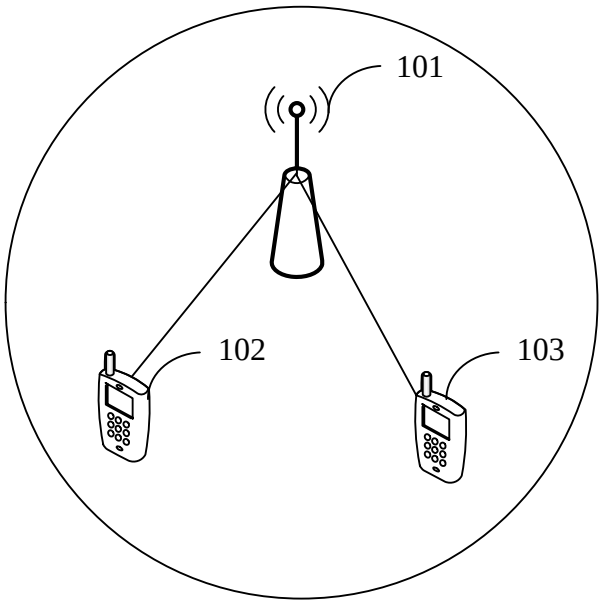

FIG. 1

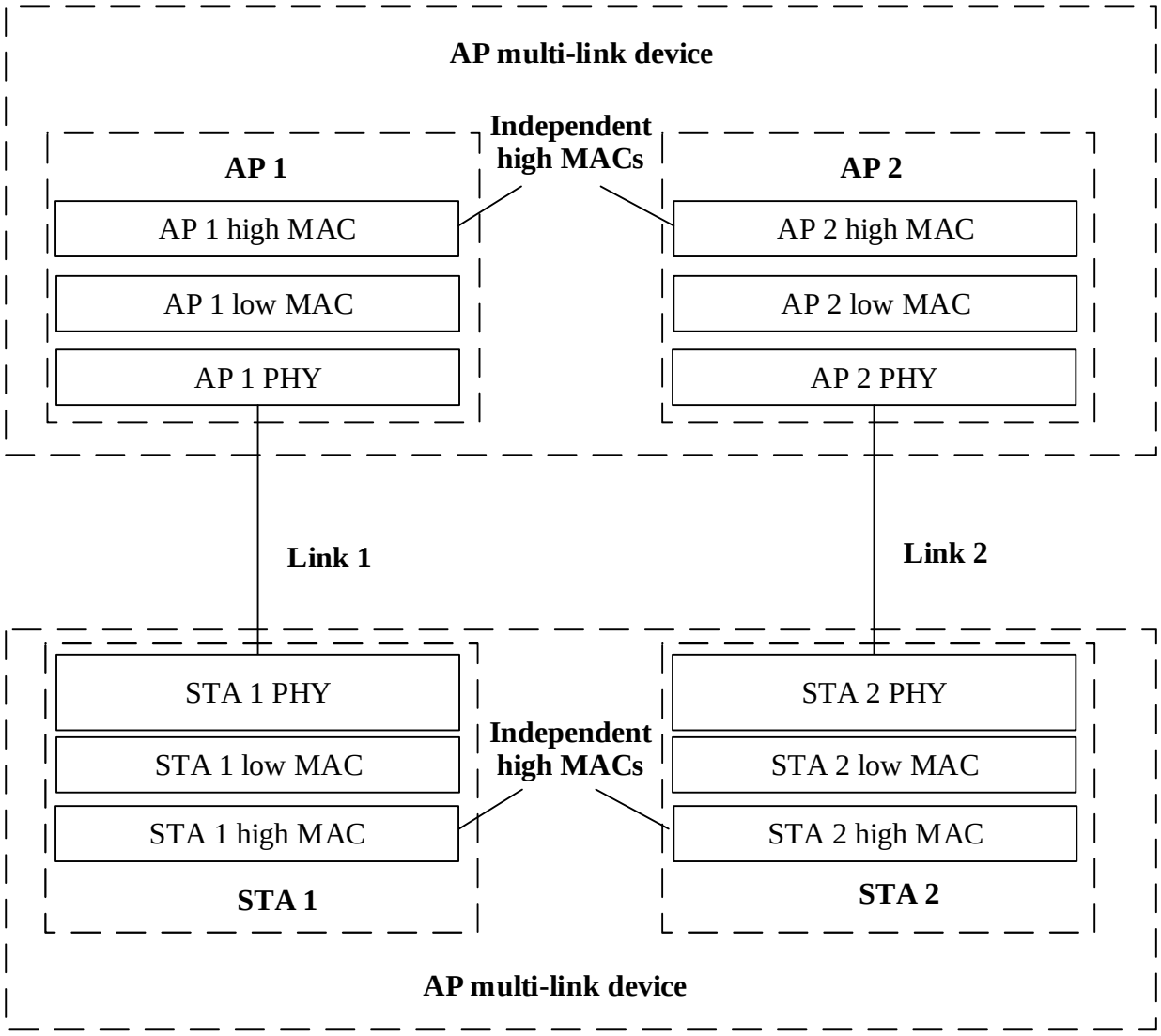
AP multi-link device
Independent high MACs
AP 1
AP 1 high MAC
AP 1 low MAC
AP 1 PHY
AP 2
AP 2 high MAC
AP 2 low MAC
AP 2 PHY
Link 1
Link 2
STA 1 PHY
STA 1 low MAC
STA 1 high MAC
STA 1
Independent high MACs
STA 2 PHY
STA 2 low MAC
STA 2 high MAC
STA 2
AP multi-link device

FIG. 2(a)

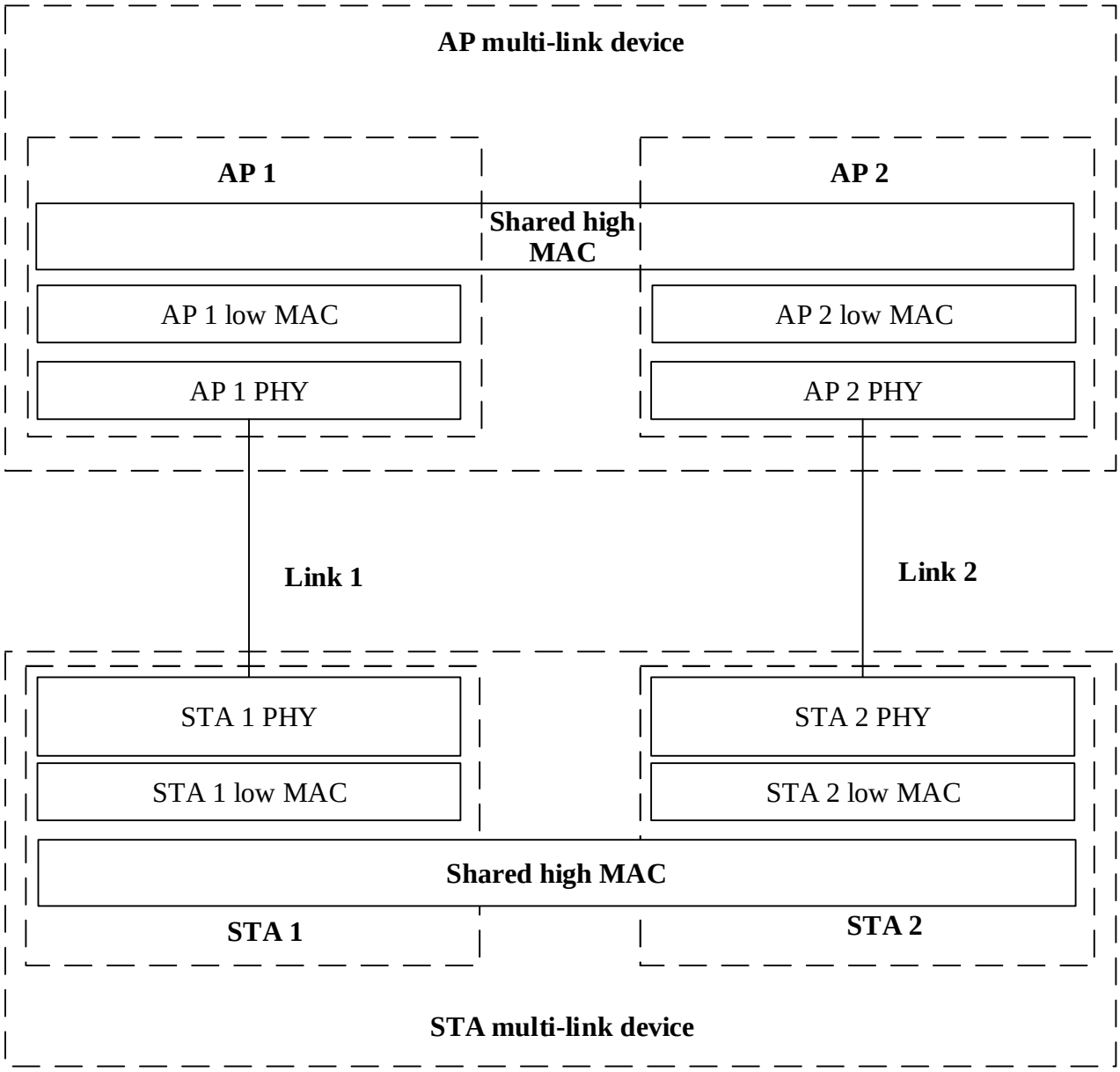
AP multi-link device
AP 1
AP 2
Shared high MAC
AP 1 low MAC
AP 2 low MAC
AP 1 PHY
AP 2 PHY
Link 1
Link 2
STA 1 PHY
STA 2 PHY
STA 1 low MAC
STA 2 low MAC
Shared high MAC
STA 1
STA 2
STA multi-link device

FIG. 2(b)

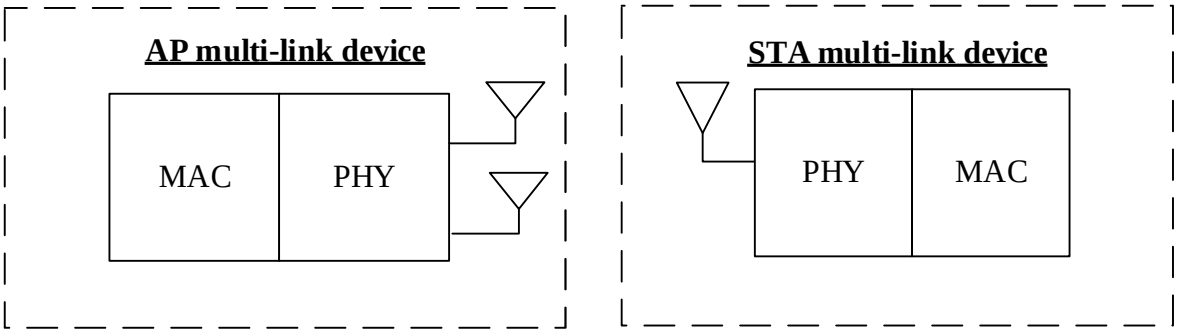
AP multi-link device
MAC
PHY
STA multi-link device
PHY
MAC

FIG. 2(c)

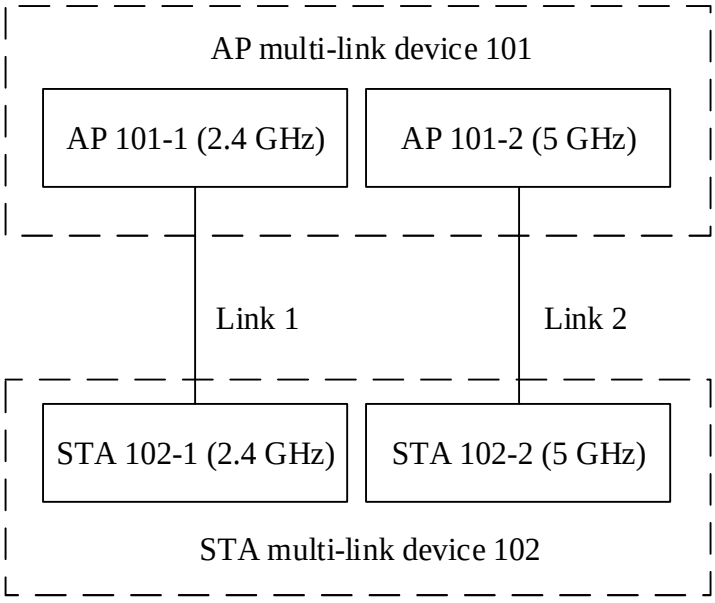
AP multi-link device 101
AP 101-1 (2.4 GHz)
AP 101-2 (5 GHz)
Link 1
Link 2
STA 102-1 (2.4 GHz)
STA 102-2 (5 GHz)
STA multi-link device 102

FIG. 3(a)

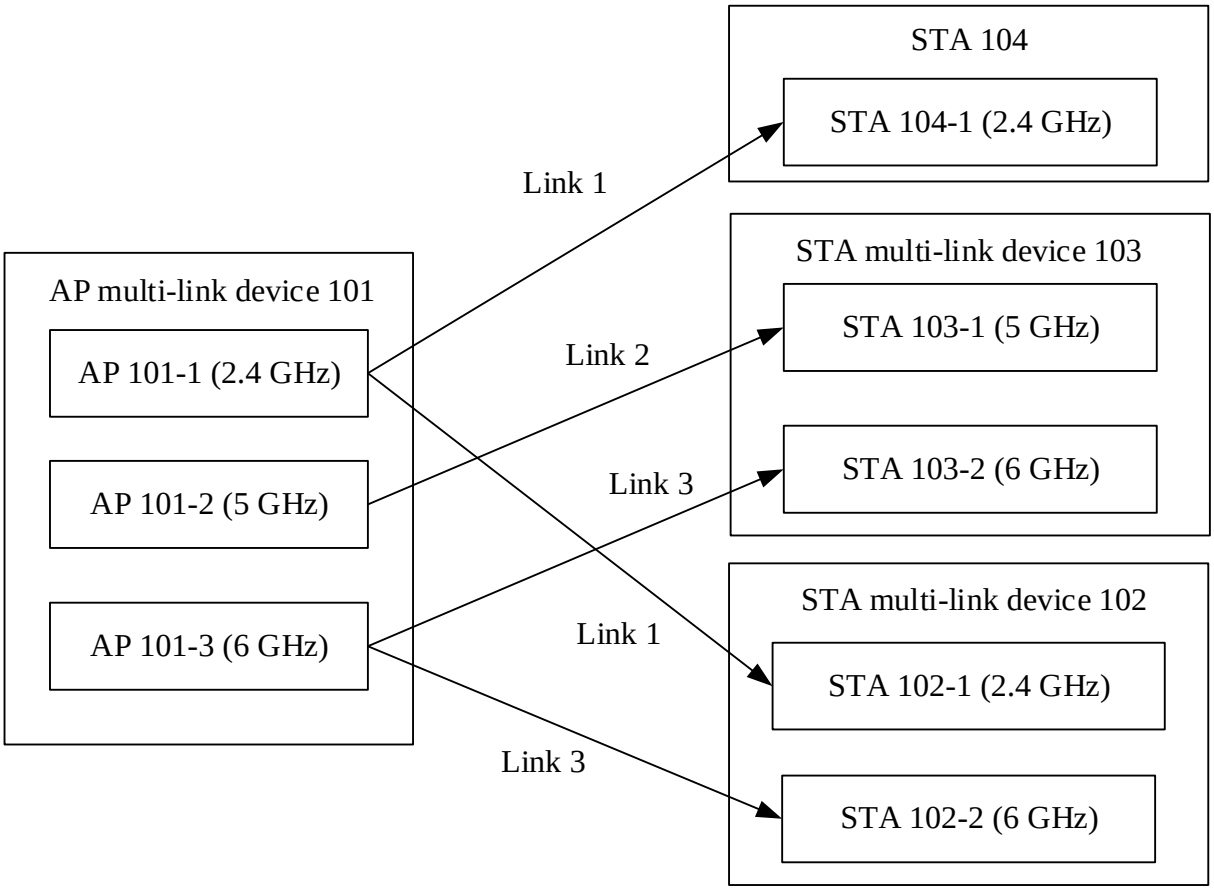
STA 104
STA 104-1 (2.4 GHz)
Link 1
STA multi-link device 103
AP multi-link device 101
STA 103-1 (5 GHz)
AP 101-1 (2.4 GHz)
Link 2
AP 101-2 (5 GHz)
Link 3
STA 103-2 (6 GHz)
STA multi-link device 102
AP 101-3 (6 GHz)
Link 1
STA 102-1 (2.4 GHz)
Link 3
STA 102-2 (6 GHz)

FIG. 3(b)

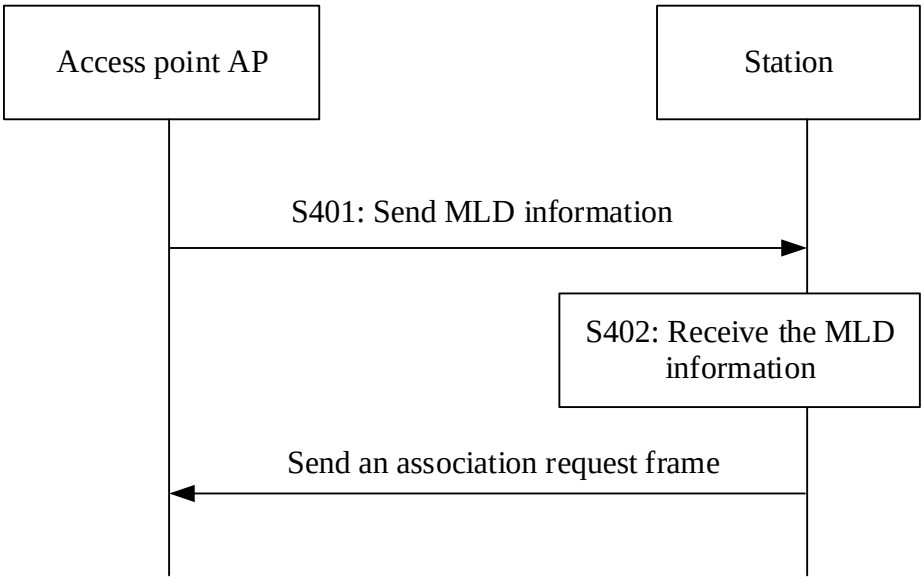
Access point AP
Station
S401: Send MLD information
S402: Receive the MLD information
Send an association request frame

FIG. 4

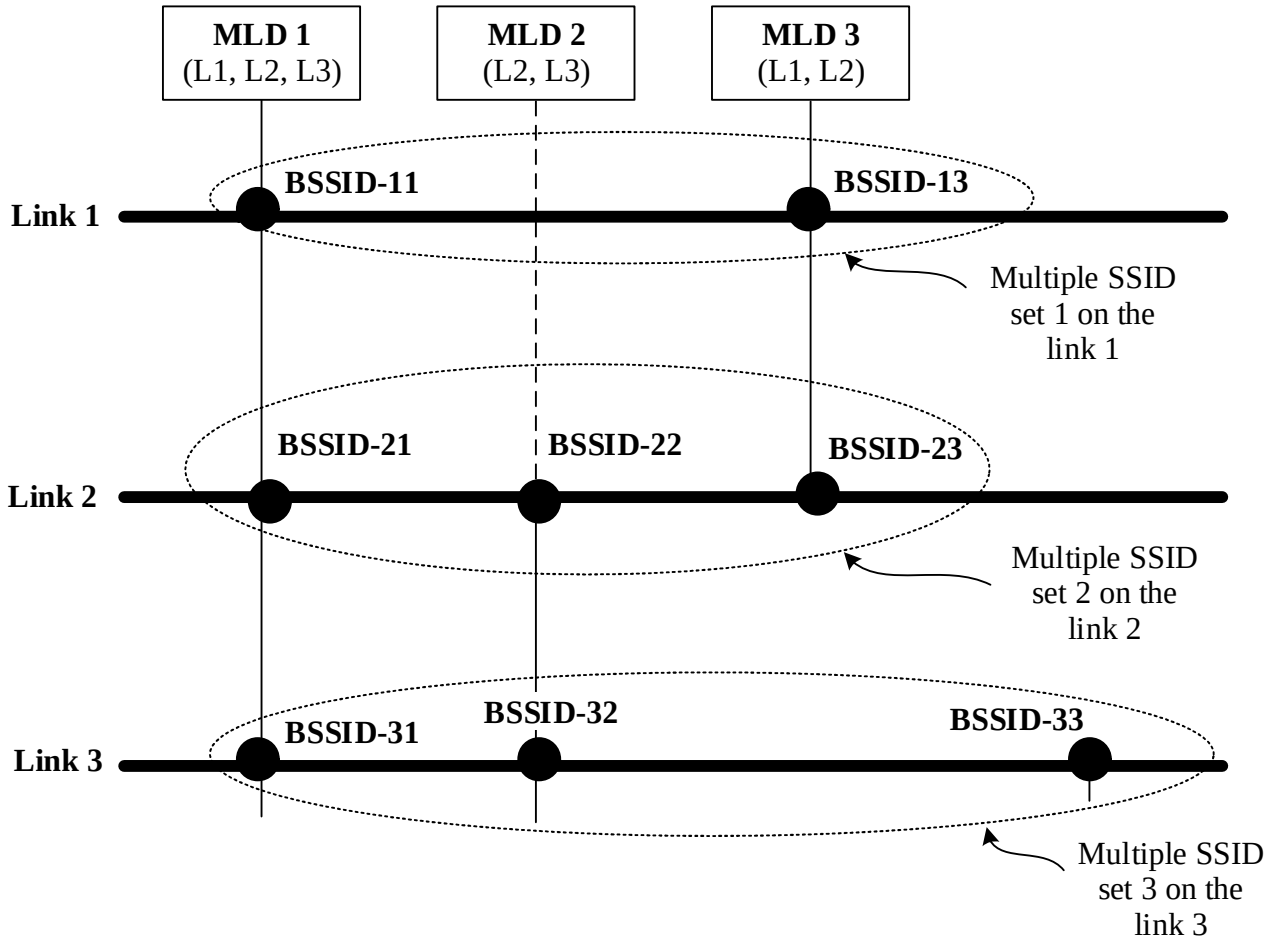
MLD 1
(L1, L2, L3)
MLD 2
(L2, L3)
MLD 3
(L1, L2)
Link 1
BSSID-11
BSSID-13
Multiple SSID set 1 on the link 1
Link 2
BSSID-21
BSSID-22
BSSID-23
Multiple SSID set 2 on the link 2
Link 3
BSSID-31
BSSID-32
BSSID-33
Multiple SSID set 3 on the link 3

FIG. 5

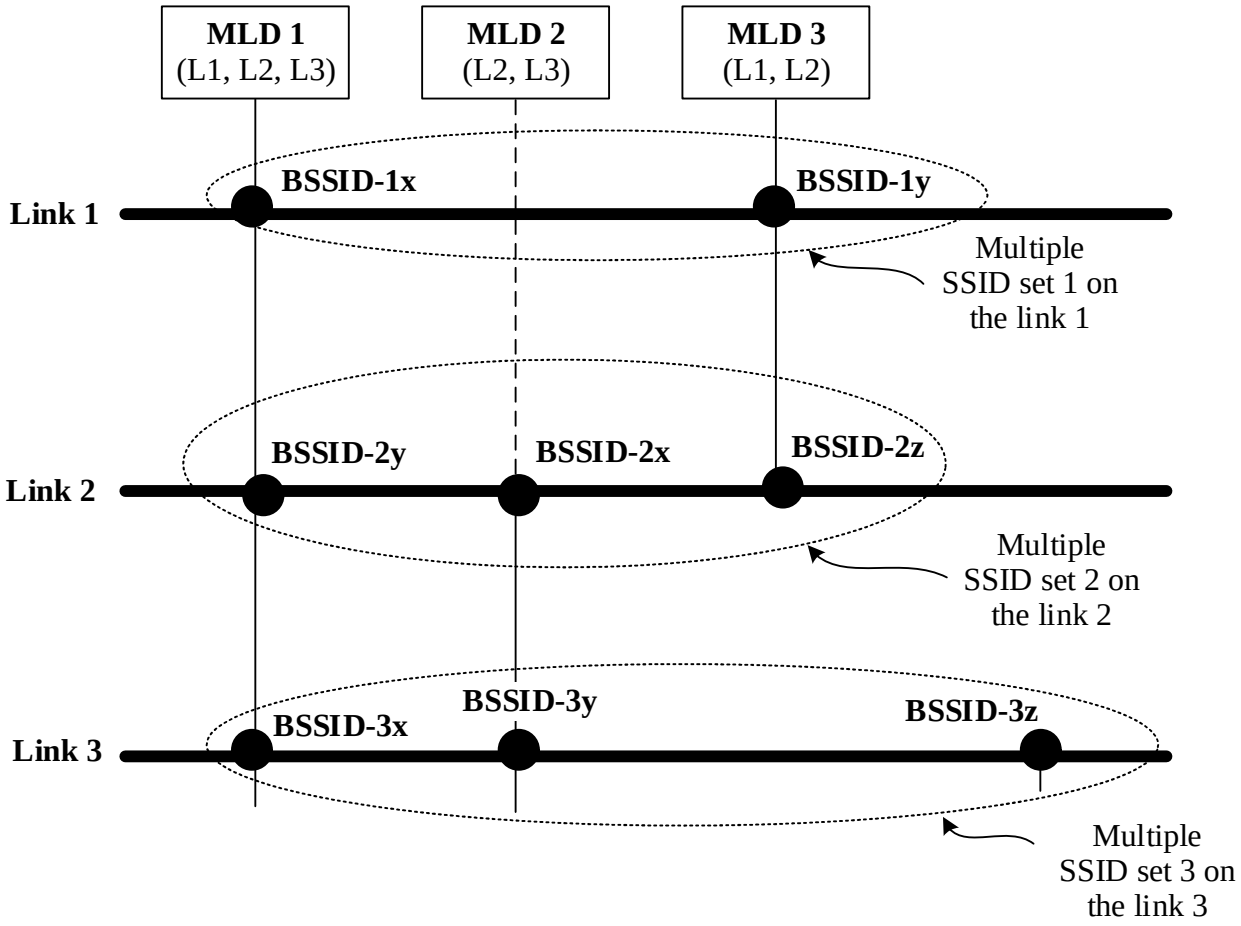
MLD 1
(L1, L2, L3)
MLD 2
(L2, L3)
MLD 3
(L1, L2)
Link 1
BSSID-1x
BSSID-1y
Multiple
SSID set 1 on
the link 1
Link 2
BSSID-2y
BSSID-2x
BSSID-2z
Multiple
SSID set 2 on
the link 2
Link 3
BSSID-3x
BSSID-3y
BSSID-3z
Multiple
SSID set 3 on
the link 3

FIG. 6

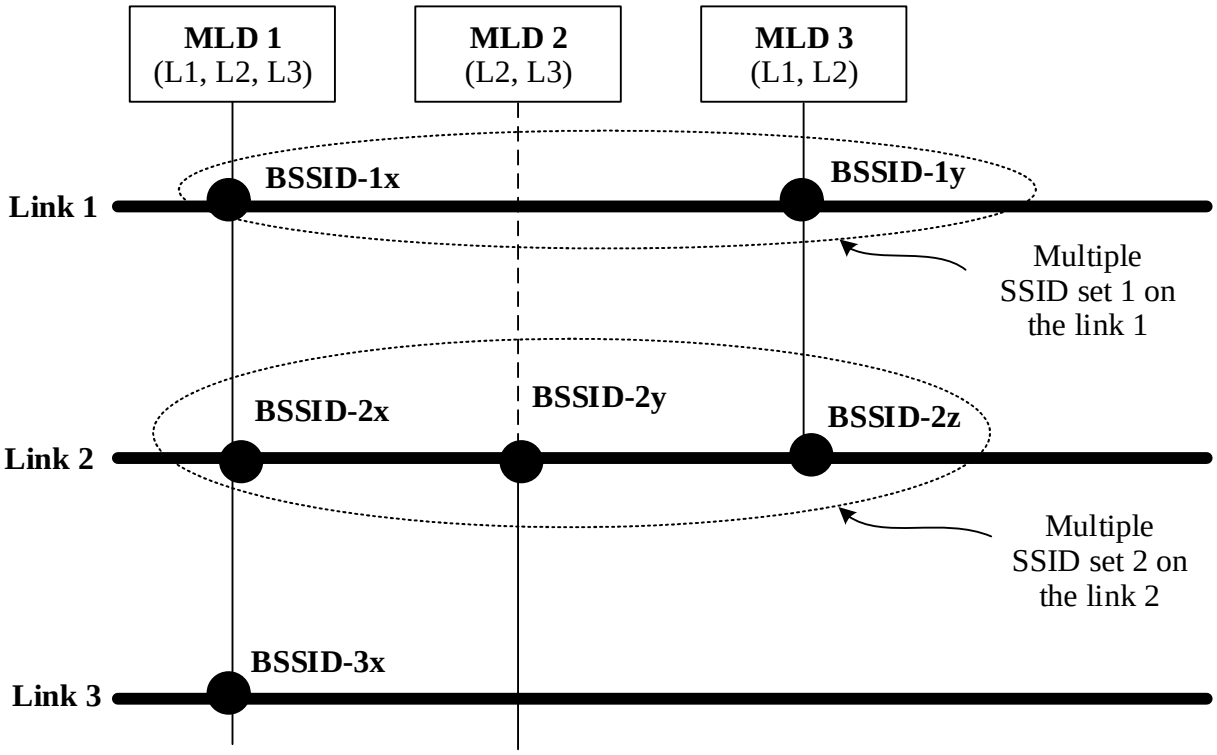
MLD 1
(L1, L2, L3)
MLD 2
(L2, L3)
MLD 3
(L1, L2)
Link 1
BSSID-1x
BSSID-1y
Multiple
SSID set 1 on
the link 1
Link 2
BSSID-2x
BSSID-2y
BSSID-2z
Multiple
SSID set 2 on
the link 2
Link 3
BSSID-3x

FIG. 7

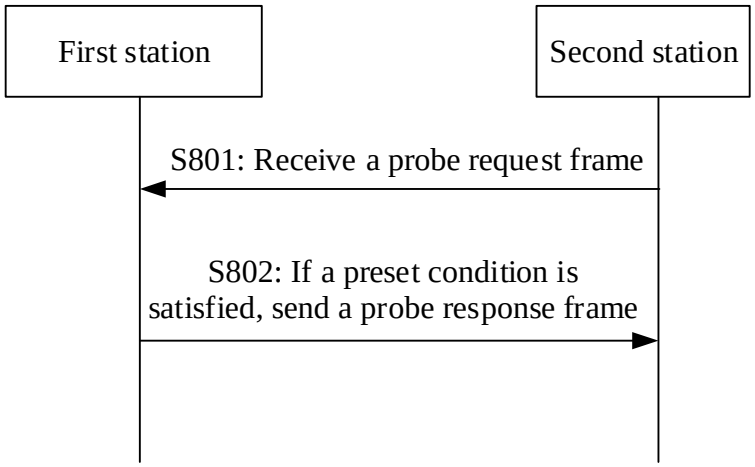
First station
Second station
S801: Receive a probe request frame
S802: If a preset condition is
satisfied, send a probe response frame

FIG. 8

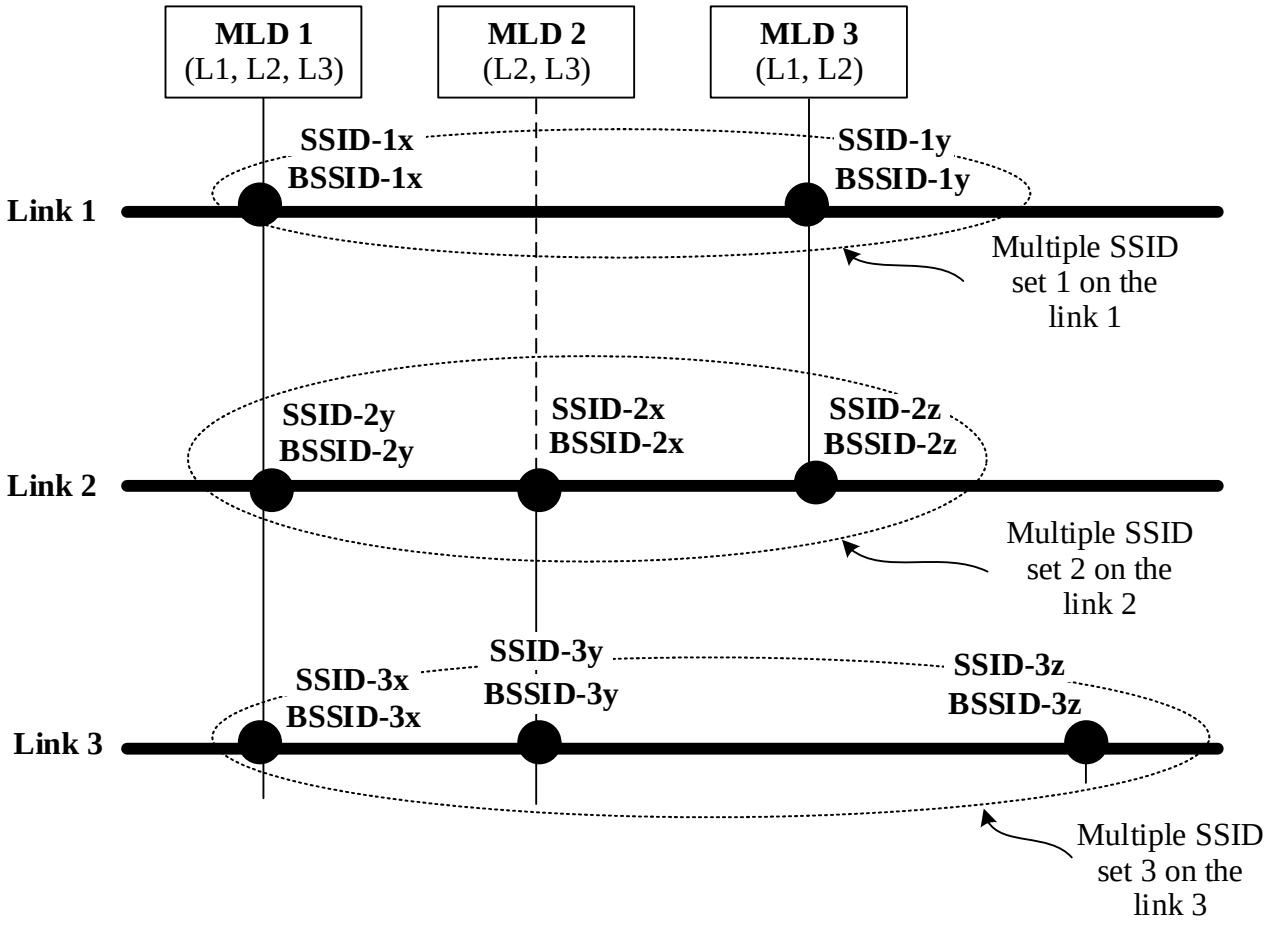
MLD 1
(L1, L2, L3)
MLD 2
(L2, L3)
MLD 3
(L1, L2)
SSID-1x
BSSID-1x
SSID-1y
BSSID-1y
Link 1
Multiple SSID set 1 on the link 1
SSID-2y
BSSID-2y
SSID-2x
BSSID-2x
SSID-2z
BSSID-2z
Link 2
Multiple SSID set 2 on the link 2
SSID-3y
BSSID-3y
SSID-3x
BSSID-3x
SSID-3z
BSSID-3z
Link 3
Multiple SSID set 3 on the link 3

FIG. 9

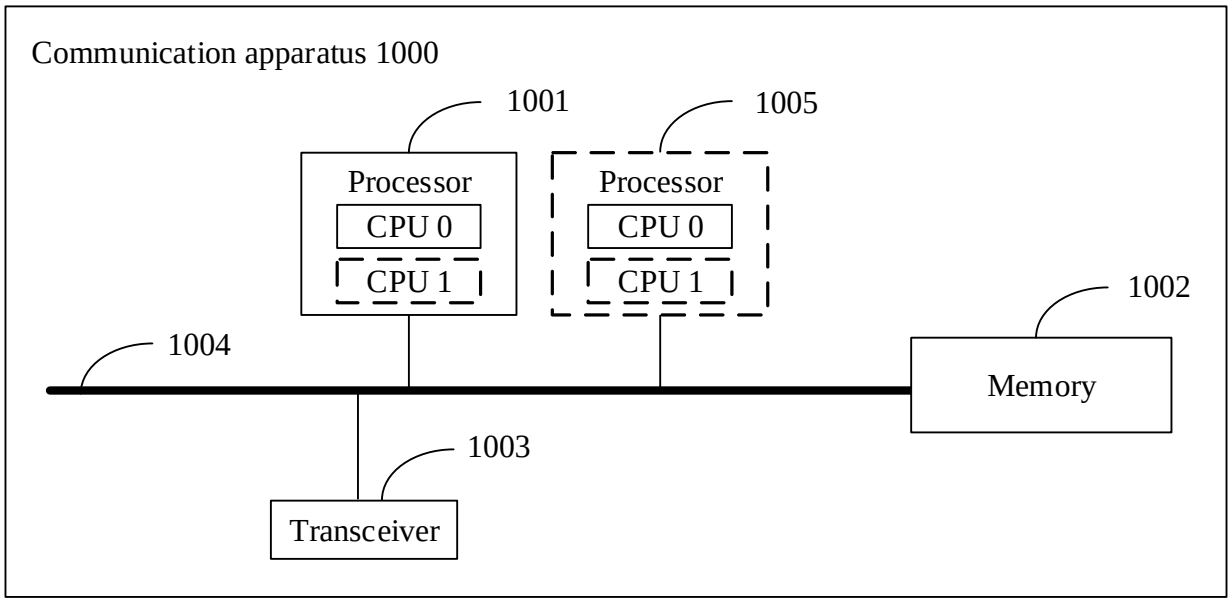
Communication apparatus 1000
1001
1005
Processor
CPU 0
CPU 1
Processor
CPU 0
CPU 1
1002
1004
Memory
1003
Transceiver

FIG. 10

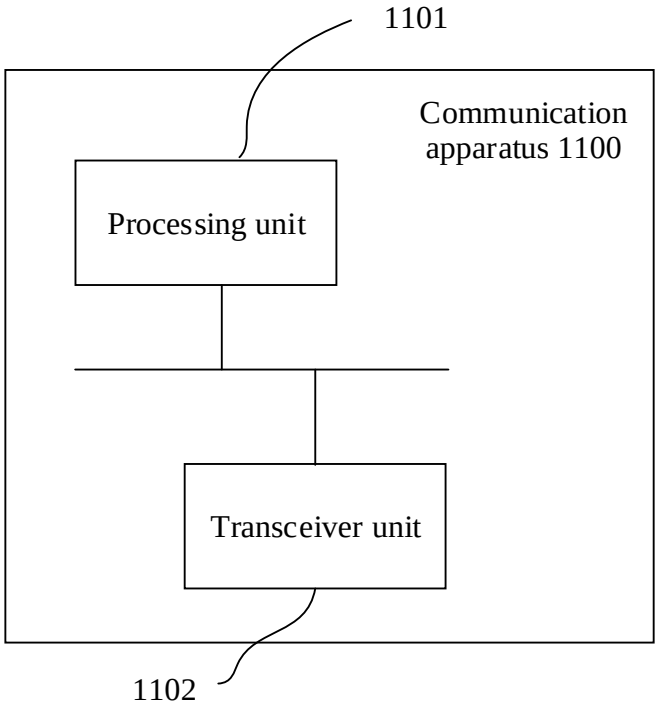
1101
Communication apparatus 1100
Processing unit
Transceiver unit
1102

FIG. 11