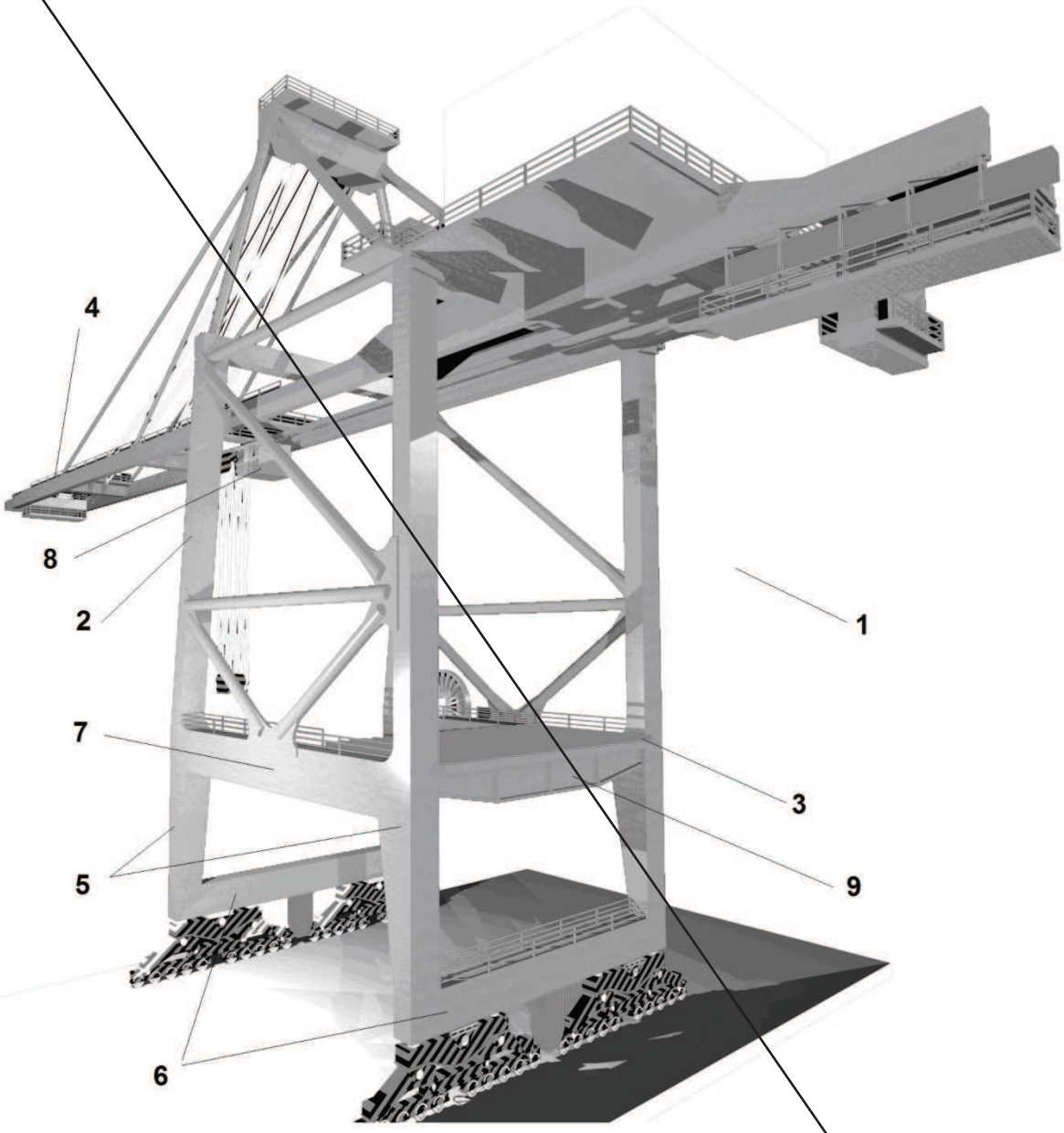


Figure 1

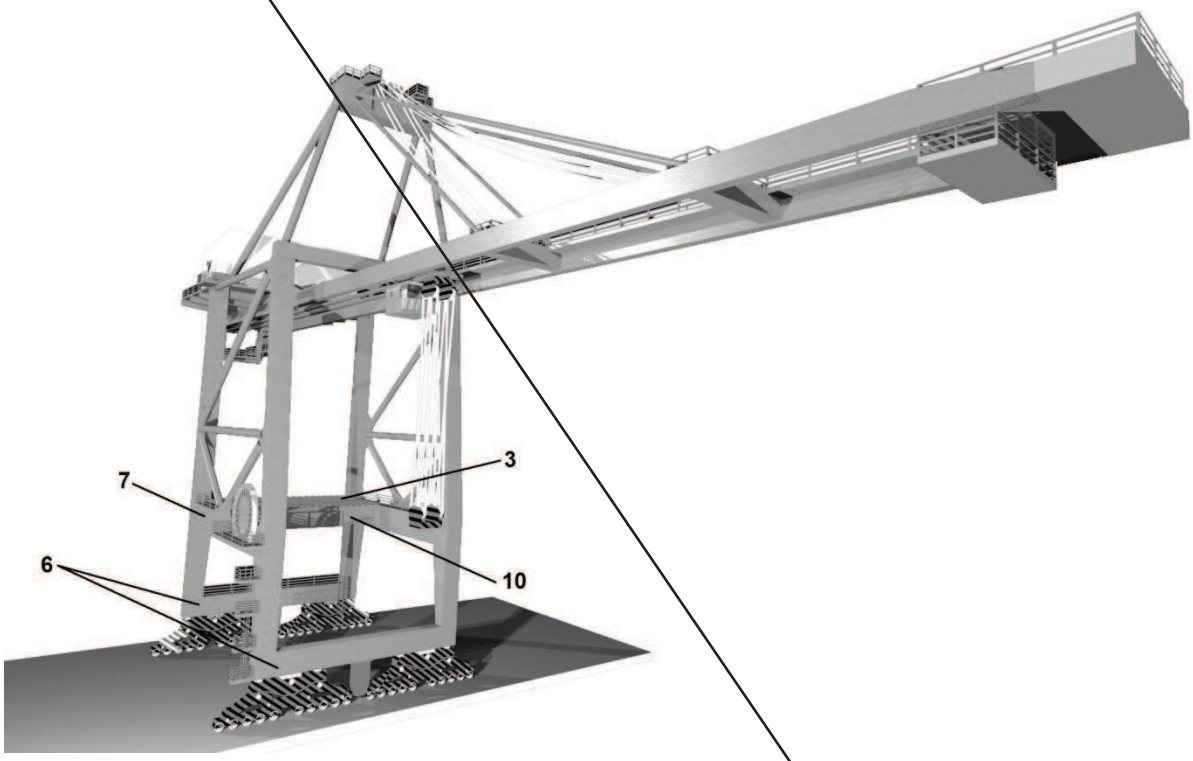


Figure 2

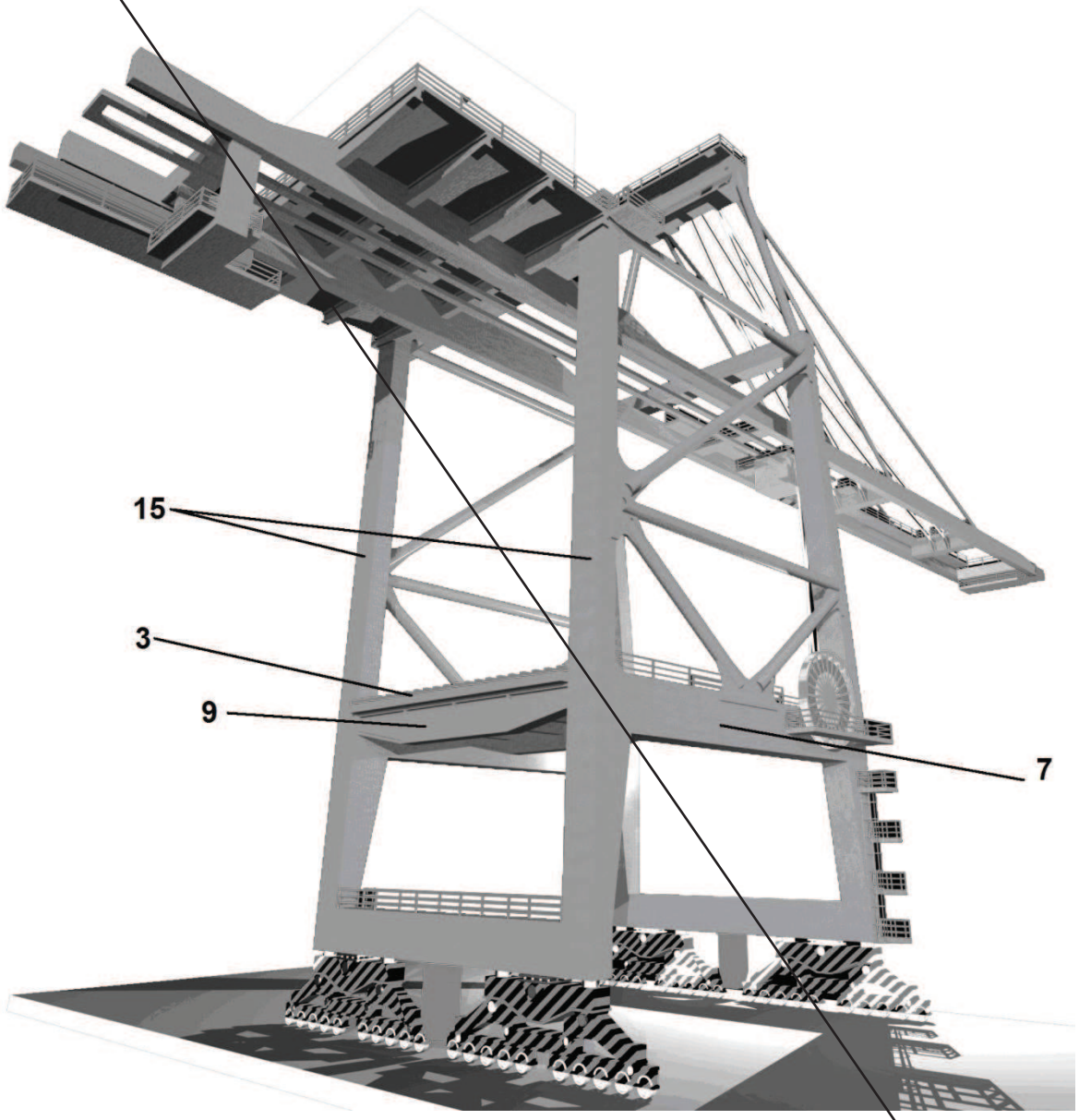


Figure 3

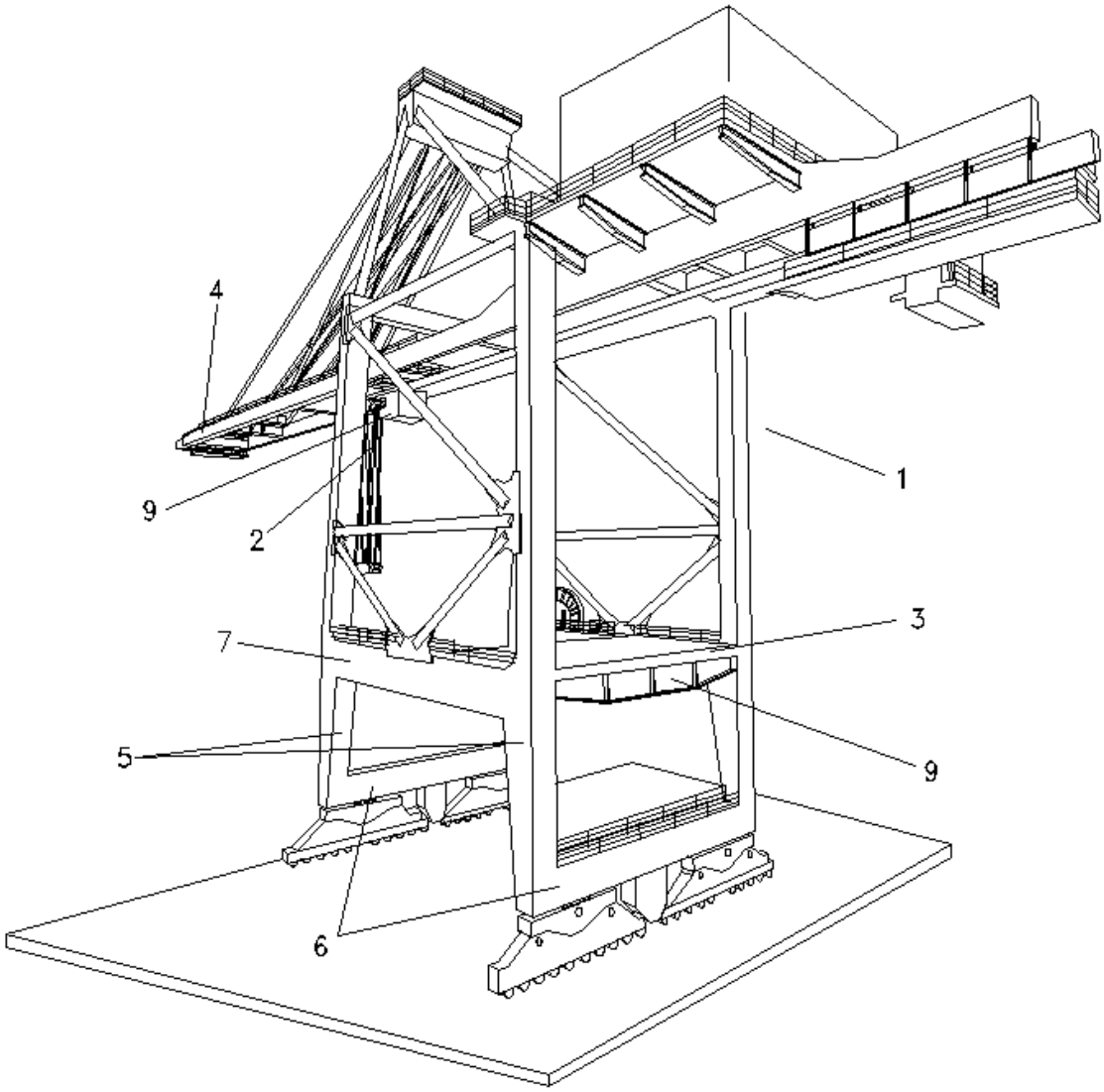


Figure 1

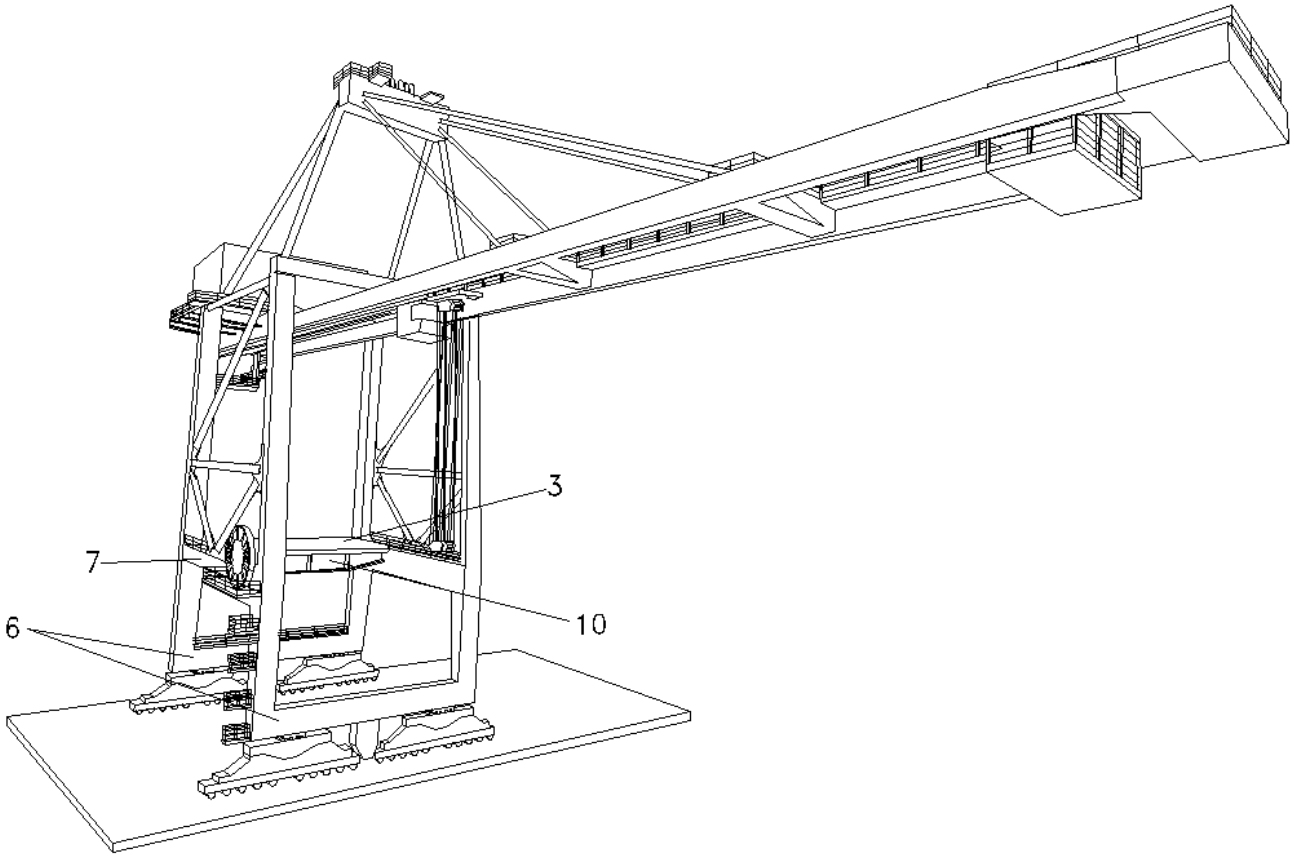


Figure 2

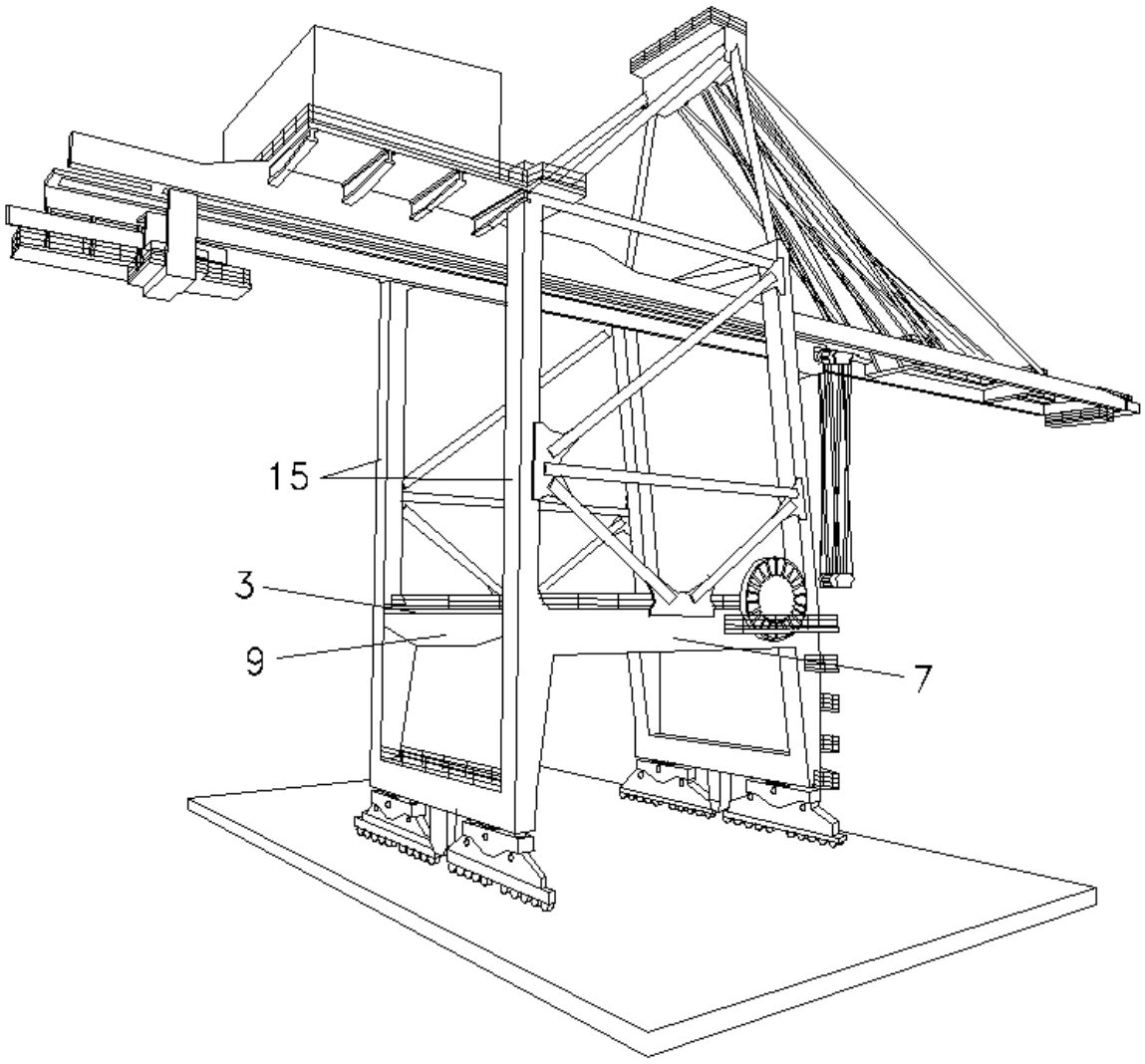


Figure 3