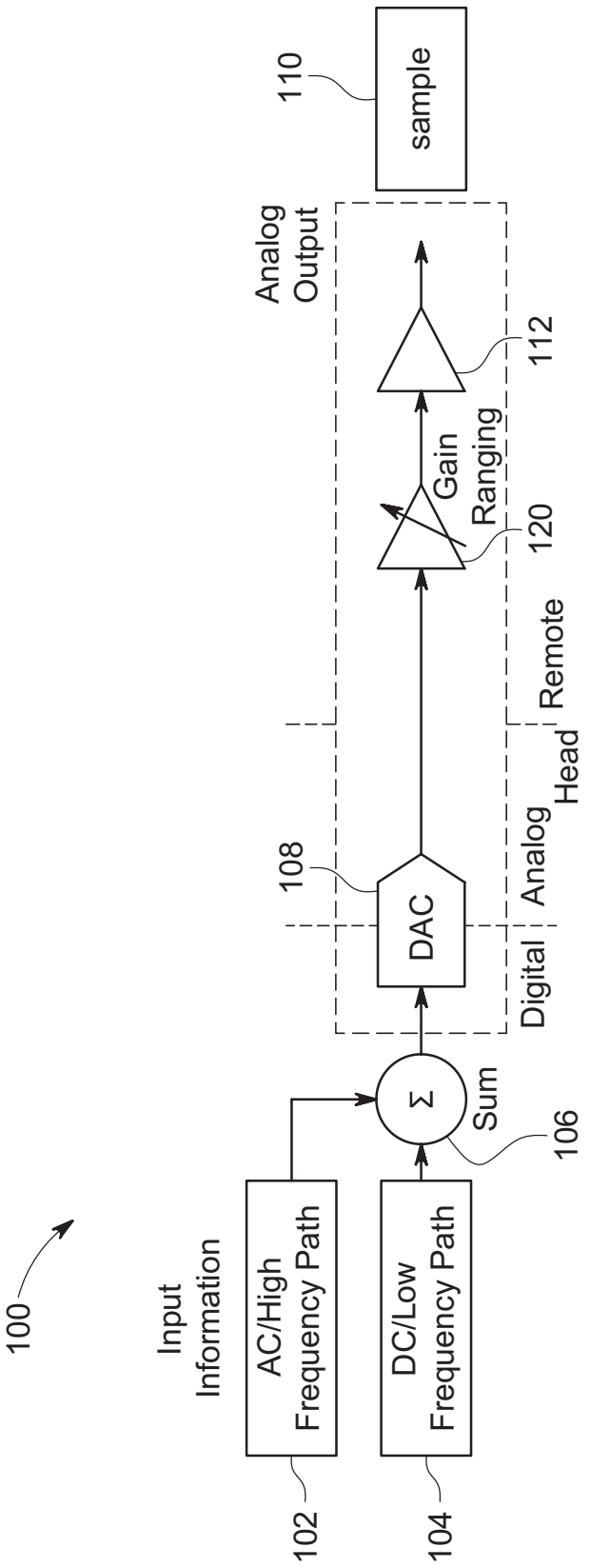
100
Input Information
AC/High Frequency Path
DC/Low Frequency Path
102
104
Σ
Sum
106
DAC
108
Digital
Analog
Head
Remote
Gain Ranging
120
112
Analog Output
sample
110

FIG. 1A

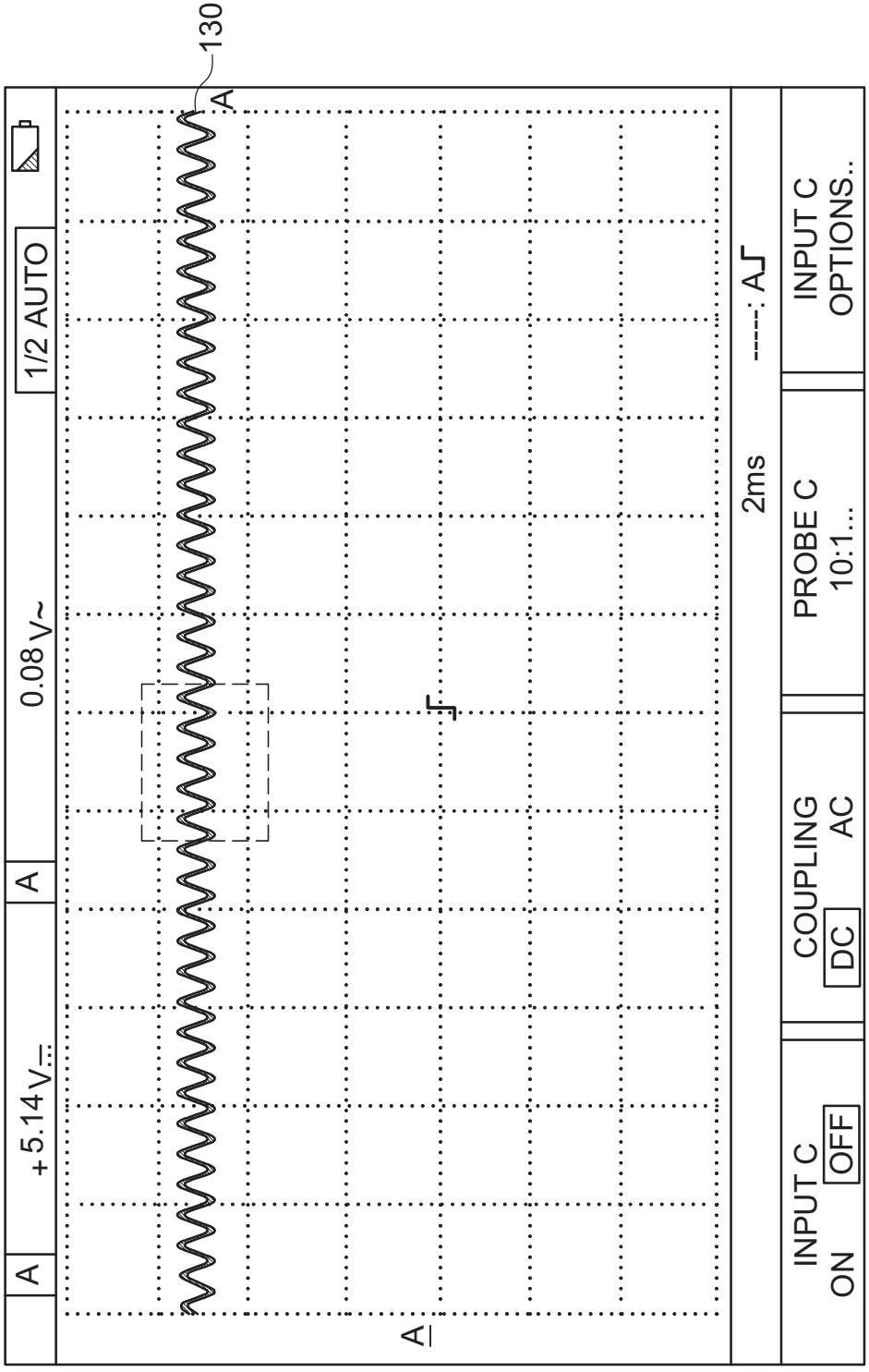
130
A
A
+5.14 V⎓
A
0.08 V~
1/2 AUTO
A
2ms
----: A
INPUT C
ON OFF
COUPLING
DC AC
PROBE C
10:1...
INPUT C
OPTIONS..

FIG. 1B

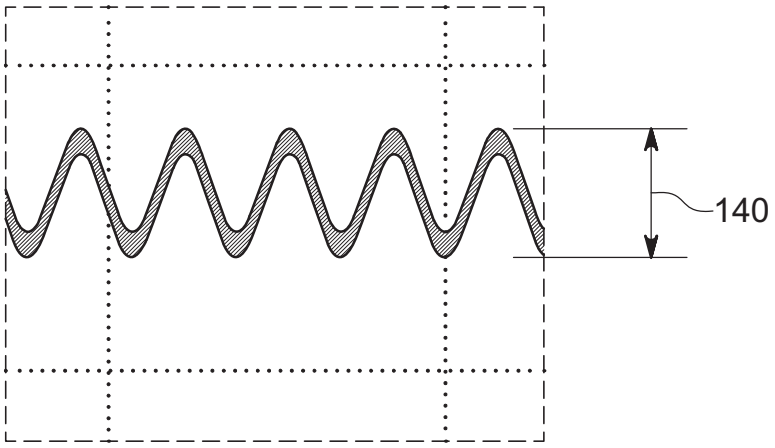

FIG. 1C

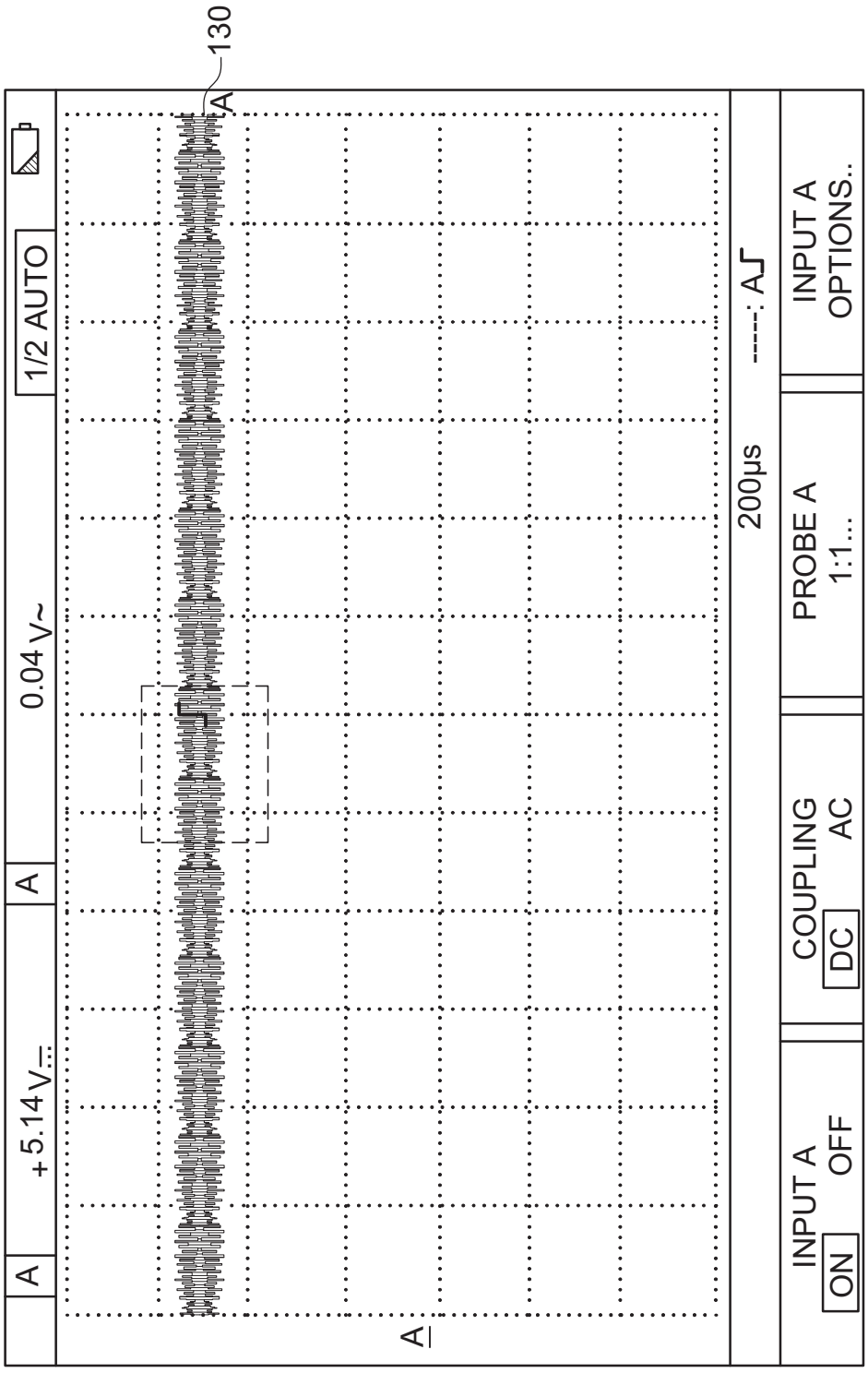
130
A
A
+5.14 V⎓
A
0.04 V~
1/2 AUTO
200µs
----: A⌐
INPUT A
ON OFF
COUPLING
DC AC
PROBE A
1:1...
INPUT A
OPTIONS..

FIG. 1D

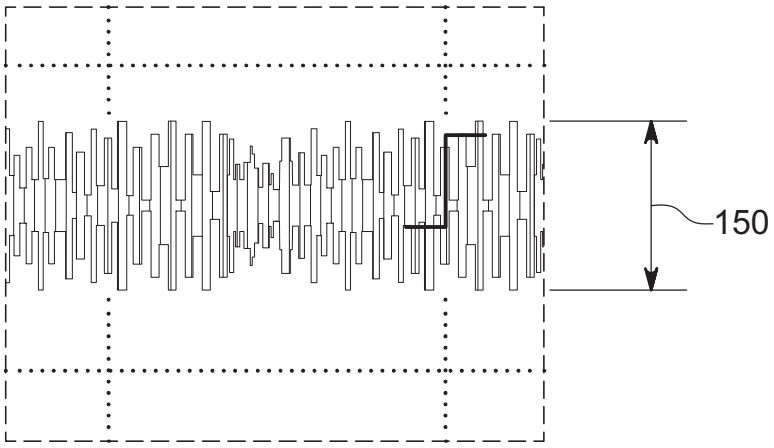

FIG. 1E

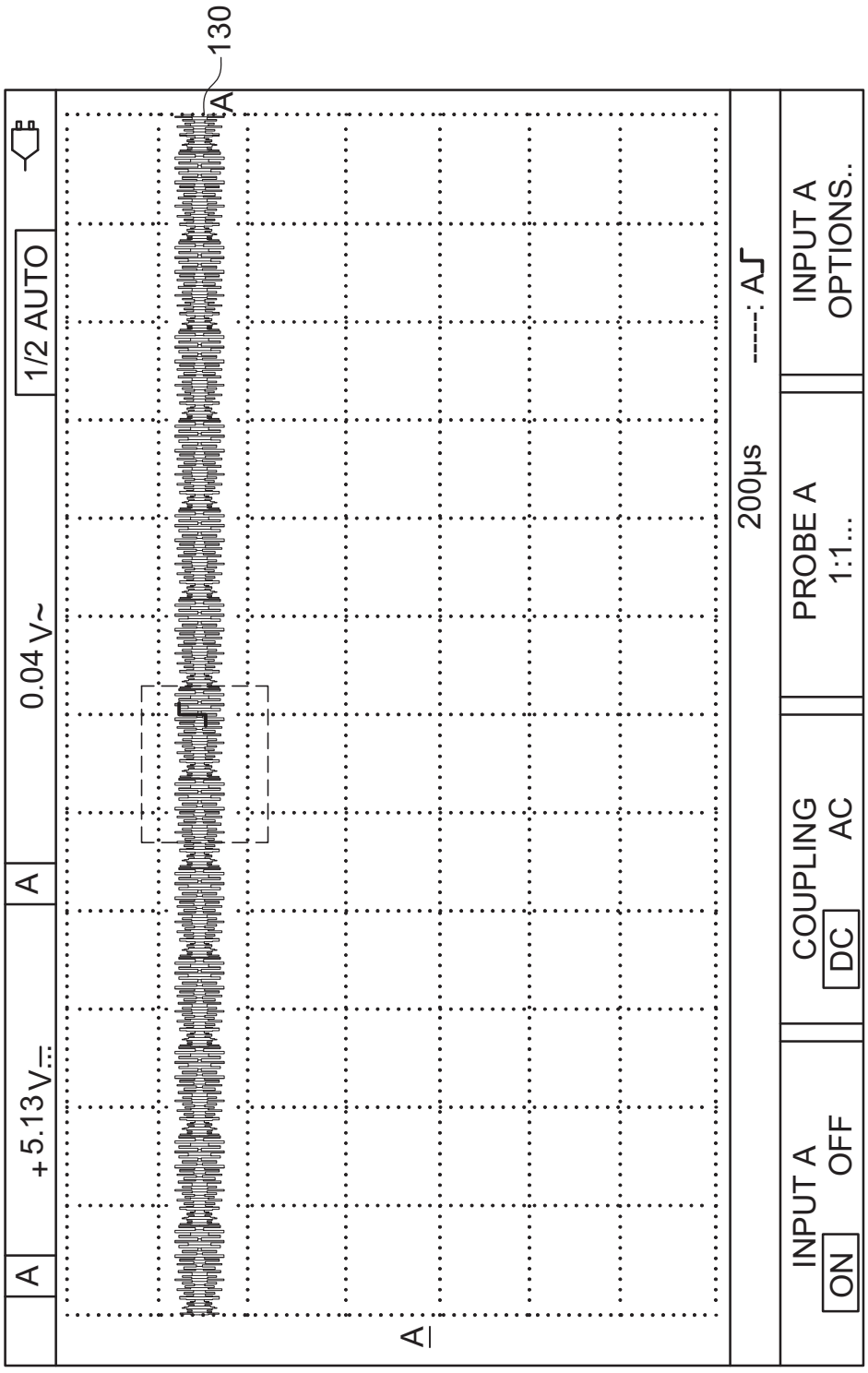
130
A
A
+5.13V⎓
A
0.04V~
1/2 AUTO
200µs
----: AJ
INPUT A
ON OFF
COUPLING
DC AC
PROBE A
1:1...
INPUT A
OPTIONS..

FIG. 1F

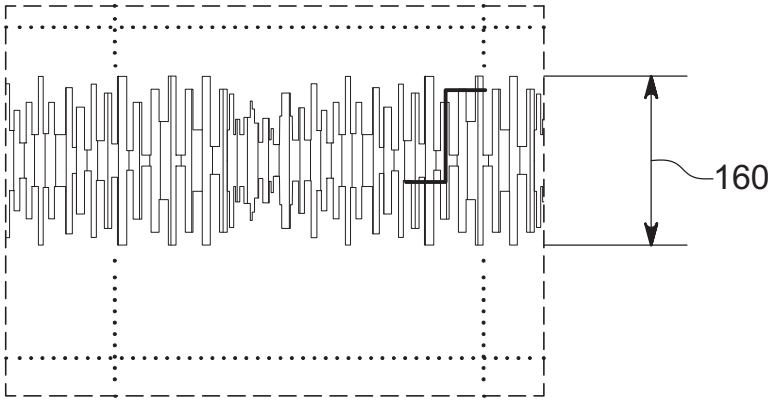

FIG. 1G

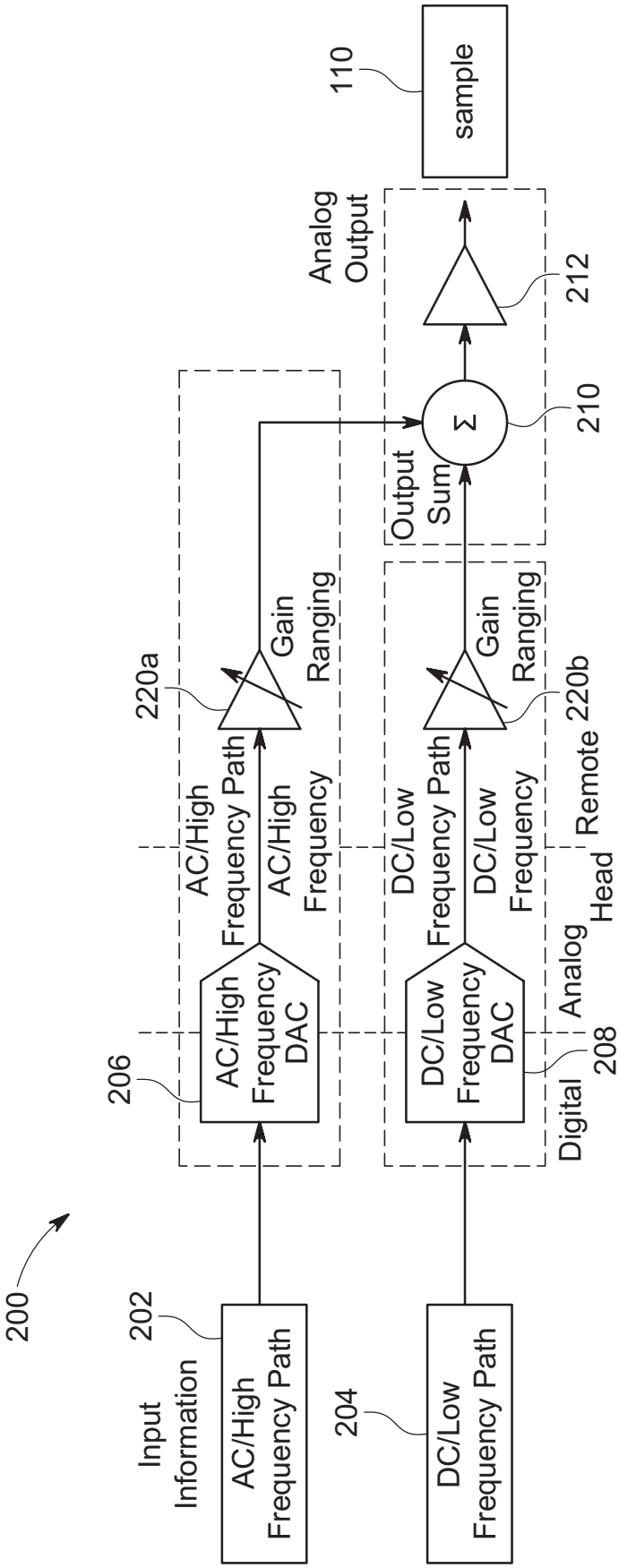
200
202
Input Information
AC/High Frequency Path
204
DC/Low Frequency Path
206
AC/High Frequency DAC
DC/Low Frequency DAC
Digital
Analog
Remote Head
AC/High Frequency Path
AC/High Frequency
DC/Low Frequency Path
DC/Low Frequency
220a
220b
Gain Ranging
Gain Ranging
Output Sum
Σ
210
Analog Output
212
110
sample

FIG. 2

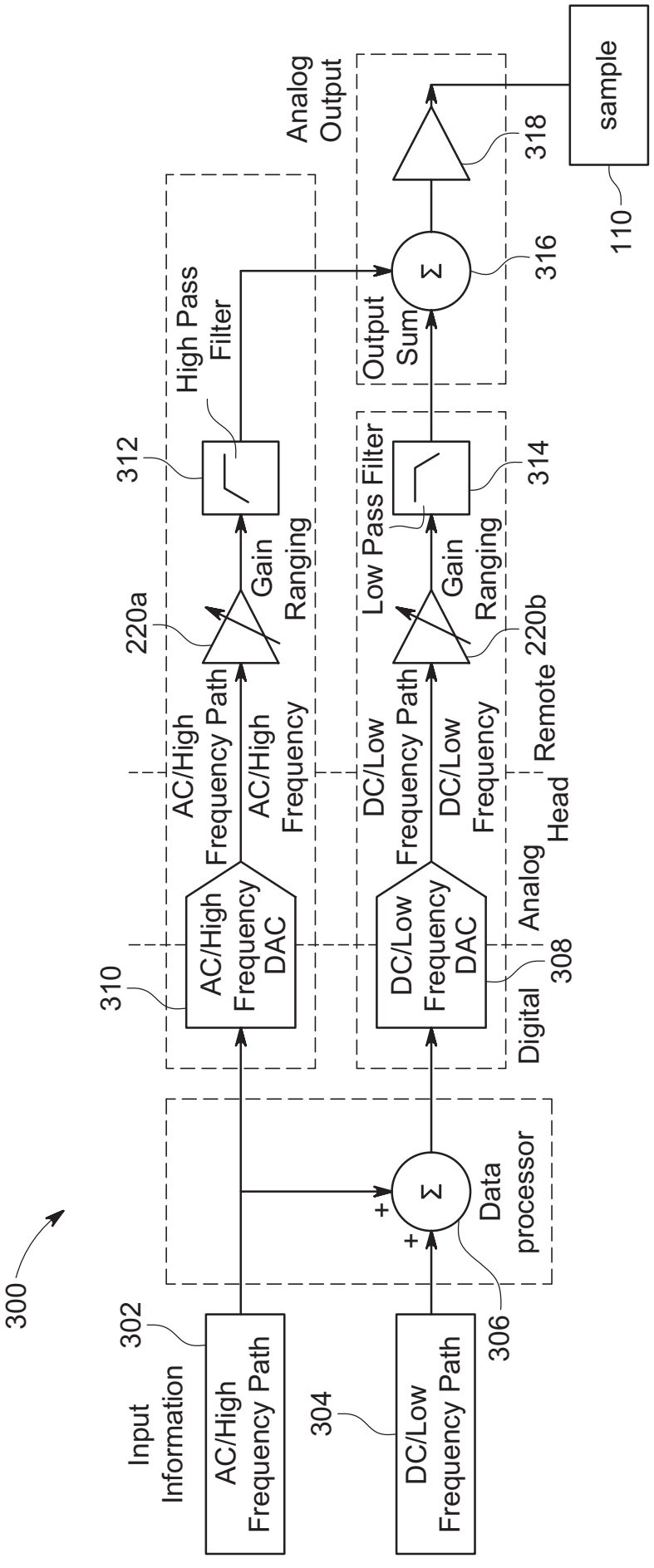
300
Input Information
302
AC/High Frequency Path
304
DC/Low Frequency Path
306
Data processor
+
+
Σ
310
AC/High Frequency DAC
AC/High Frequency Path
AC/High Frequency
220a
Gain Ranging
312
High Pass Filter
DC/Low Frequency DAC
DC/Low Frequency Path
DC/Low Frequency
220b
Gain Ranging
Low Pass Filter
314
Digital
Analog
Remote Head
308
Analog Output
Output Sum
Σ
316
318
sample
110

FIG. 3

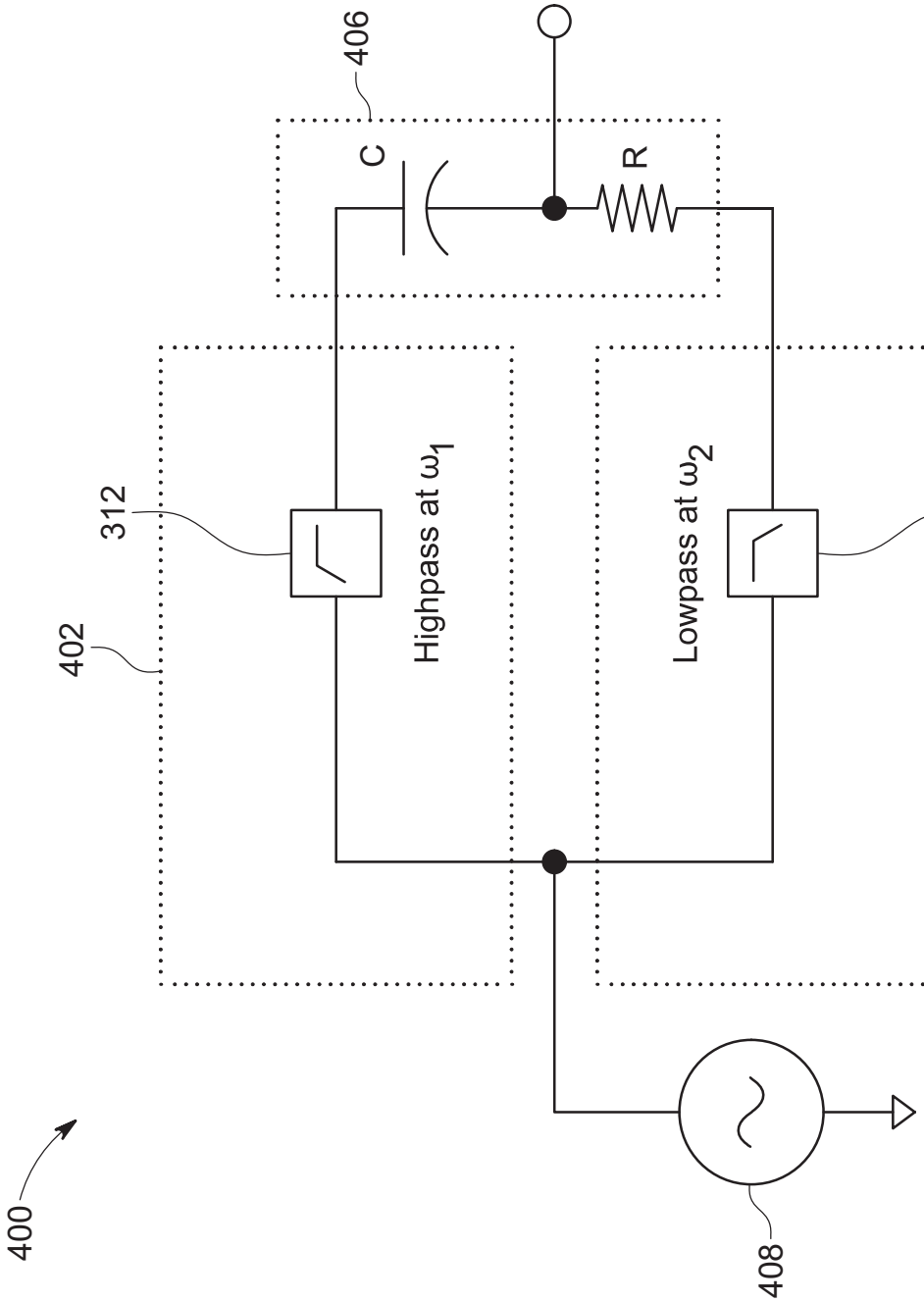
400
402
404
406
408
312
314
C
R
Highpass at ω_1
Lowpass at ω_2

FIG. 4

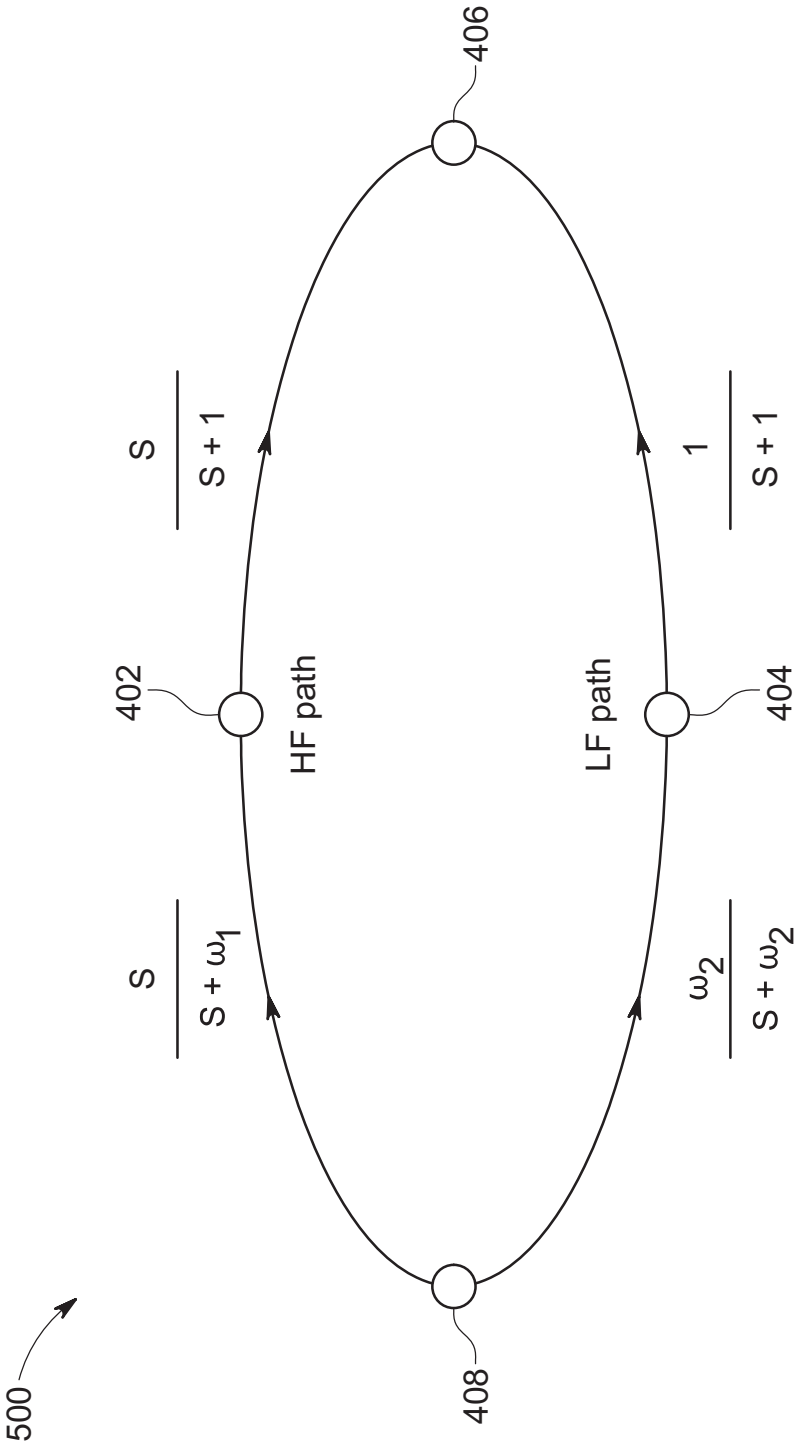

FIG. 5

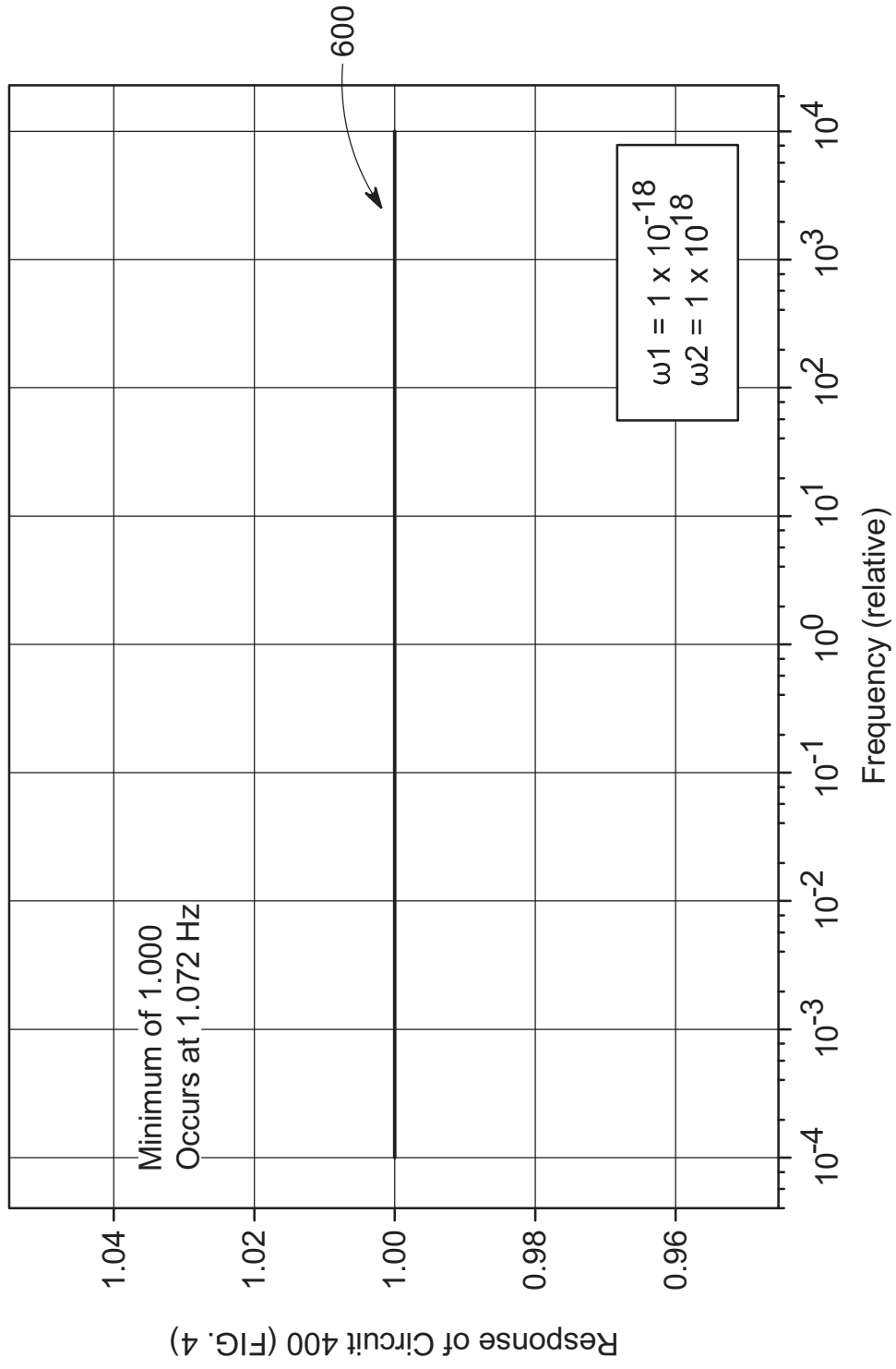
600
Minimum of 1.000
Occurs at 1.072 Hz
ω1 = 1 x 10^-18
ω2 = 1 x 10^18
Response of Circuit 400 (FIG. 4)
1.04
1.02
1.00
0.98
0.96
10^-4
10^-3
10^-2
10^-1
10^0
10^1
10^2
10^3
10^4
Frequency (relative)

FIG. 6

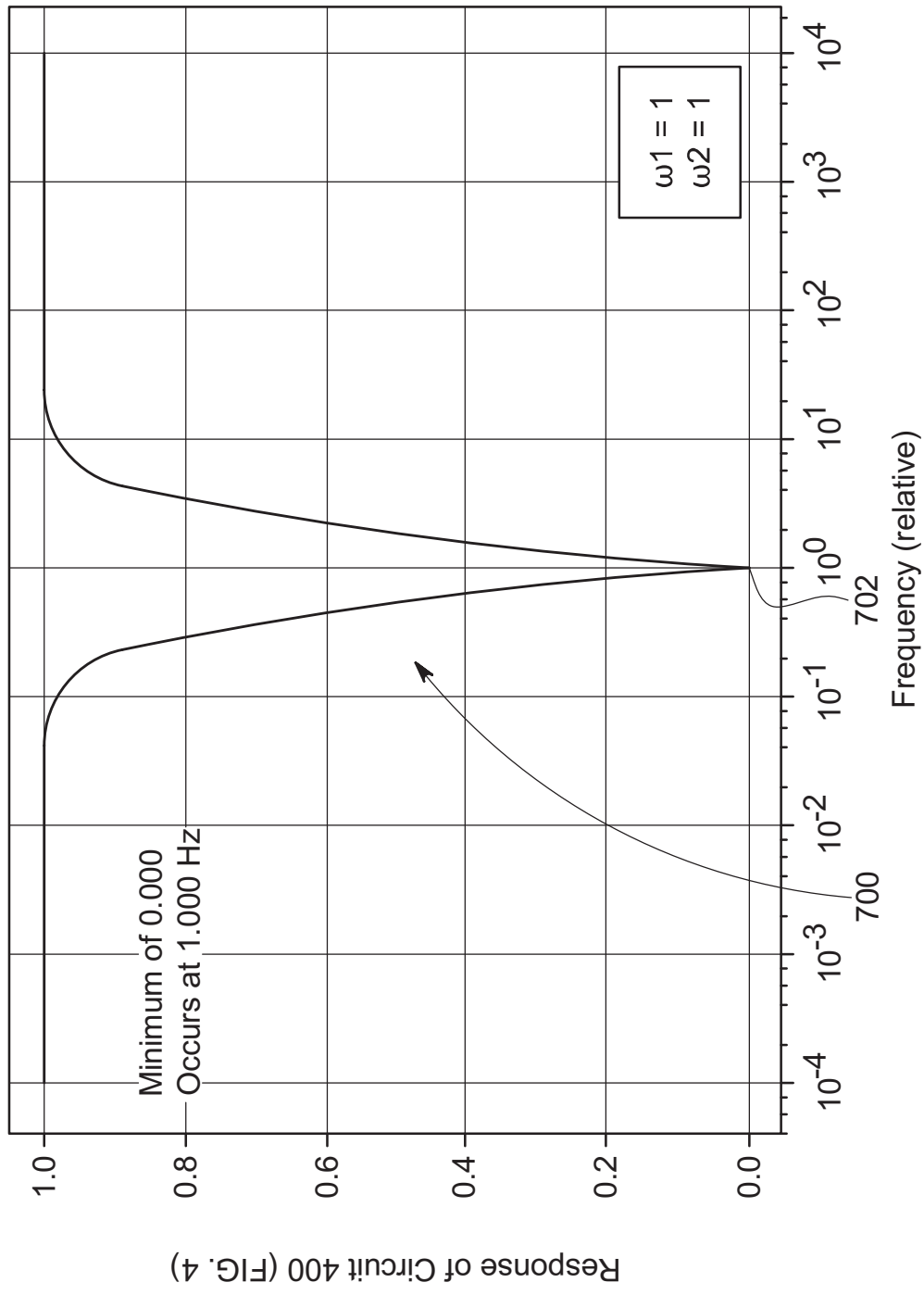
Response of Circuit 400 (FIG. 4)
1.0
0.8
0.6
0.4
0.2
0.0
Minimum of 0.000
Occurs at 1.000 Hz
ω1 = 1
ω2 = 1
700
702
10^{-4}
10^{-3}
10^{-2}
10^{-1}
10^{0}
10^{1}
10^{2}
10^{3}
10^{4}
Frequency (relative)

FIG. 7

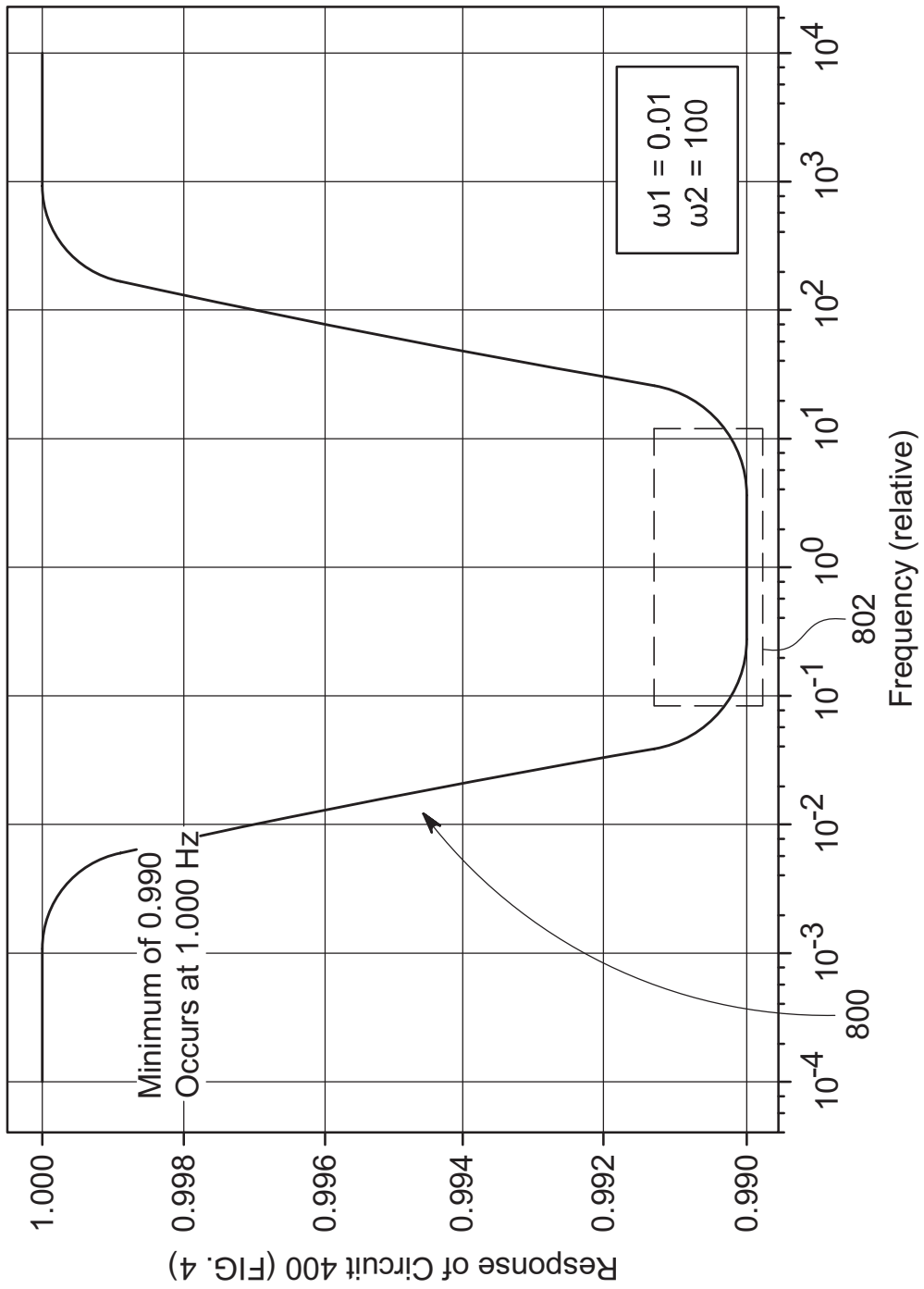
Response of Circuit 400 (FIG. 4)
1.000
0.998
0.996
0.994
0.992
0.990
Minimum of 0.990
Occurs at 1.000 Hz
ω1 = 0.01
ω2 = 100
800
802
Frequency (relative)
10^-4
10^-3
10^-2
10^-1
10^0
10^1
10^2
10^3
10^4

FIG. 8

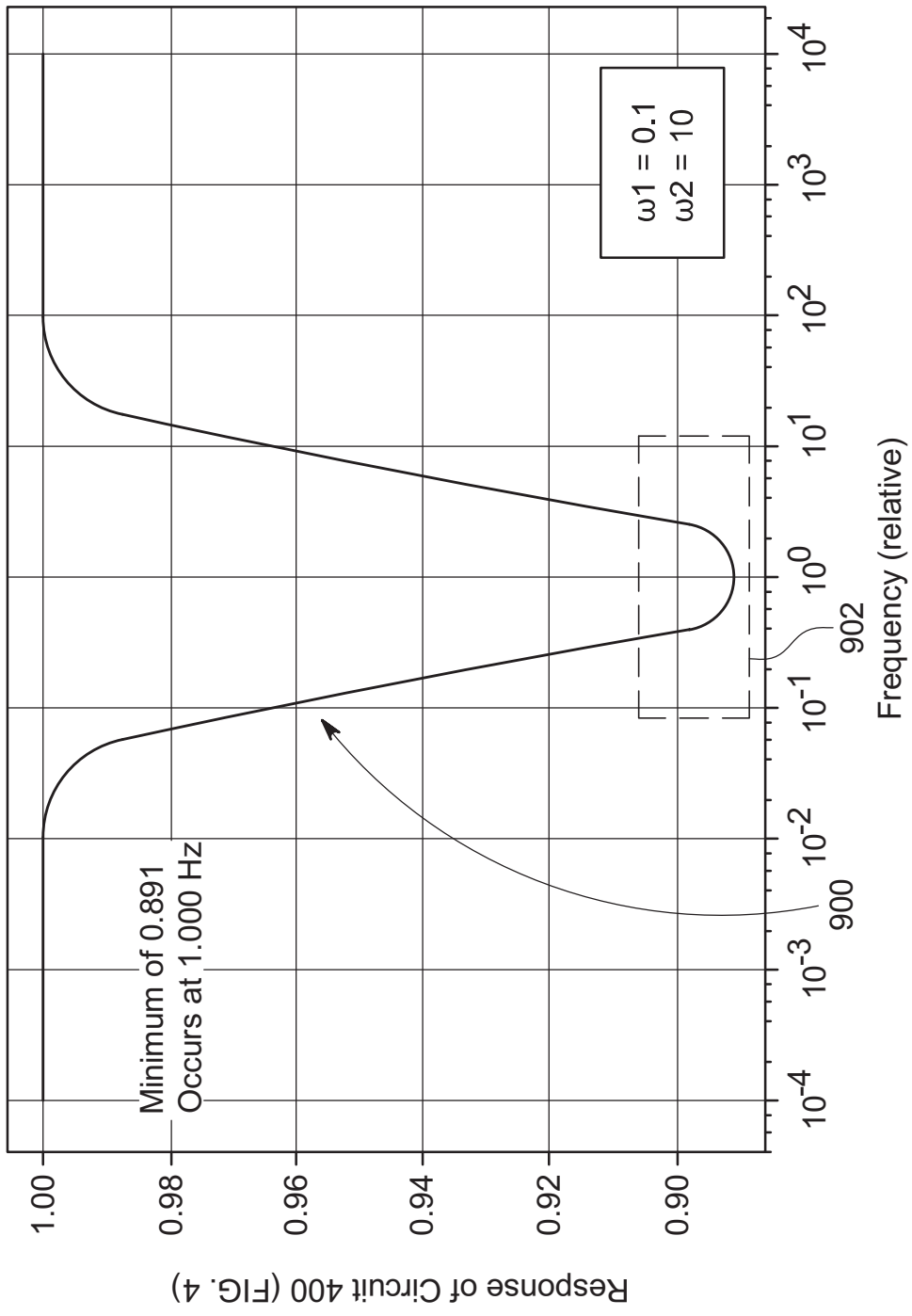
Response of Circuit 400 (FIG. 4)
1.00
0.98
0.96
0.94
0.92
0.90
Minimum of 0.891
Occurs at 1.000 Hz
ω1 = 0.1
ω2 = 10
900
902
Frequency (relative)
10^-4
10^-3
10^-2
10^-1
10^0
10^1
10^2
10^3
10^4

FIG. 9

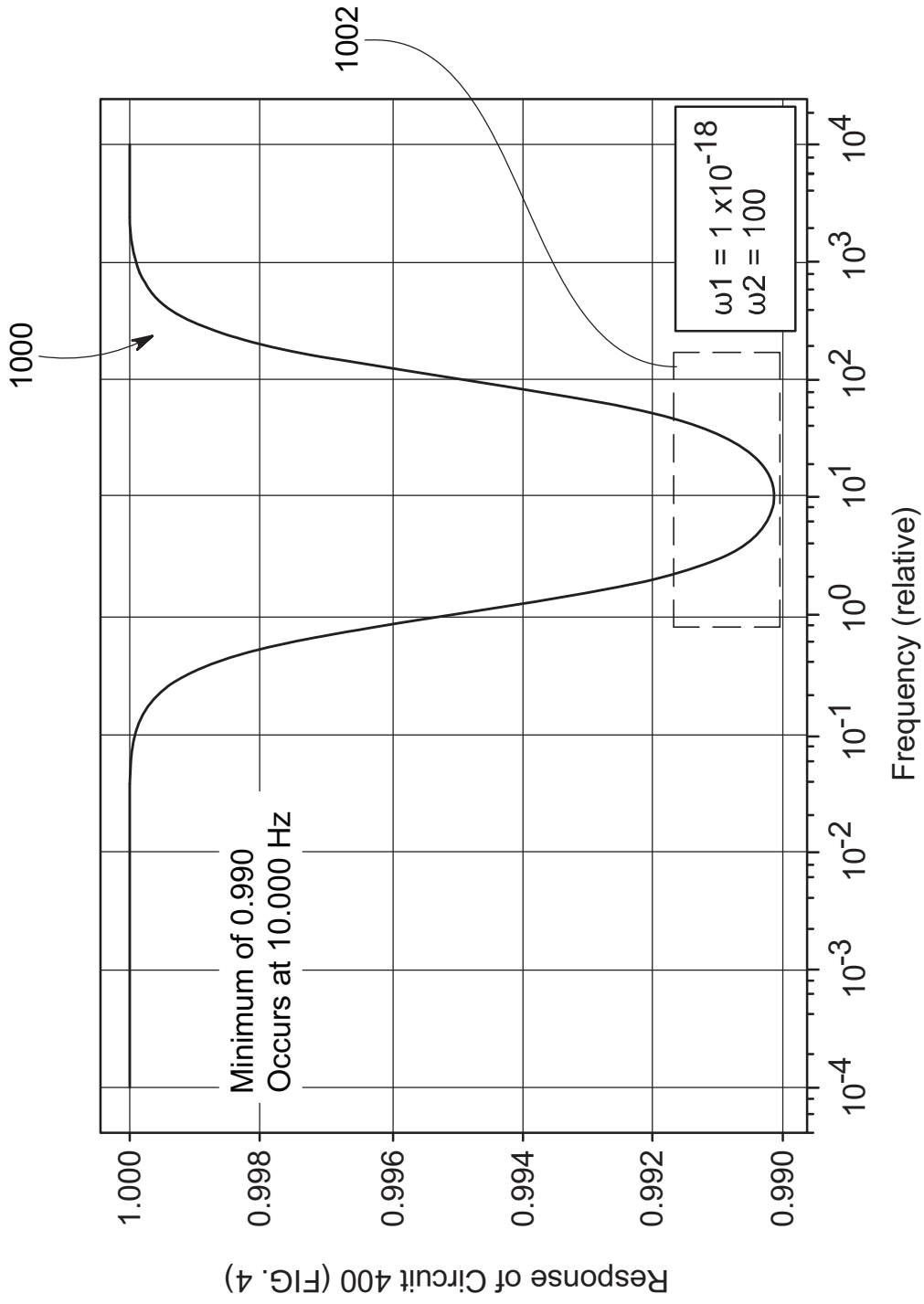
1000
1002
Minimum of 0.990
Occurs at 10.000 Hz
ω1 = 1 x10-18
ω2 = 100
1.000
0.998
0.996
0.994
0.992
0.990
10-4
10-3
10-2
10-1
100
101
102
103
104
Frequency (relative)
Response of Circuit 400 (FIG. 4)

FIG. 10

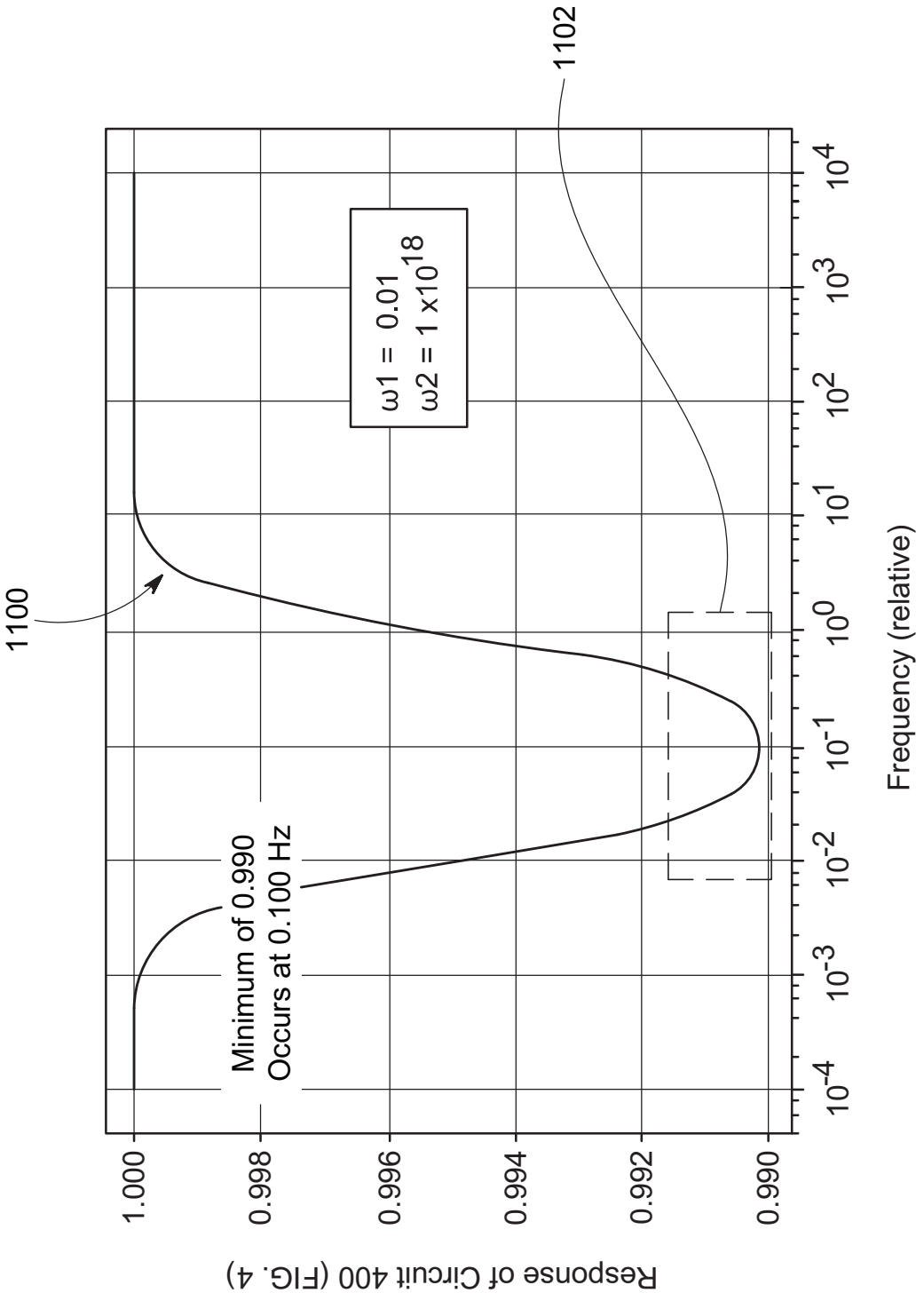
1100
1102
Minimum of 0.990
Occurs at 0.100 Hz
ω1 = 0.01
ω2 = 1 x10^18
Response of Circuit 400 (FIG. 4)
1.000
0.998
0.996
0.994
0.992
0.990
10^-4
10^-3
10^-2
10^-1
10^0
10^1
10^2
10^3
10^4
Frequency (relative)

FIG. 11

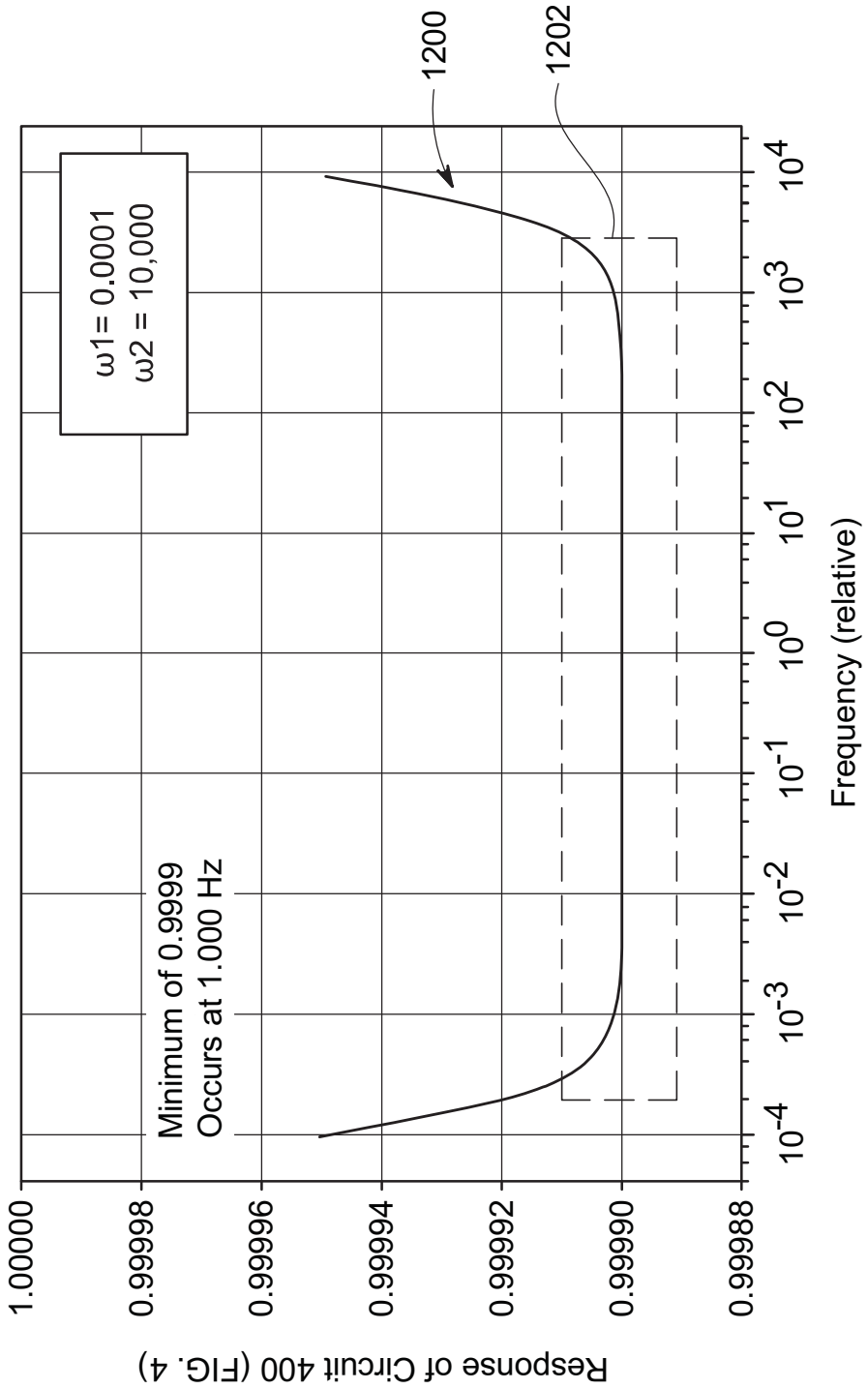
1200
1202
ω1= 0.0001
ω2 = 10,000
Minimum of 0.9999
Occurs at 1.000 Hz
1.00000
0.99998
0.99996
0.99994
0.99992
0.99990
0.99988
Response of Circuit 400 (FIG. 4)
10-4
10-3
10-2
10-1
100
101
102
103
104
Frequency (relative)

FIG. 12

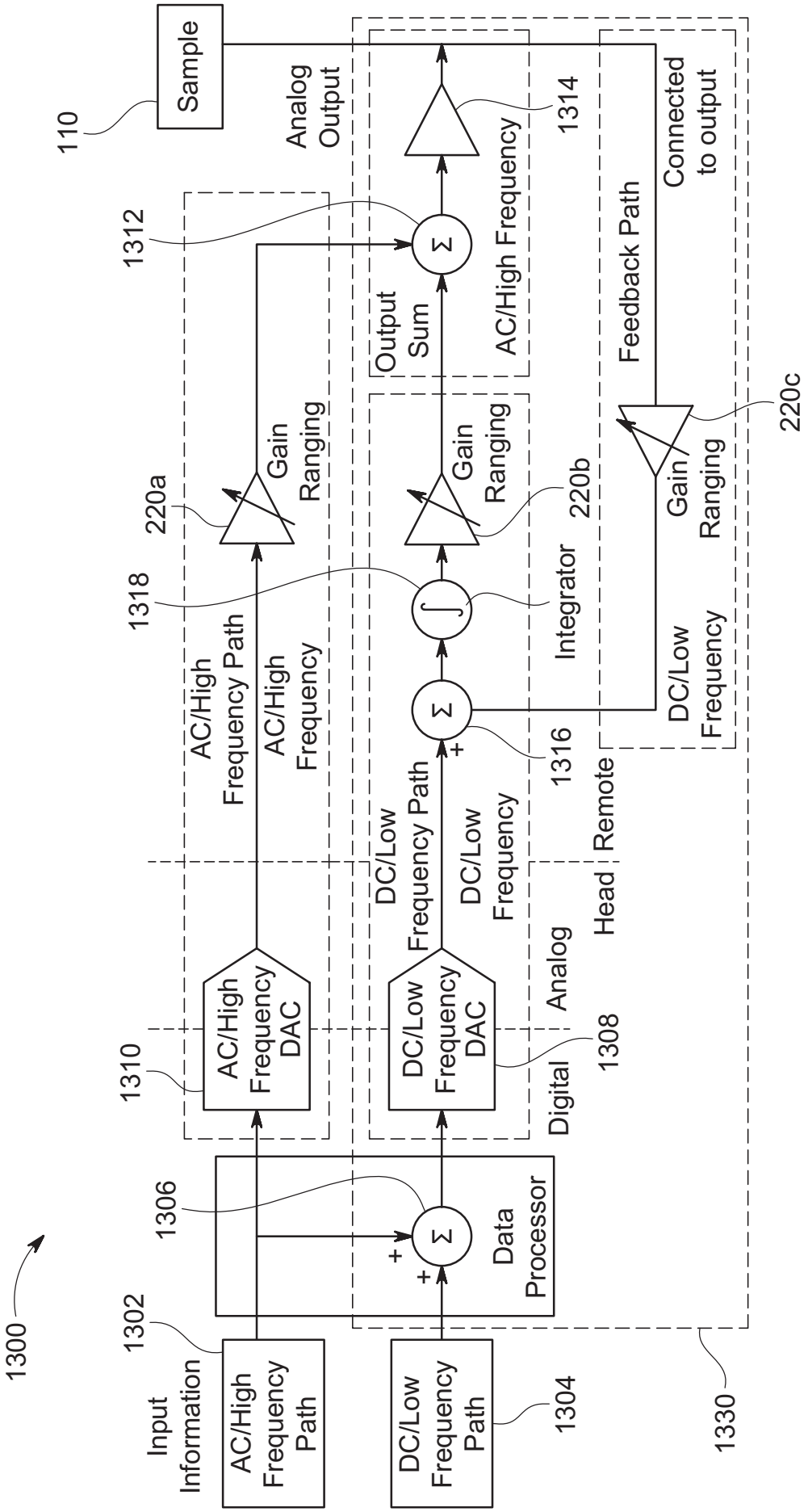
1300
1302
Input Information
AC/High Frequency Path
DC/Low Frequency Path
1304
1306
Data Processor
1308
Digital
Analog
Head
Remote
1310
AC/High Frequency DAC
DC/Low Frequency DAC
AC/High Frequency Path
AC/High Frequency
DC/Low Frequency Path
DC/Low Frequency
1312
1314
AC/High Frequency
Output Sum
1316
1318
Integrator
220a
220b
220c
Gain Ranging
Feedback Path
Connected to output
DC/Low Frequency
1330
110
Sample
Analog Output

FIG. 13

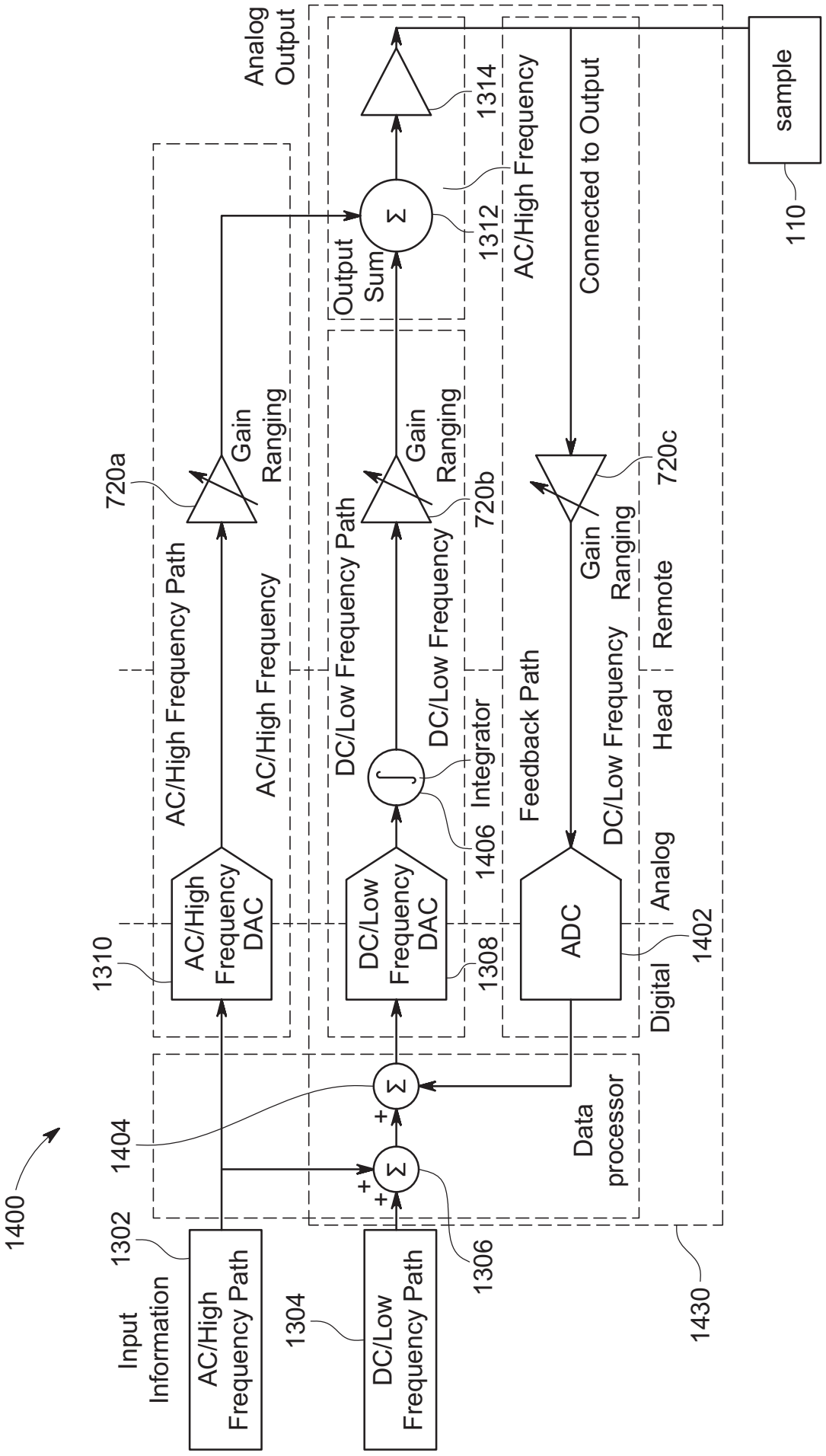
1400
Input Information
1302
AC/High Frequency Path
1304
DC/Low Frequency Path
1306
1404
Σ
+
+
Data processor
1430
1310
AC/High Frequency DAC
1308
DC/Low Frequency DAC
ADC
1402
Digital
Analog
Head
Remote
AC/High Frequency Path
AC/High Frequency
DC/Low Frequency Path
DC/Low Frequency
Feedback Path
DC/Low Frequency
720a
Gain Ranging
720b
Gain Ranging
720c
Gain Ranging
1406
Integrator
Output Sum
1312
1314
Analog Output
AC/High Frequency
Connected to Output
sample
110

FIG. 14

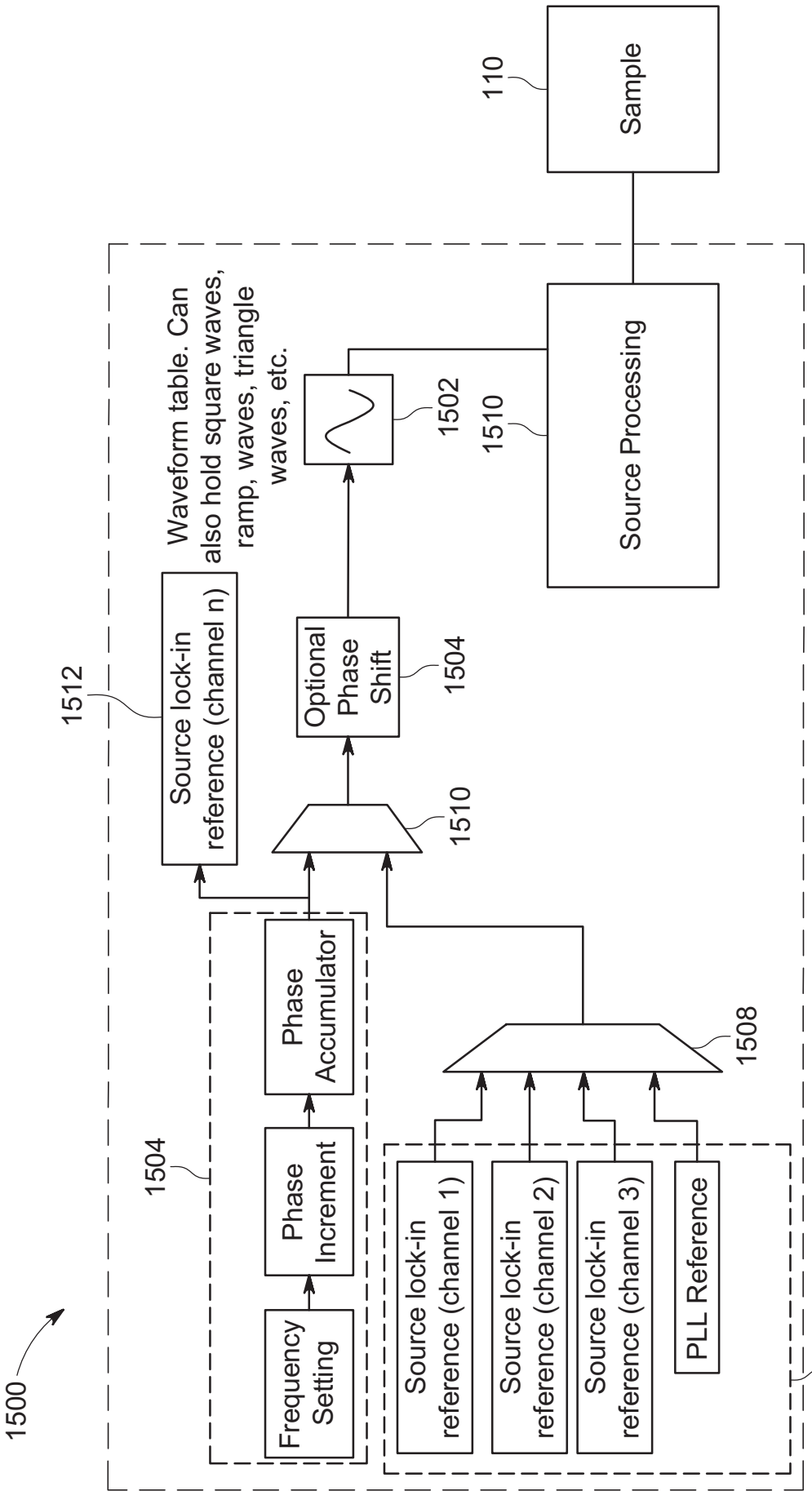
1500
Frequency Setting
Phase Increment
Phase Accumulator
1504
Source lock-in reference (channel 1)
Source lock-in reference (channel 2)
Source lock-in reference (channel 3)
PLL Reference
1506
1508
1510
Optional Phase Shift
1504
Source lock-in reference (channel n)
1512
Waveform table. Can also hold square waves, ramp, waves, triangle waves, etc.
1502
1510
Source Processing
110
Sample

FIG. 15

1600

Position	Output
0	0.000
1	0.500
2	0.866
3	1.000
4	0.866
5	0.500
6	0.000
7	-0.500
8	-8.666
9	-1.000
10	-0.866
11	-0.500

FIG. 16

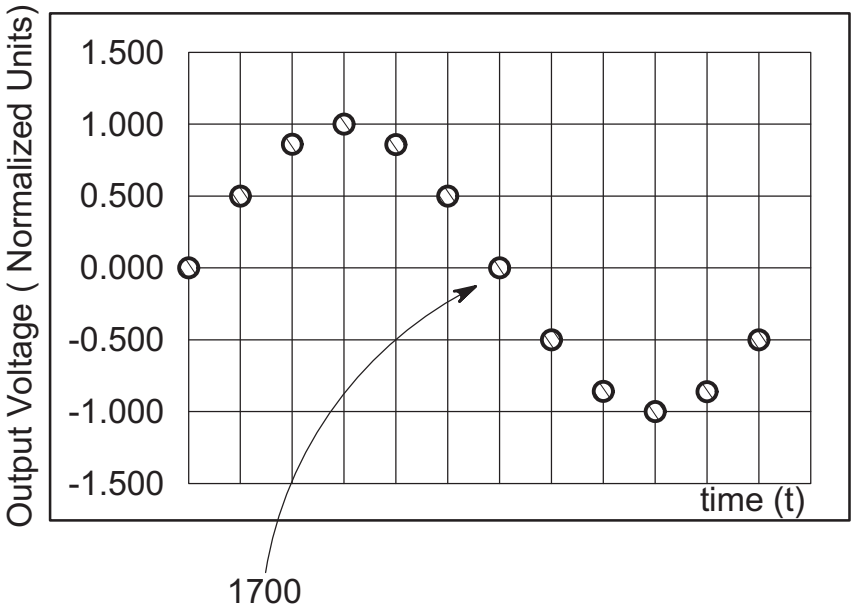

FIG. 17

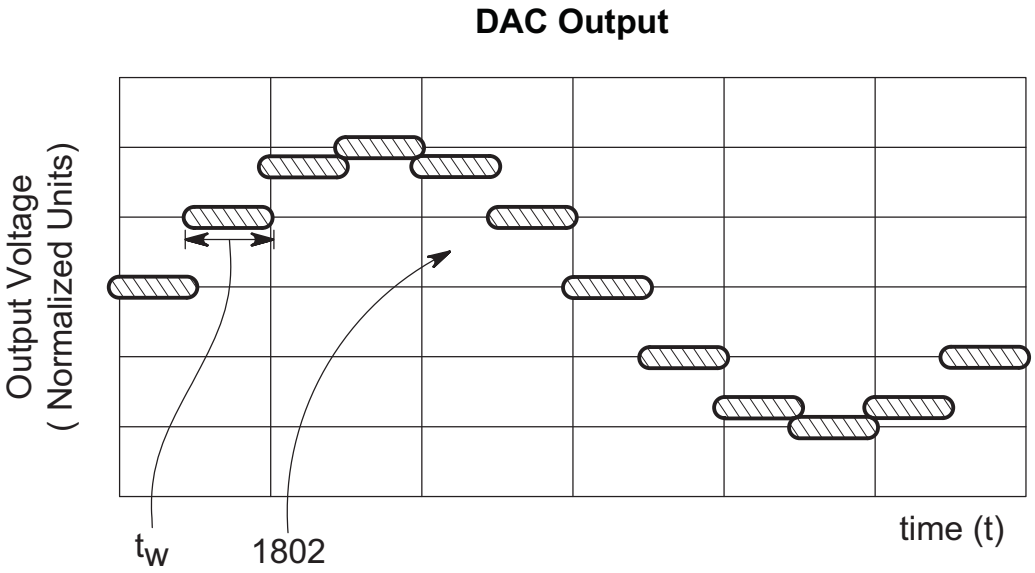

FIG. 18A

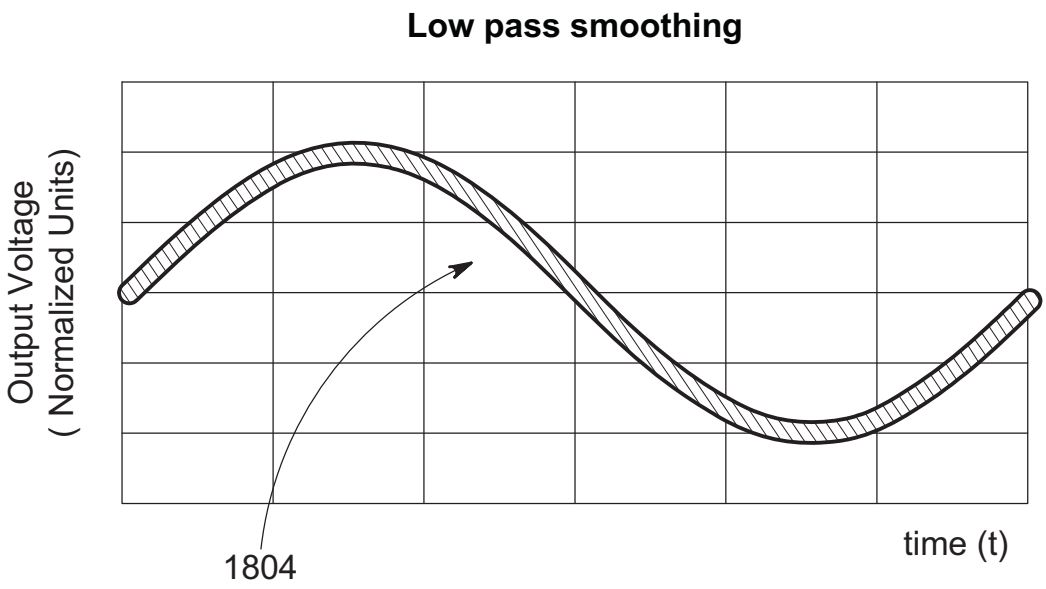
Low pass smoothing
Output Voltage
(Normalized Units)
1804
time (t)

FIG. 18B

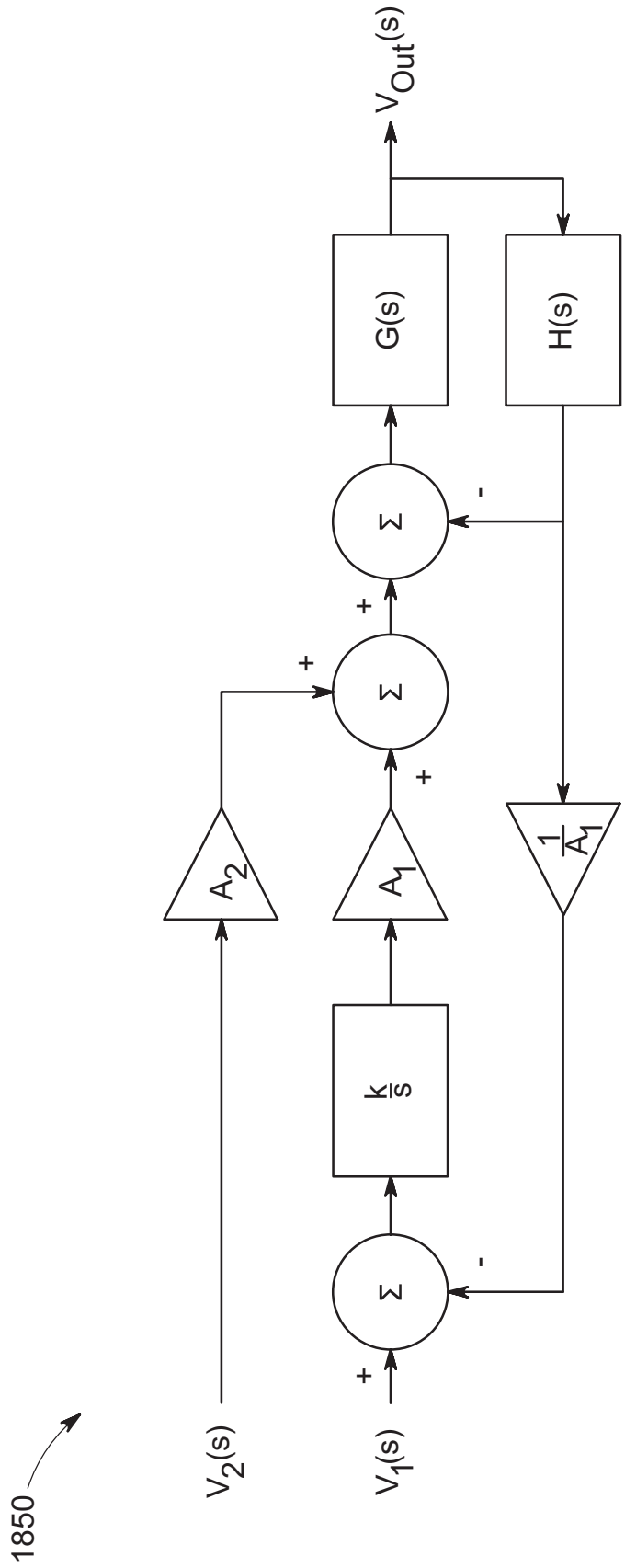

FIG. 18C

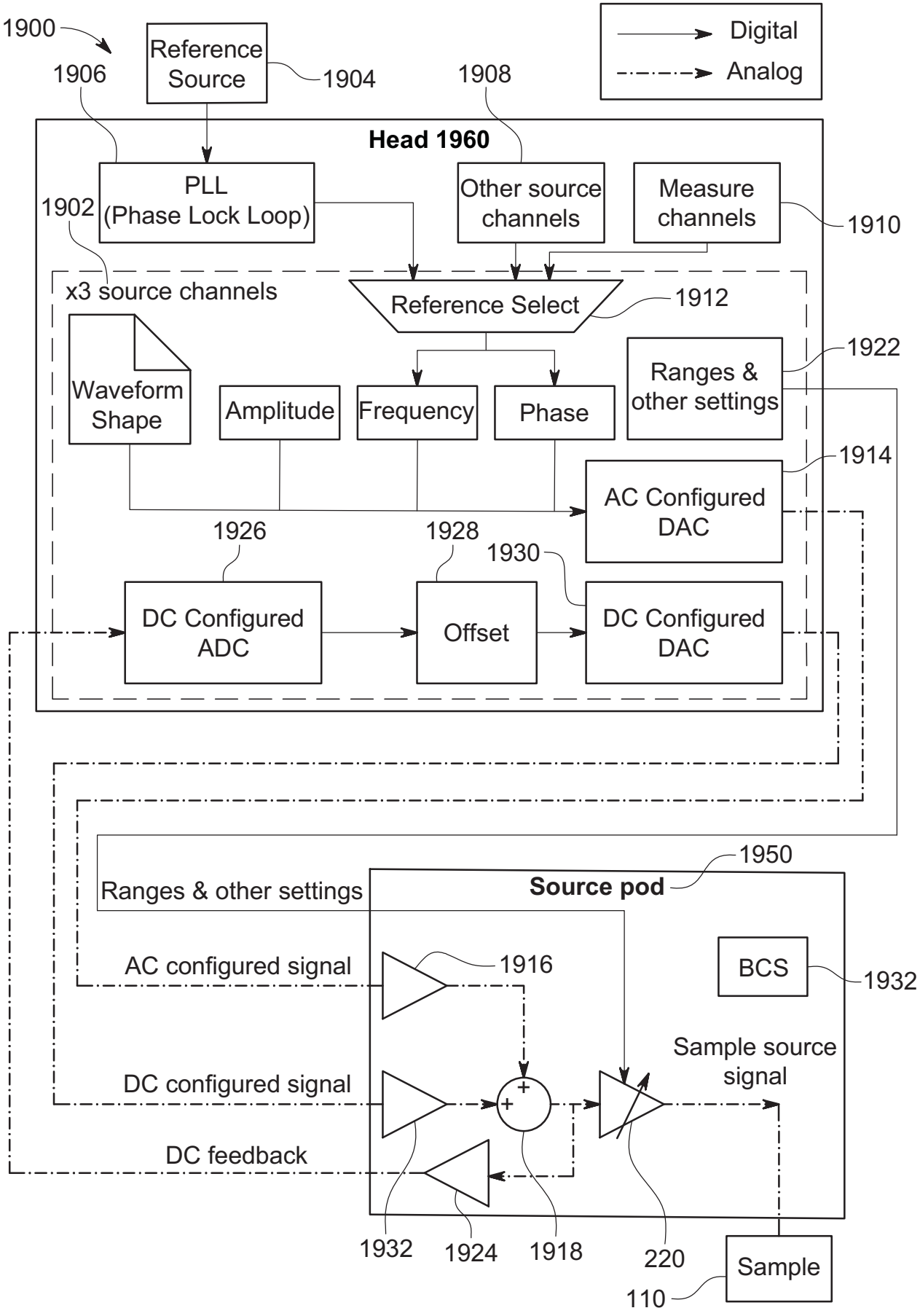
1900
Reference Source
1904
1906
1908
Digital
Analog
Head 1960
PLL (Phase Lock Loop)
1902
Other source channels
Measure channels
1910
x3 source channels
Reference Select
1912
Waveform Shape
Amplitude
Frequency
Phase
Ranges & other settings
1922
1914
AC Configured DAC
1926
1928
1930
DC Configured ADC
Offset
DC Configured DAC
1950
Ranges & other settings
Source pod
AC configured signal
1916
BCS
1932
Sample source signal
DC configured signal
DC feedback
1932
1924
1918
220
Sample
110

FIG. 19

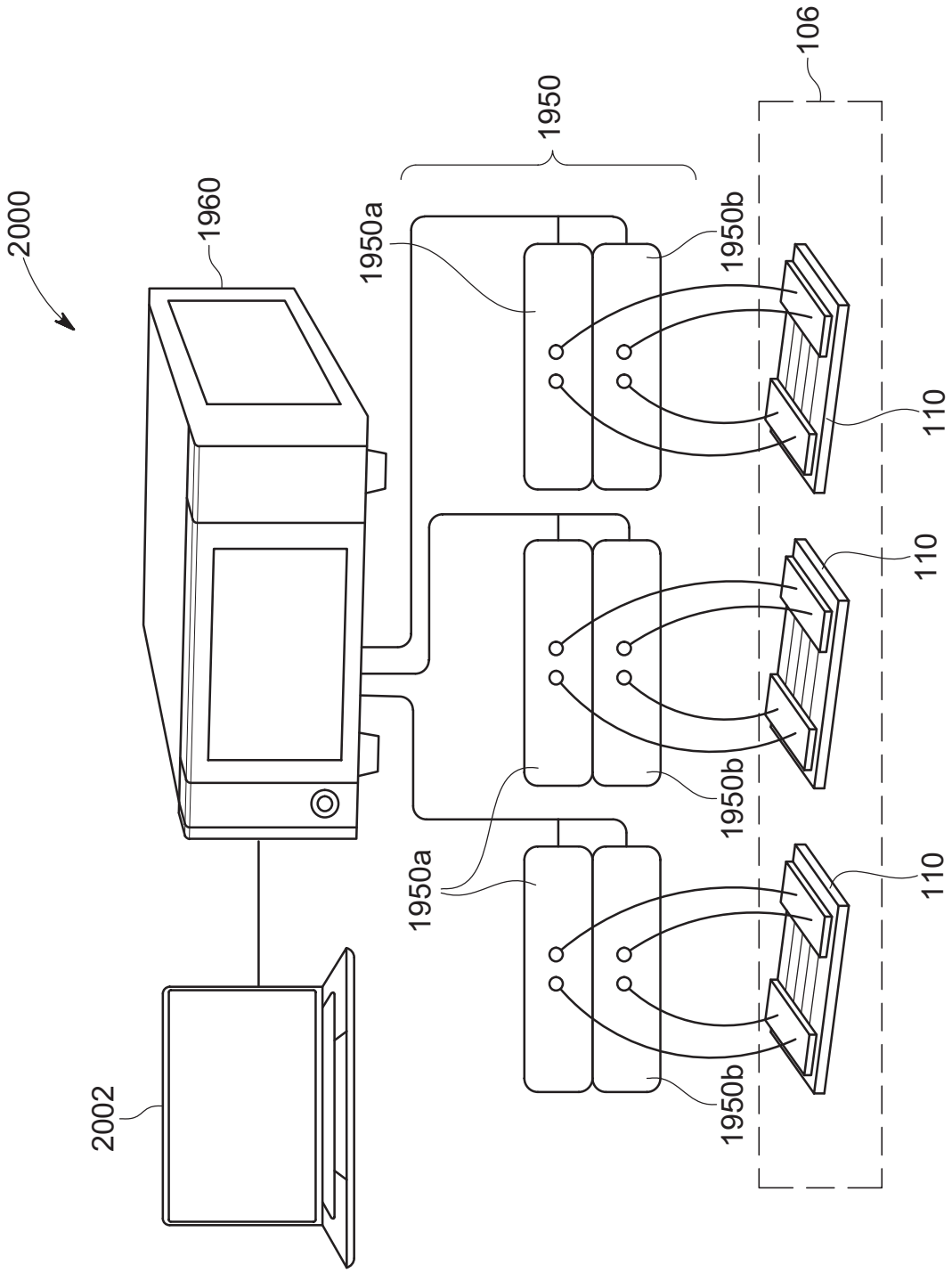
2000
1960
1950
1950a
1950b
106
110
110
110
1950a
1950b
1950b
2002

FIG. 20