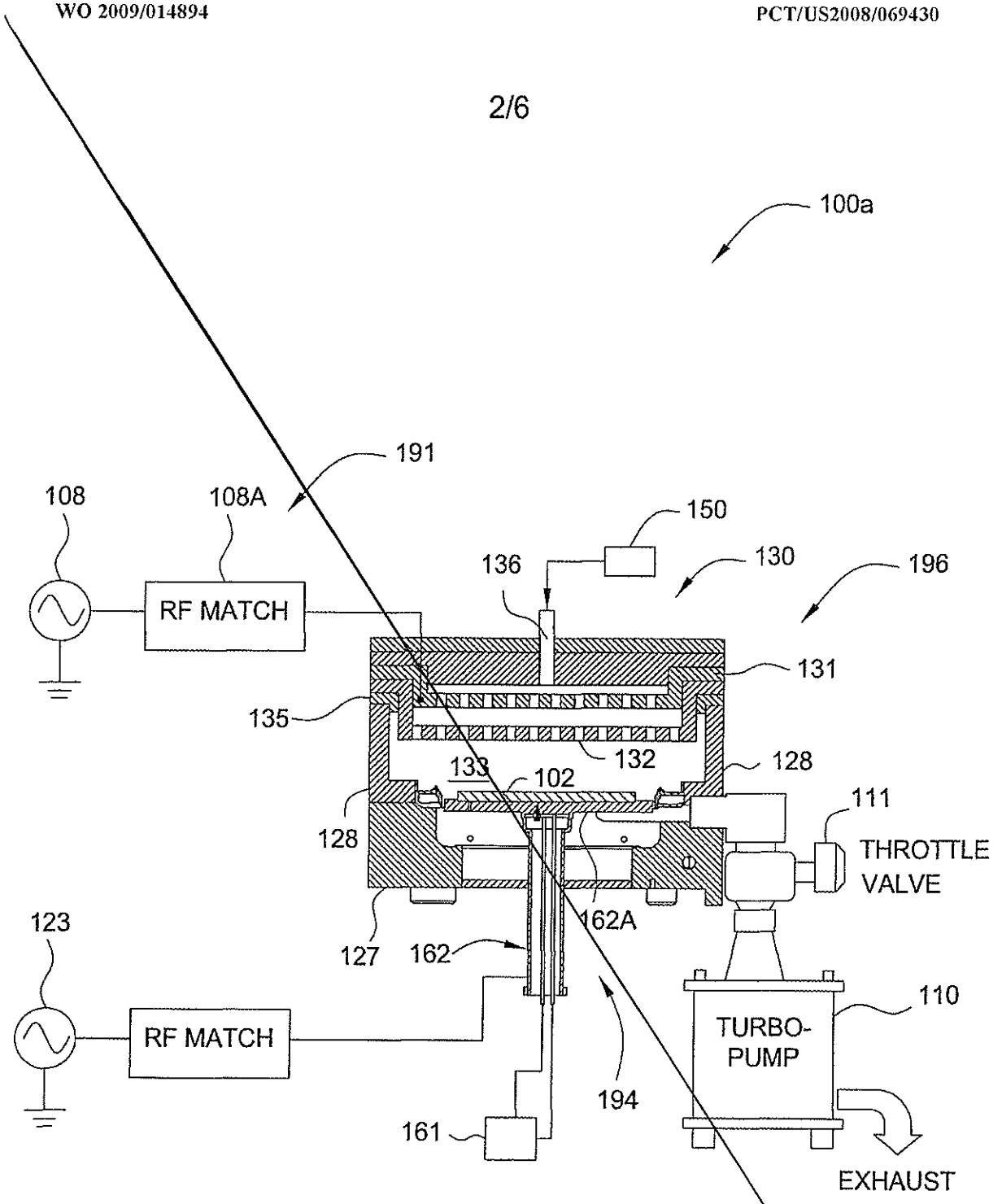
100a
191
108
108A
RF MATCH
150
136
130
196
131
135
132
133
102
128
128
111
THROTTLE VALVE
123
162A
127
162
RF MATCH
110
TURBO-PUMP
194
161
EXHAUST

FIG. 2A

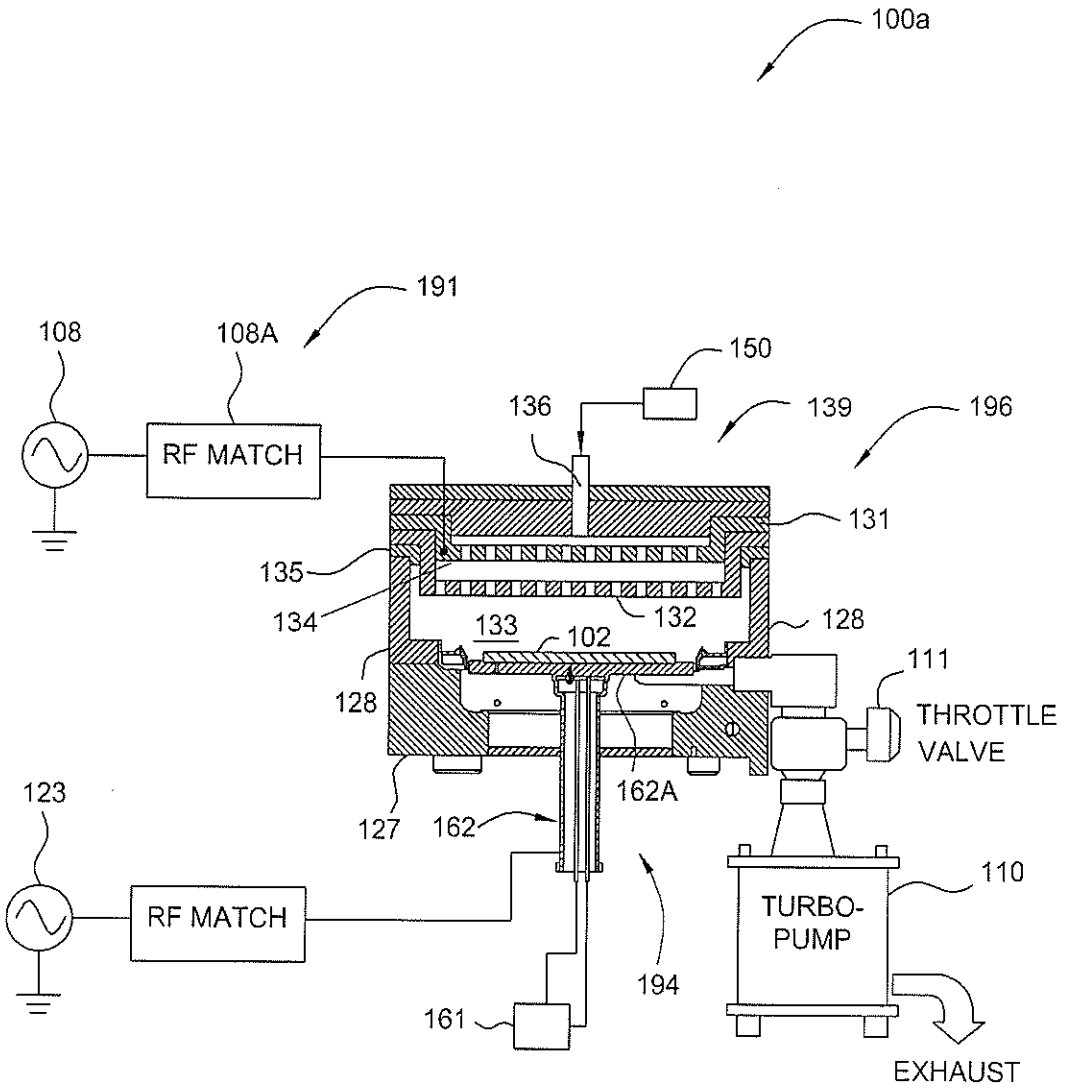
100a
191
108
108A
150
136
139
196
RF MATCH
131
135
134
132
128
133
102
128
111
THROTTLE
VALVE
123
162A
127
162
110
TURBO-
PUMP
RF MATCH
194
161
EXHAUST

FIG. 2A