(12) INTERNATIONAL APPLICATION PUBLISHED UNDER THE PATENT COOPERATION TREATY (PCT)

(19) World Intellectual Property Organization
International Bureau

(43) International Publication Date
17 July 2008 (17.07.2008)

PCT

(10) International Publication Number
WO 2008/084205 A1

(51) International Patent Classification:
H01Q 1/24 (2006.01) *H01Q 11/08* (2006.01)

(21) International Application Number:
PCT/GB2008/000038

(22) International Filing Date: 7 January 2008 (07.01.2008)

(25) Filing Language: English

(26) Publication Language: English

(30) Priority Data:
0700276.9 8 January 2007 (08.01.2007) GB

(71) Applicant *(for all designated States except US)*: **SARANTEL LIMITED** [GB/GB]; Unit 2, Wendel Point, Ryle Drive, Park Farm South, Wellingborough NN8 6AQ (GB).

(72) Inventor; and

(75) Inventor/Applicant *(for US only)*: **LEISTEN, Oliver, Paul** [GB/GB]; Hillside, Brick Kiln Road, Raunds, Northamptonshire NN9 6HY (GB).

(74) Agents: **BLATCHFORD, William, Michael** et al.; WITHERS & ROGERS LLP, Goldings House, 2 Hays Lane, London SE1 2HW (GB).

(81) Designated States *(unless otherwise indicated, for every kind of national protection available)*: AE, AG, AL, AM, AO, AT, AU, AZ, BA, BB, BG, BH, BR, BW, BY, BZ, CA, CH, CN, CO, CR, CU, CZ, DE, DK, DM, DO, DZ, EC, EE, EG, ES, FI, GB, GD, GE, GH, GM, GT, HN, HR, HU, ID, IL, IN, IS, JP, KE, KG, KM, KN, KP, KR, KZ, LA, LC, LK, LR, LS, LT, LU, LY, MA, MD, ME, MG, MK, MN, MW, MX, MY, MZ, NA, NG, NI, NO, NZ, OM, PG, PH, PL, PT, RO, RS, RU, SC, SD, SE, SG, SK, SL, SM, SV, SY, TJ, TM, TN, TR, TT, TZ, UA, UG, US, UZ, VC, VN, ZA, ZM, ZW.

(84) Designated States *(unless otherwise indicated, for every kind of regional protection available)*: ARIPO (BW, GH, GM, KE, LS, MW, MZ, NA, SD, SL, SZ, TZ, UG, ZM, ZW), Eurasian (AM, AZ, BY, KG, KZ, MD, RU, TJ, TM), European (AT, BE, BG, CH, CY, CZ, DE, DK, EE, ES, FI, FR, GB, GR, HR, HU, IE, IS, IT, LT, LU, LV, MC, MT, NL, NO, PL, PT, RO, SE, SI, SK, TR), OAPI (BF, BJ, CF, CG, CI, CM, GA, GN, GQ, GW, ML, MR, NE, SN, TD, TG).

Published:
— *with international search report*

(54) **Title:** A DIELECTRICALLY-LOADED ANTENNA

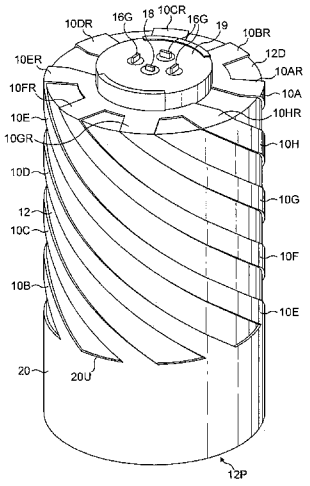

(57) **Abstract:** A dielectrically loaded multifilar helical antenna having an operating frequency in excess of 200MHz has an electrically insulative core with a relative dielectric constant greater than (5) occupying the major part of the interior volume defined by a three dimensional antenna element structure having, in one embodiment, eight coextensive helical tracks and, in another embodiment, six such tracks. The antennas are backfire or end fire antennas, all helical elements being phased so as to contribute to a circular polarisation resonance at the operating frequency.

WO 2008/084205 A1