Fig.1

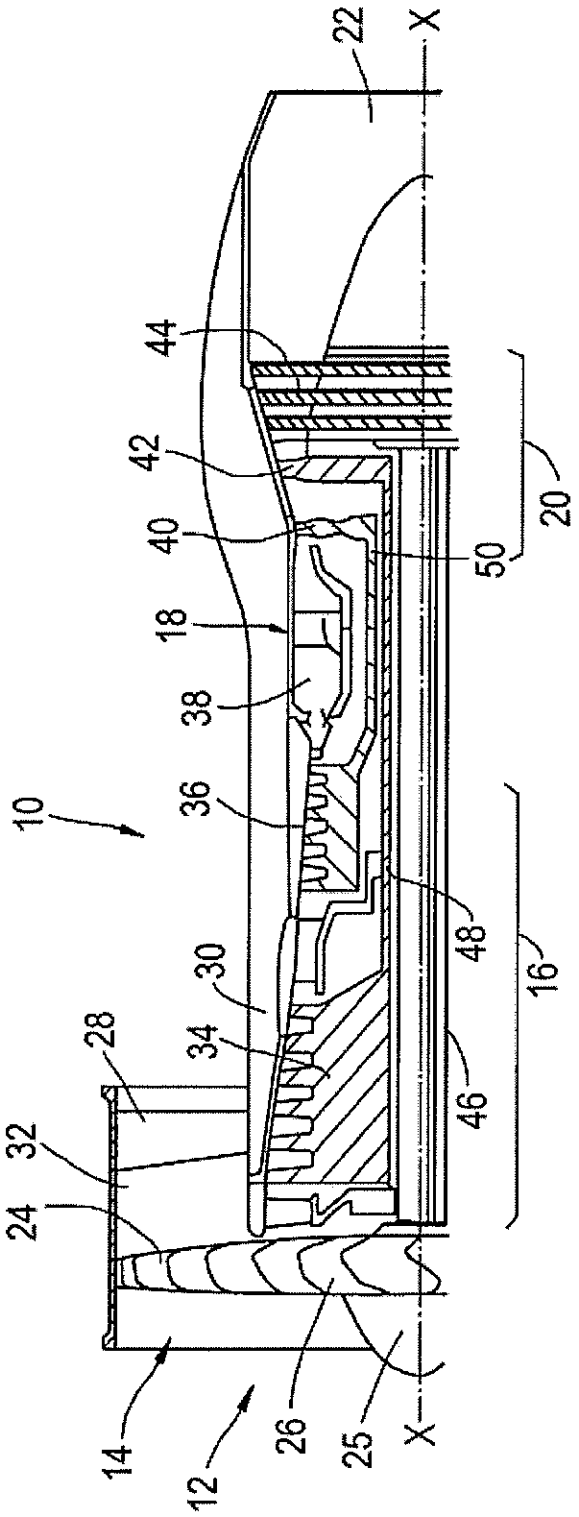

Fig.2

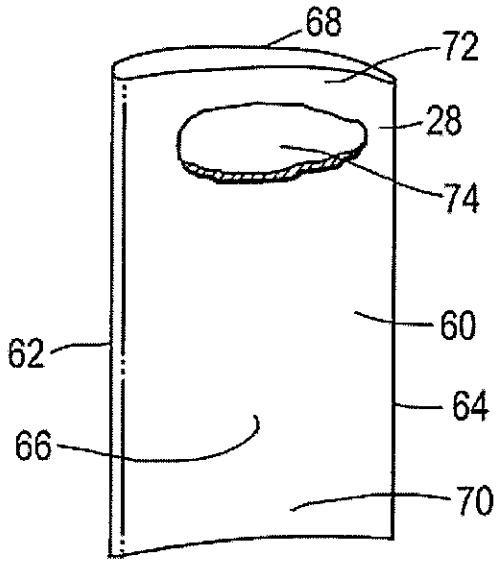
68
72
28
74
60
62
64
66
70

Fig.3

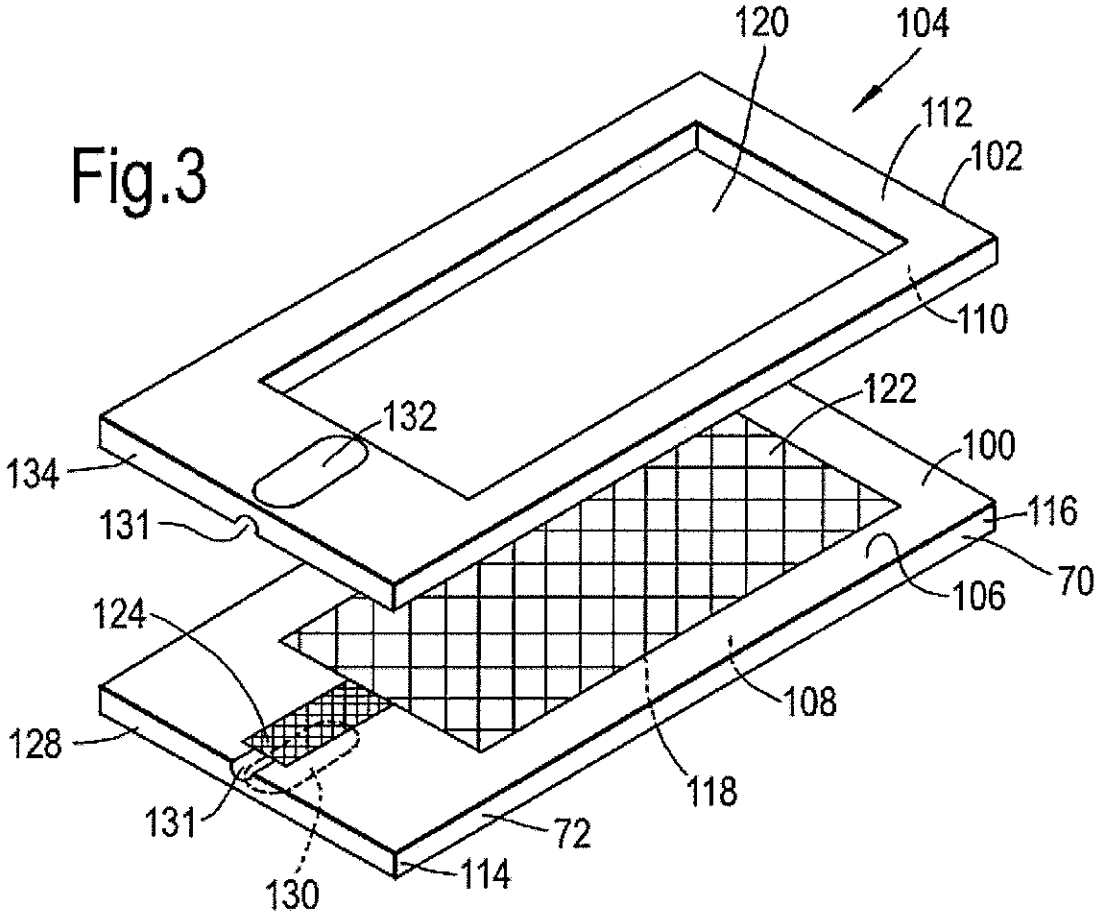
120
104
112
102
110
122
132
100
134
116
131
106
70
124
108
128
118
131
72
114
130

Fig.4

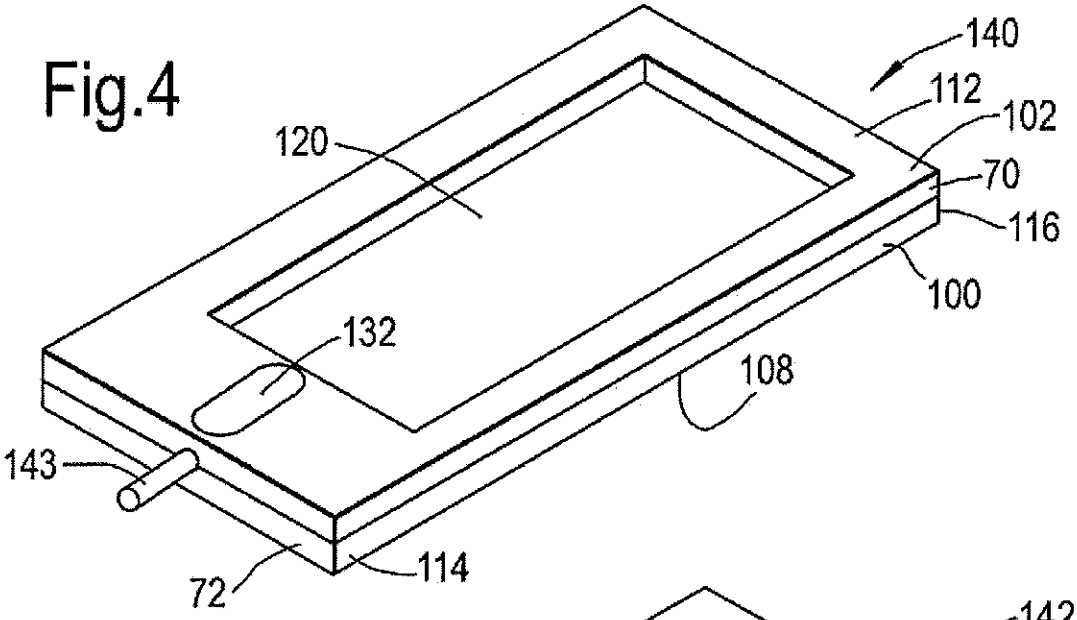

Fig.5

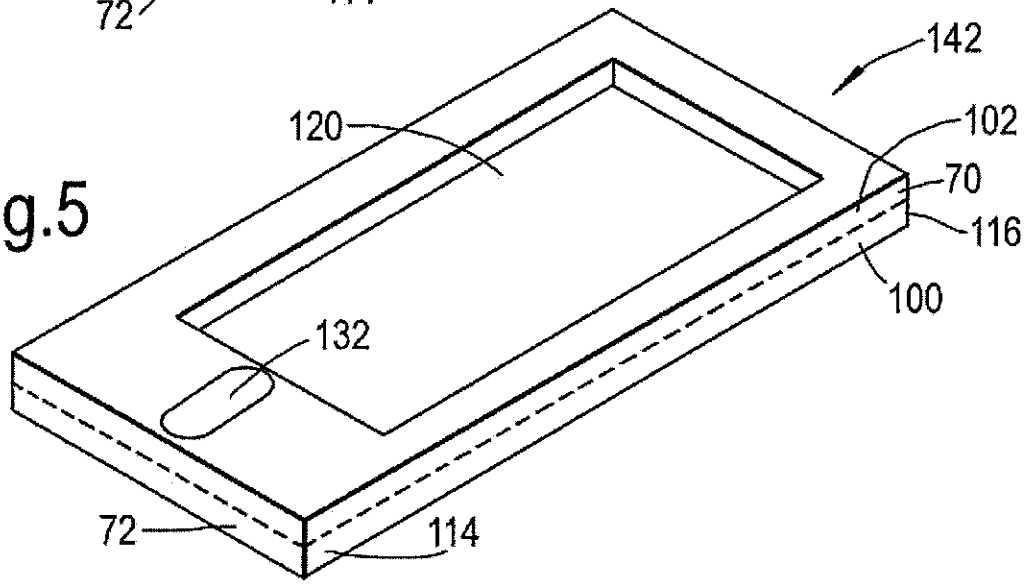

Fig.6

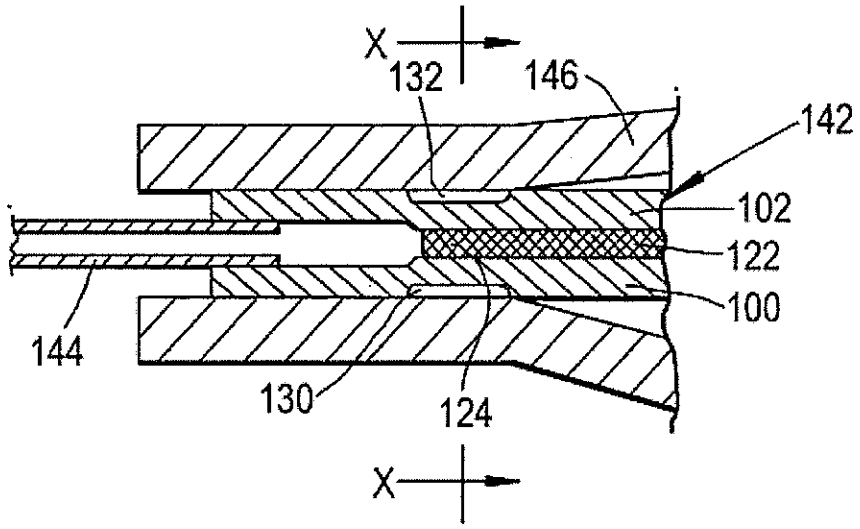

Fig. 7

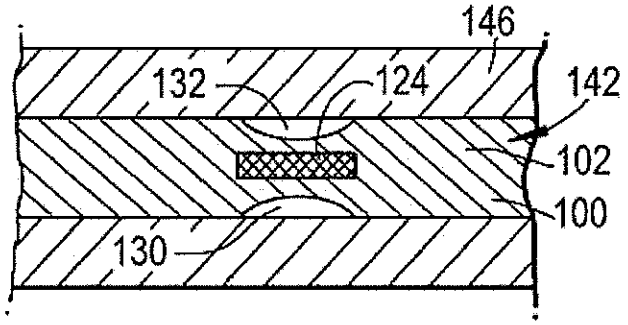

Fig.8

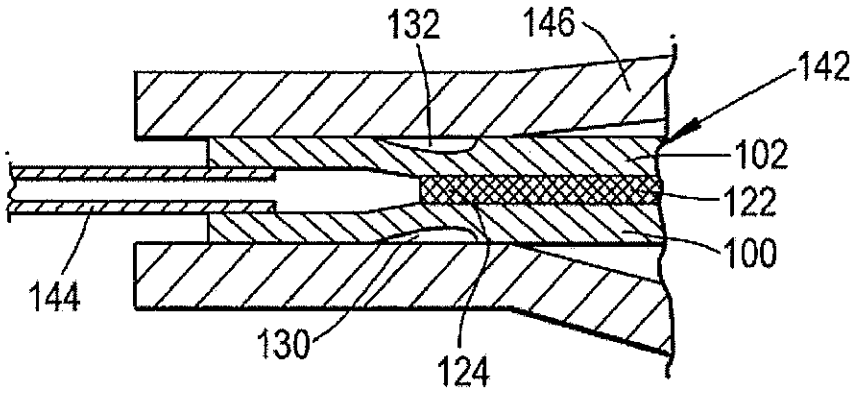

Fig.9

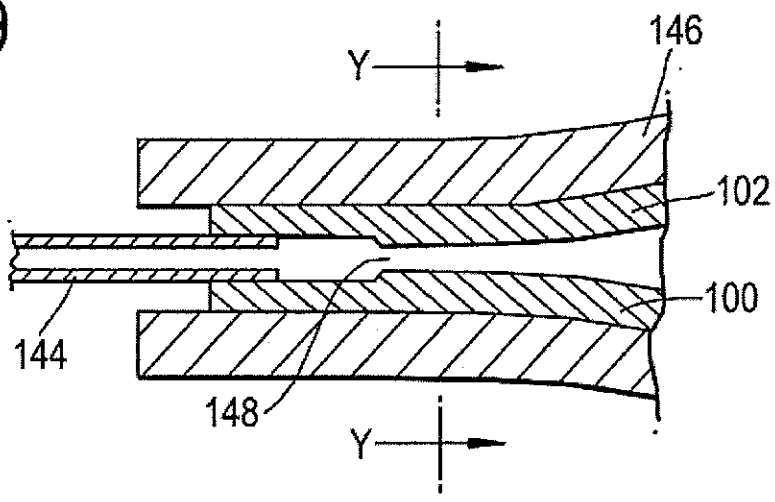

Fig.10

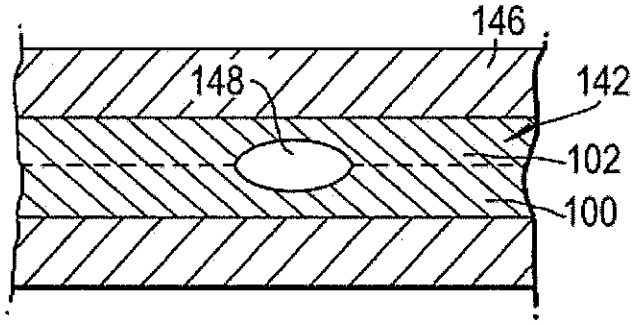

Fig.11

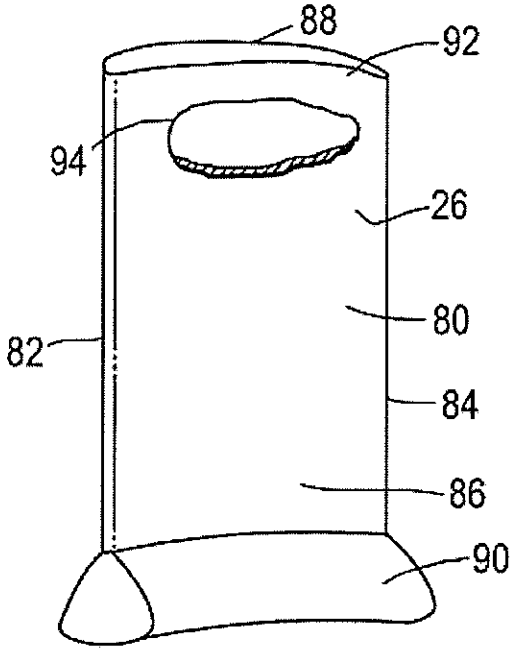

Fig.12

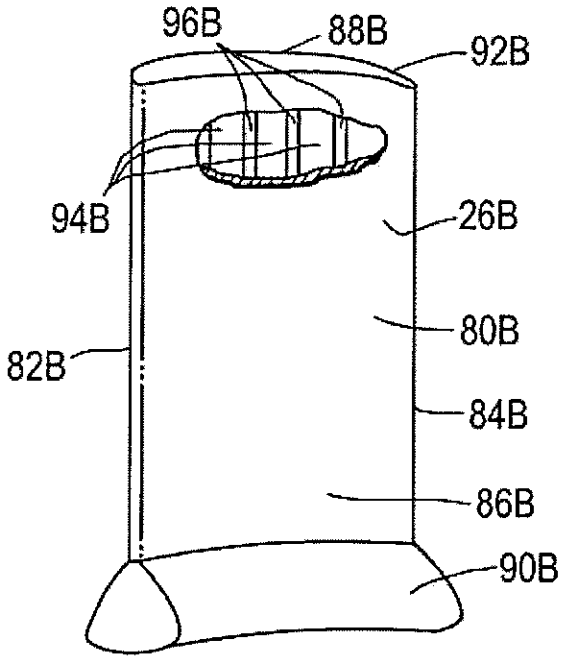
96B
88B
92B
94B
26B
80B
82B
84B
86B
90B

Fig.13

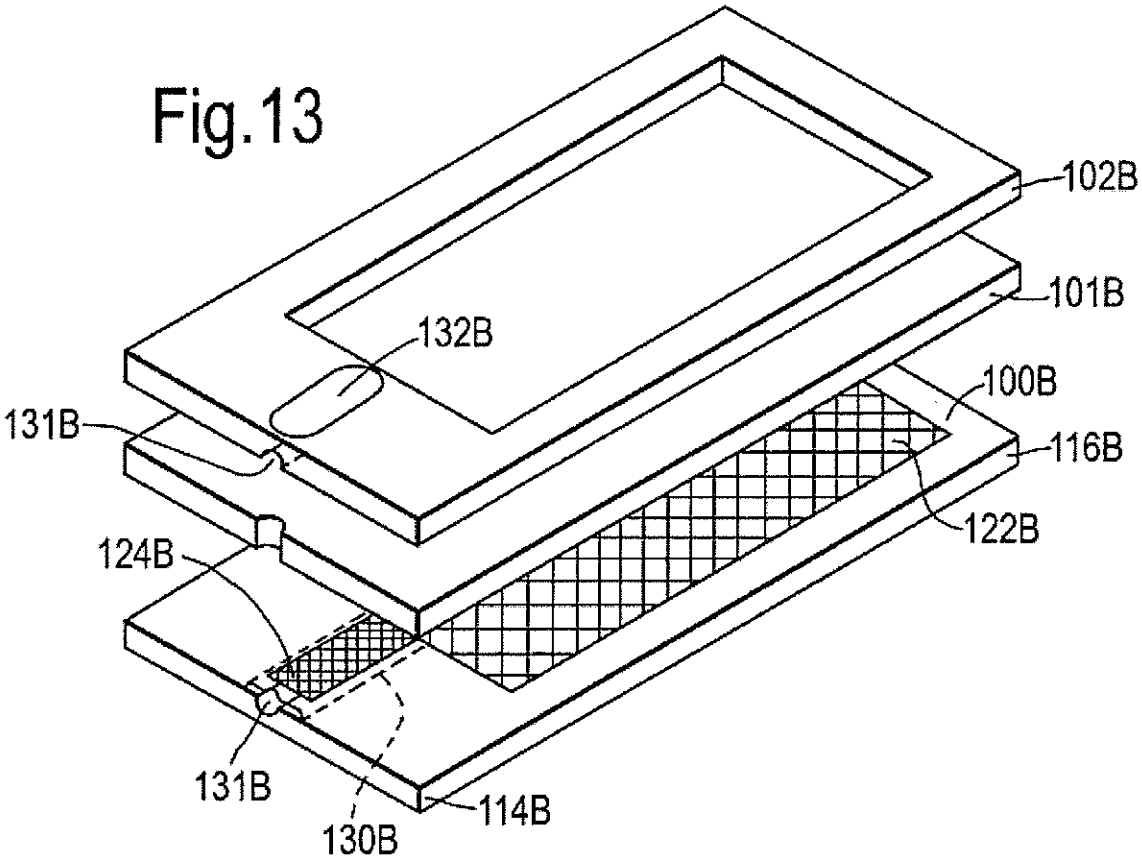
102B
101B
132B
100B
131B
116B
122B
124B
131B
114B
130B

Fig.14

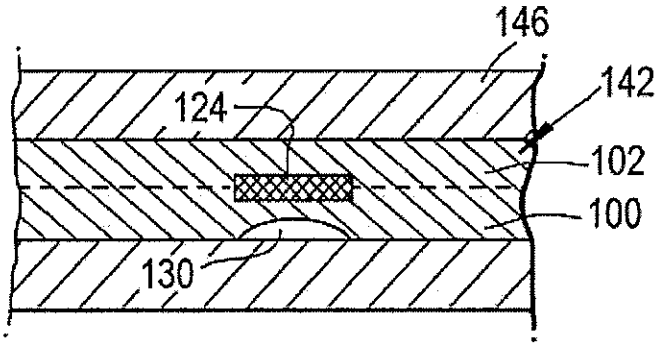

Fig.15

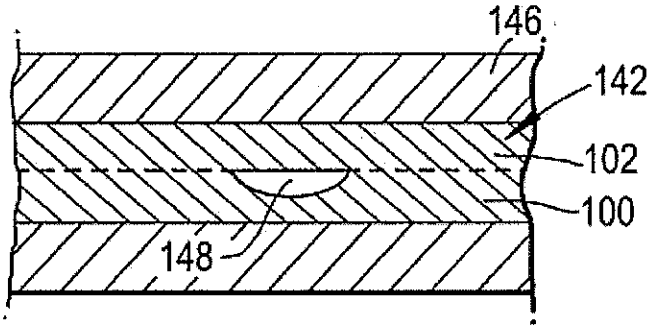

Fig.16

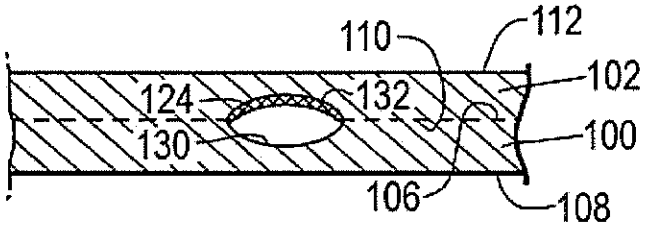

Fig.17

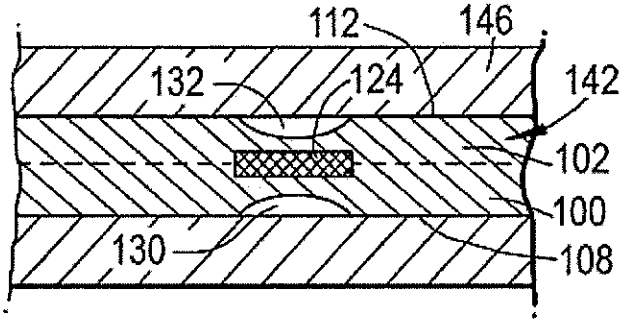

Fig.18

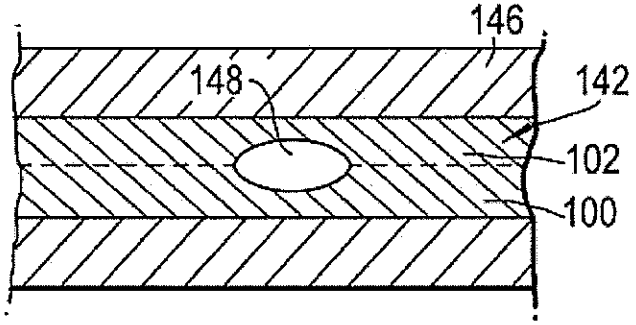

Fig.19

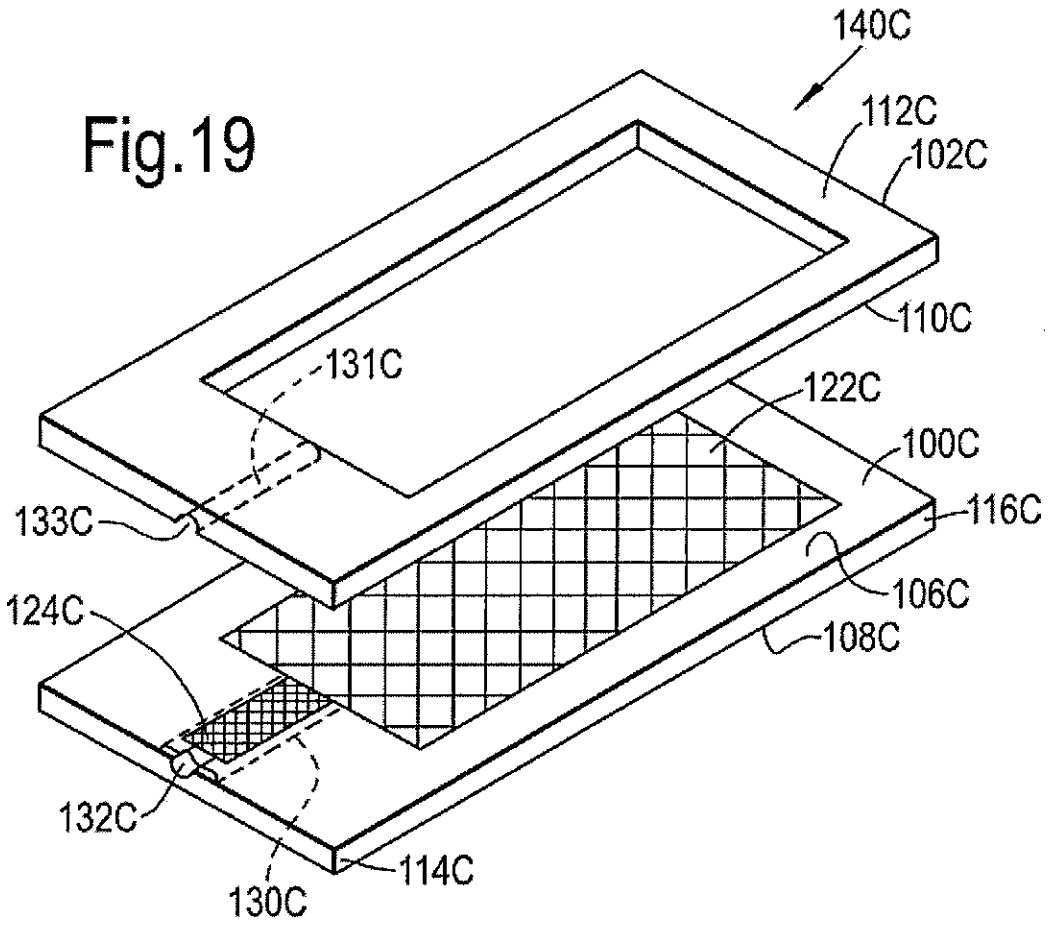

Fig.20

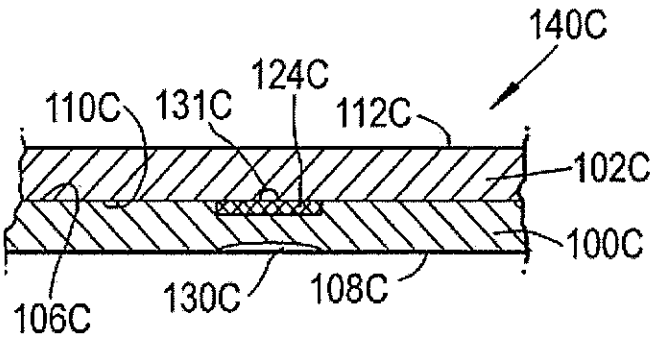

Fig.21

