


FIG. 1A

ROUTE A ↓ ROUTE B TO FORM 14′

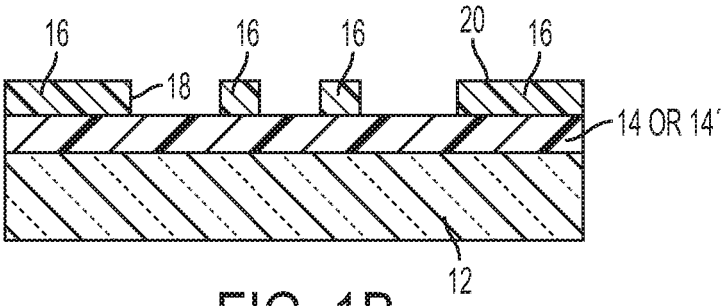


FIG. 1B

↓

TO FIG. 1C

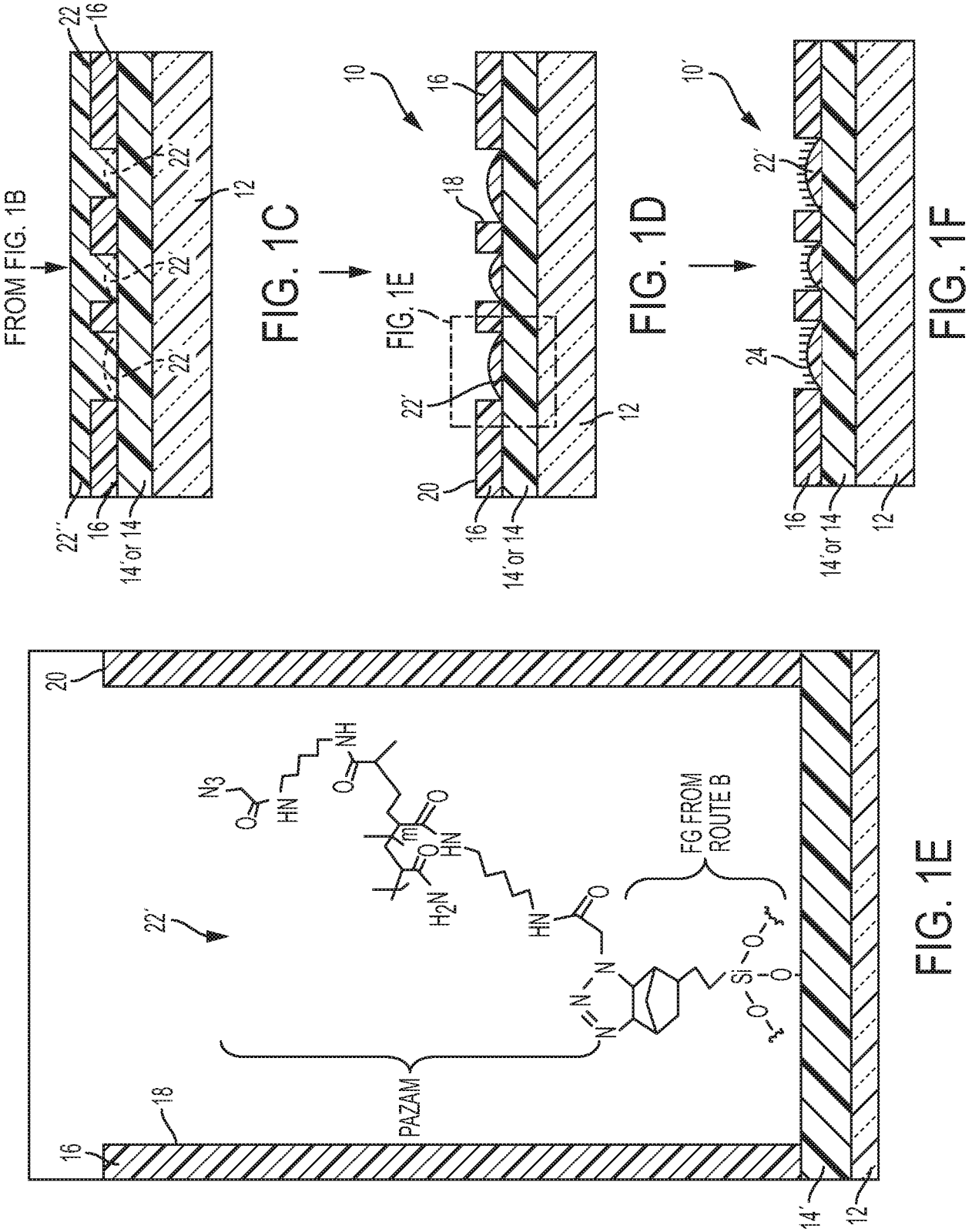
FROM FIG. 1B
22
16
22'
12
22''
16
14' or 14
FIG. 1C
10
16
18
22'
12
20
16
14' or 14
FIG. 1E
FIG. 1D
10'
22'
24
16
14' or 14
12
FIG. 1F
20
22'
N3
HN
NH
O
m
HN
H2N
HN
FG FROM ROUTE B
N
N
N
Si
O
O
O
PAZAM
18
16
14'
12
FIG. 1E

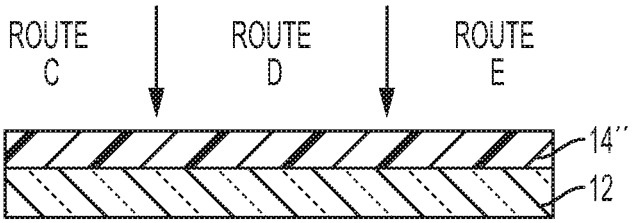


FIG. 2A

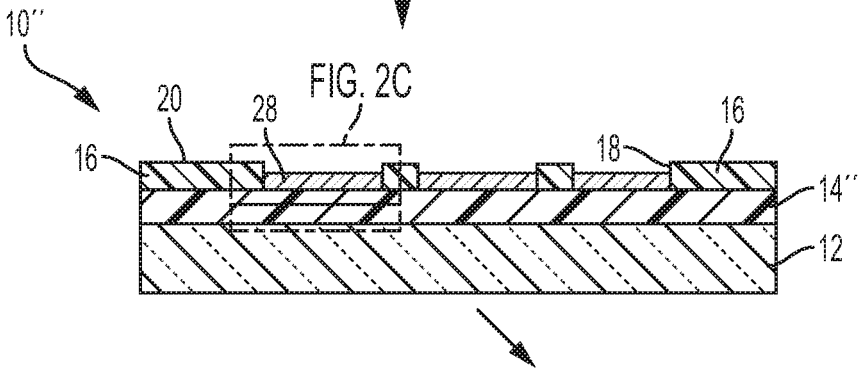


FIG. 2B

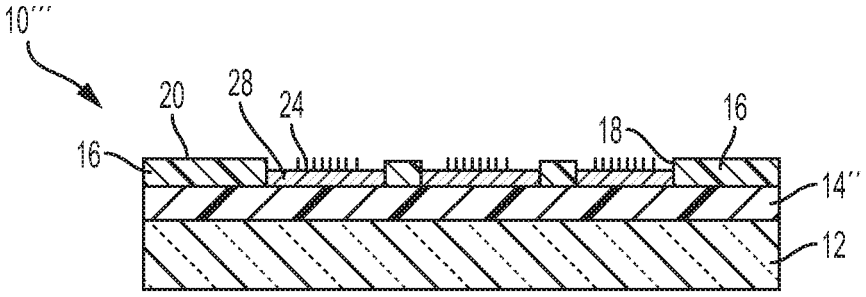


FIG. 2D

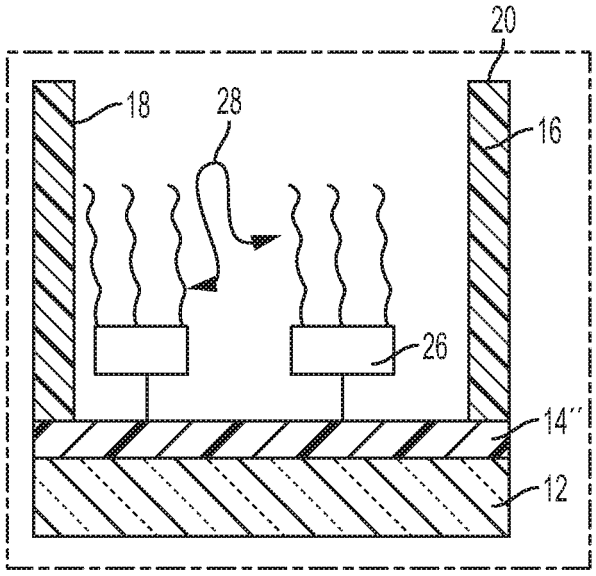


FIG. 2C