(12) INTERNATIONAL APPLICATION PUBLISHED UNDER THE PATENT COOPERATION TREATY (PCT)

(19) World Intellectual Property Organization
International Bureau

(43) International Publication Date
16 December 2010 (16.12.2010)

PCT

(10) International Publication Number
WO 2010/144555 A3

(51) International Patent Classification:
H05H 1/46 (2006.01) *H01L 21/205* (2006.01)
H01L 21/3065 (2006.01)

(21) International Application Number:
PCT/US2010/037942

(22) International Filing Date:
9 June 2010 (09.06.2010)

(25) Filing Language: English

(26) Publication Language: English

(30) Priority Data:
61/186,710 12 June 2009 (12.06.2009) US

(71) Applicant *(for all designated States except US)*: **LAM RESEARCH CORPORATION** [US/US]; 4650 Cushing Parkway, Fremont, California 94538 (US).

(72) Inventors; and

(75) Inventors/Applicants *(for US only)*: **LONG, Maolin** [CN/US]; c/o Lam Research Corporation, Legal Department, 4650 Cushing Parkway, Fremont, California 94538 (US). **JAFARIAN-TEHRANI, Seyed Jafar** [US/US]; c/o Lam Research Corporation, Legal Department, 4650 Cushing Parkway, Fremont, California 94538 (US).

(74) Agent: **NGUYEN, Joseph A.**; PO Box 700640, San Jose, California 95170 (US).

(81) Designated States *(unless otherwise indicated, for every kind of national protection available)*: AE, AG, AL, AM, AO, AT, AU, AZ, BA, BB, BG, BH, BR, BW, BY, BZ, CA, CH, CL, CN, CO, CR, CU, CZ, DE, DK, DM, DO, DZ, EC, EE, EG, ES, FI, GB, GD, GE, GH, GM, GT, HN, HR, HU, ID, IL, IN, IS, JP, KE, KG, KM, KN, KP, KR, KZ, LA, LC, LK, LR, LS, LT, LU, LY, MA, MD, ME, MG, MK, MN, MW, MX, MY, MZ, NA, NG, NI, NO, NZ, OM, PE, PG, PH, PL, PT, RO, RS, RU, SC, SD, SE, SG, SK, SL, SM, ST, SV, SY, TH, TJ, TM, TN, TR, TT, TZ, UA, UG, US, UZ, VC, VN, ZA, ZM, ZW.

(84) Designated States *(unless otherwise indicated, for every kind of regional protection available)*: ARIPO (BW, GH, GM, KE, LR, LS, MW, MZ, NA, SD, SL, SZ, TZ, UG, ZM, ZW), Eurasian (AM, AZ, BY, KG, KZ, MD, RU, TJ, TM), European (AL, AT, BE, BG, CH, CY, CZ, DE, DK, EE, ES, FI, FR, GB, GR, HR, HU, IE, IS, IT, LT, LU, LV, MC, MK, MT, NL, NO, PL, PT, RO, SE, SI, SK, SM, TR), OAPI (BF, BJ, CF, CG, CI, CM, GA, GN, GQ, GW, ML, MR, NE, SN, TD, TG).

Published:

— *with international search report (Art. 21(3))*

— *before the expiration of the time limit for amending the claims and to be republished in the event of receipt of amendments (Rule 48.2(h))*

[Continued on next page]

(54) **Title**: ADJUSTING CURRENT RATIOS IN INDUCTIVELY COUPLED PLASMA PROCESSING SYSTEMS

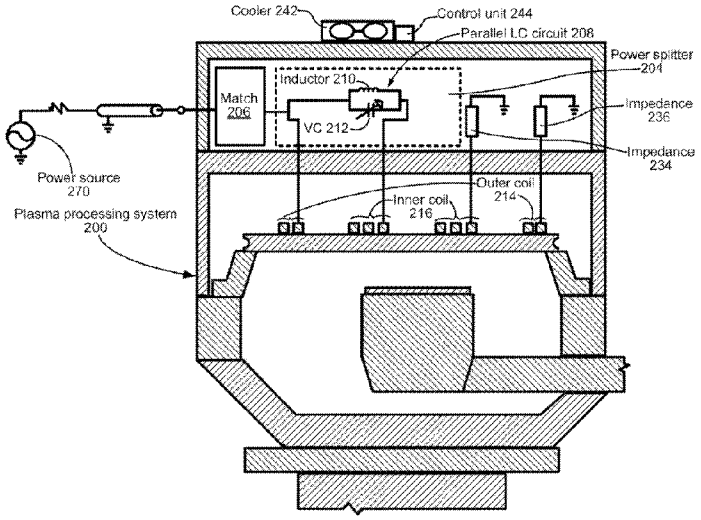

FIG. 2

(57) **Abstract**: A plasma processing system for generating plasma to process at least a wafer. The plasma processing system may include a first coil for conducting a first current for sustaining at least a first portion of the plasma. The plasma processing system may also include a second coil for conducting a second current for sustaining at least a second portion of the plasma. The plasma processing system may also include a power source for powering the first current and the second current. The plasma processing system may also include a parallel circuit for adjusting one of the amperage of the first current and the amperage of the second current. The parallel circuit may be electrically coupled between the power source and at least one of the first coil and the second coil. The parallel circuit may include an inductor and a variable capacitor electrically connected in parallel to each other.

WO 2010/144555 A3

(88) Date of publication of the international search report:
24 February 2011