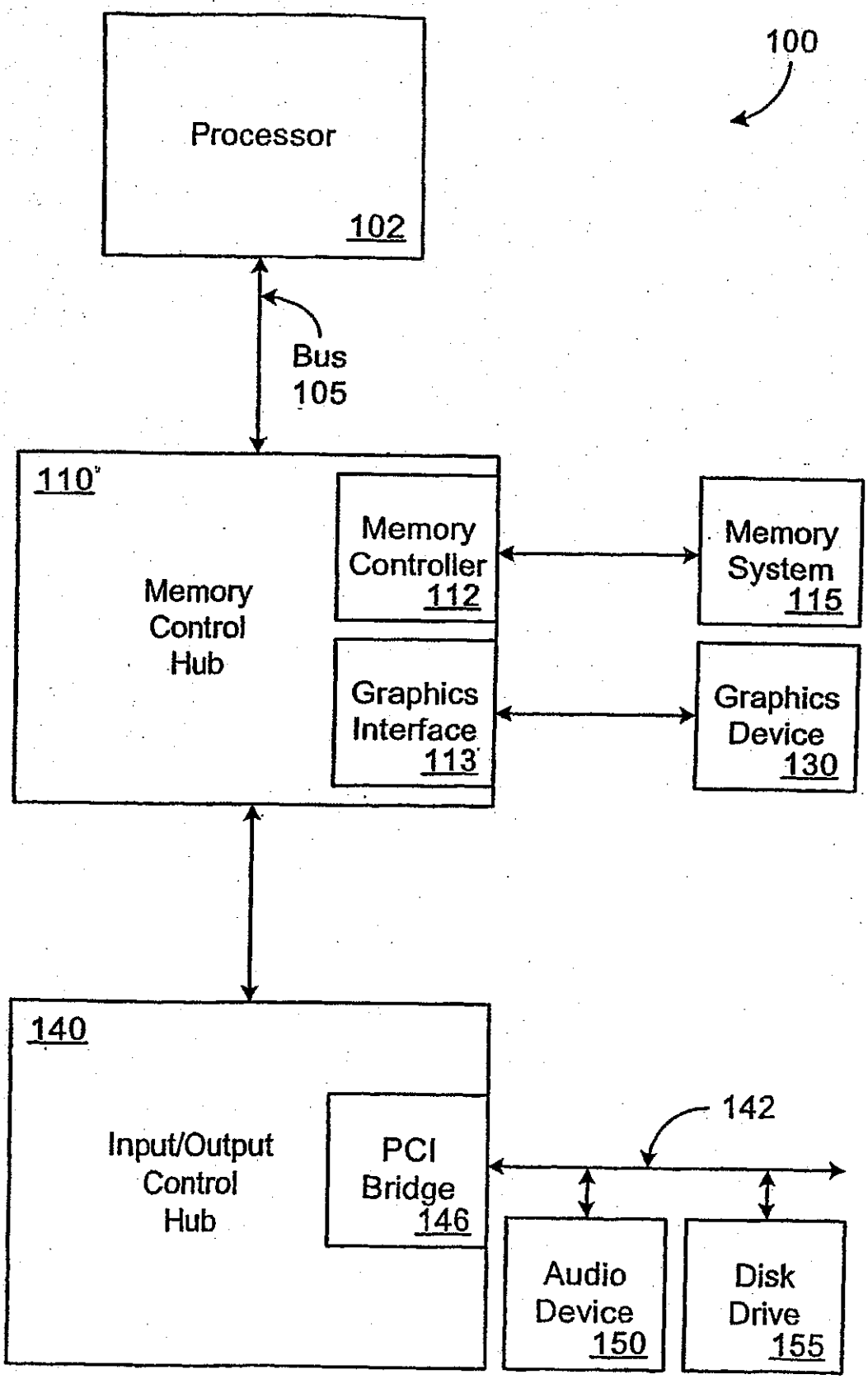
100
Processor
102
Bus
105
110
Memory
Control
Hub
Memory
Controller
112
Graphics
Interface
113
Memory
System
115
Graphics
Device
130
140
Input/Output
Control
Hub
PCI
Bridge
146
142
Audio
Device
150
Disk
Drive
155

FIG. 1

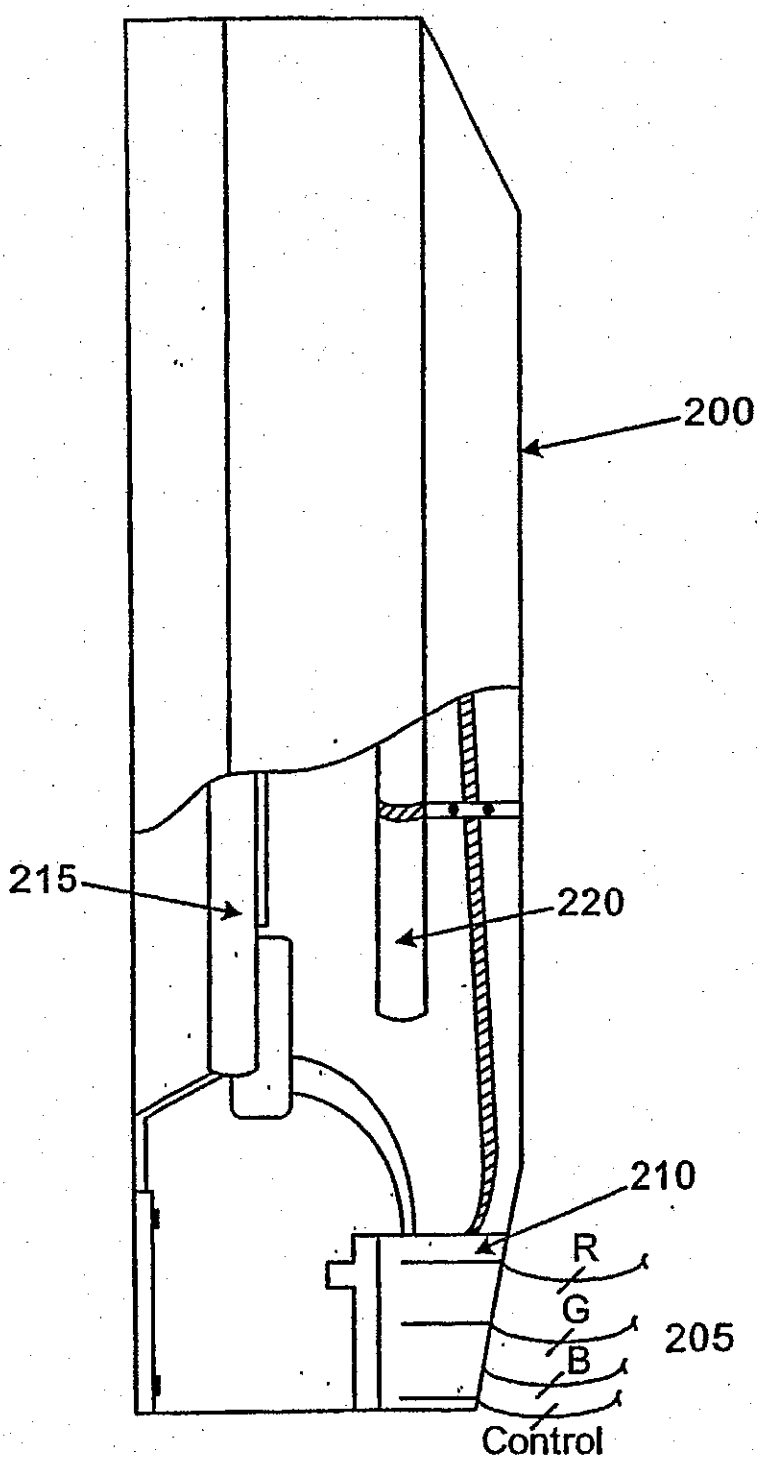

FIG. 2

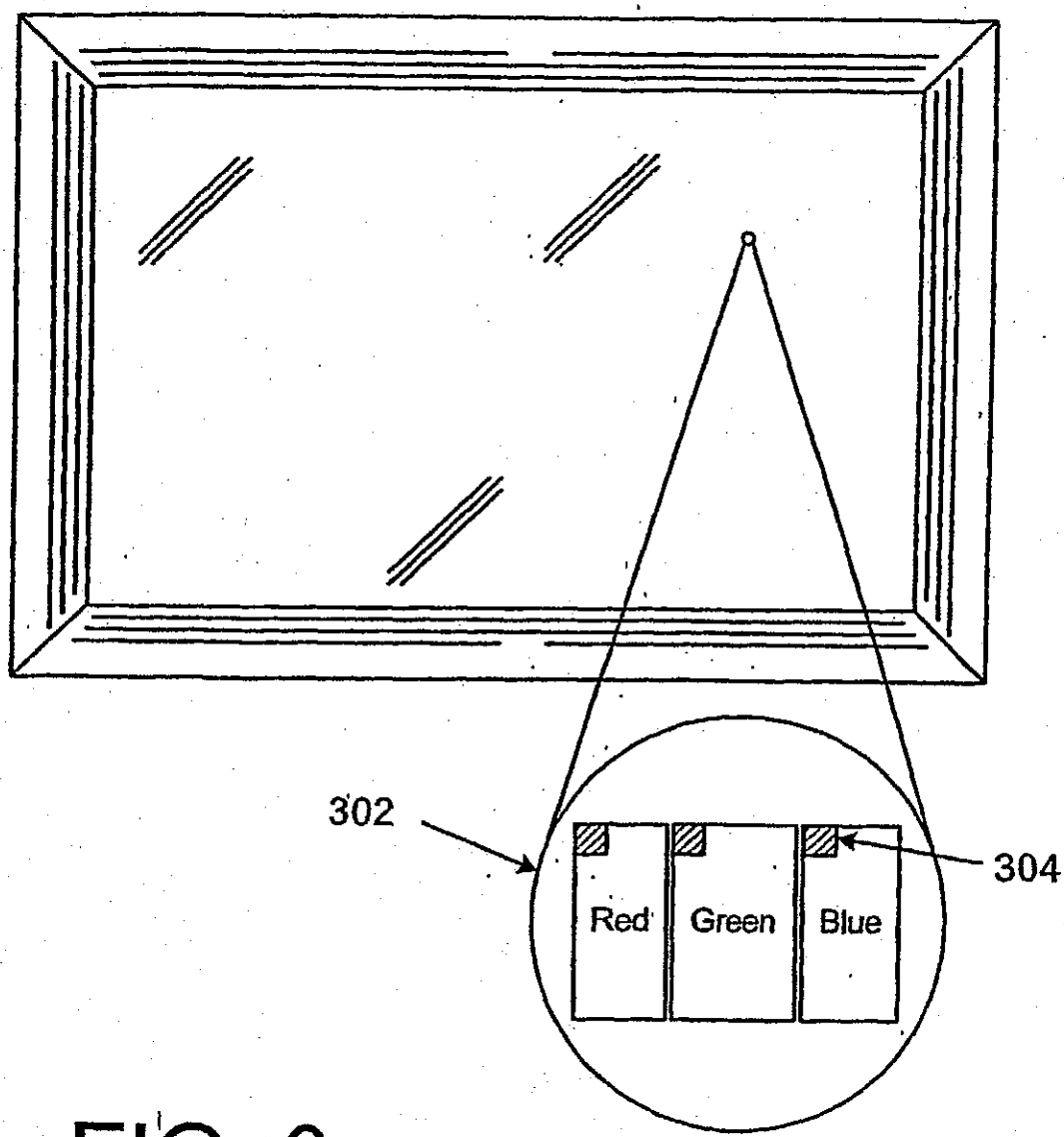

FIG. 3

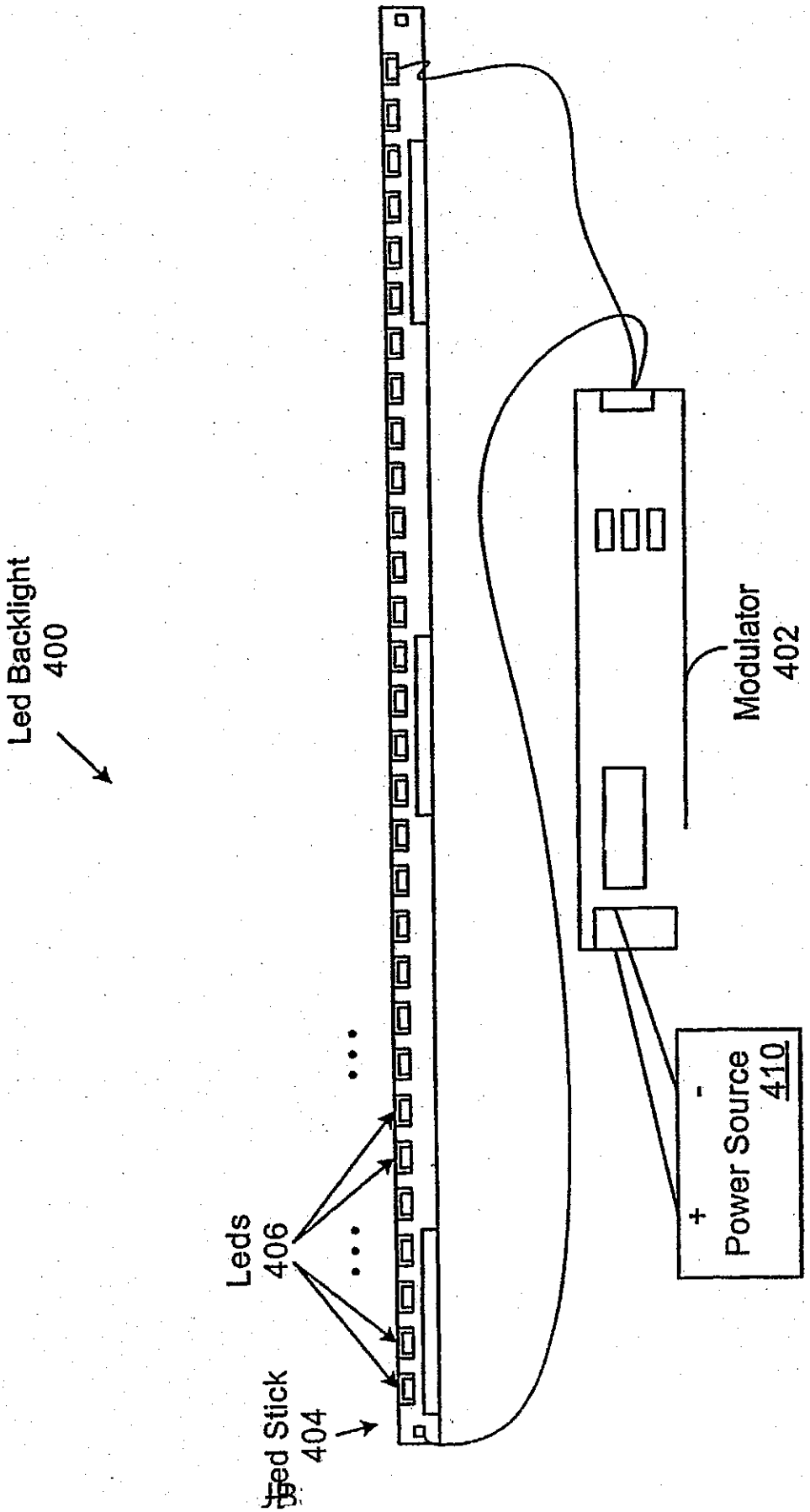
Led Backlight
400
Modulator
402
Leds
406
Led Stick
404
Power Source
410
-
+

FIG. 4

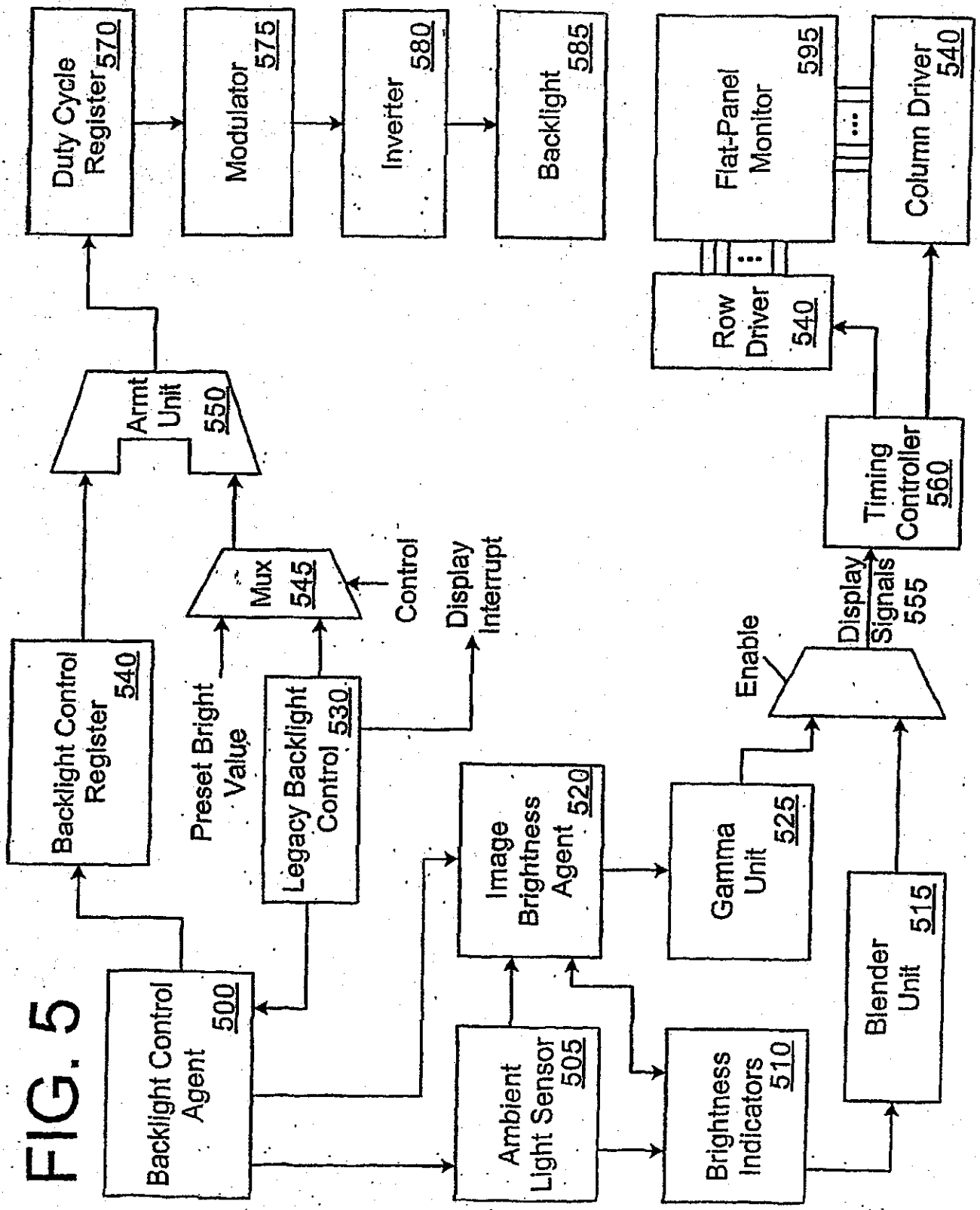
Backlight Control Agent 500
Ambient Light Sensor 505
Brightness Indicators 510
Blender Unit 515
Image Brightness Agent 520
Gamma Unit 525
Legacy Backlight Control 530
Backlight Control Register 540
Mux 545
Armt Unit 550
Timing Controller 560
Display Signals 555
Enable
Preset Bright Value
Control
Display Interrupt
Duty Cycle Register 570
Modulator 575
Inverter 580
Backlight 585
Flat-Panel Monitor 595
Row Driver 540
Column Driver 540

FIG. 5

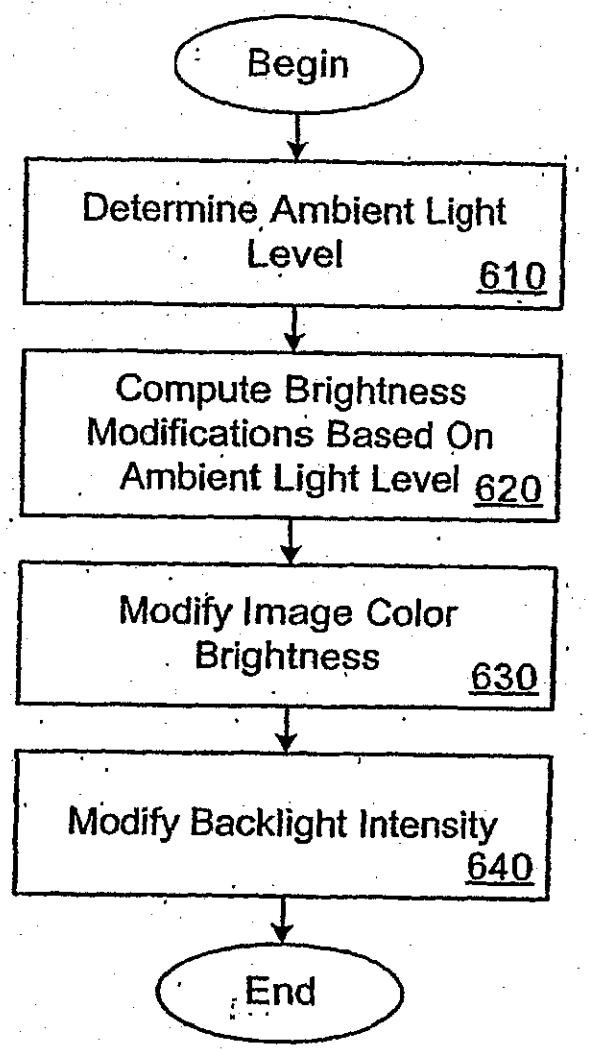
Begin
Determine Ambient Light Level
610
Compute Brightness Modifications Based On Ambient Light Level
620
Modify Image Color Brightness
630
Modify Backlight Intensity
640
End

FIG. 6

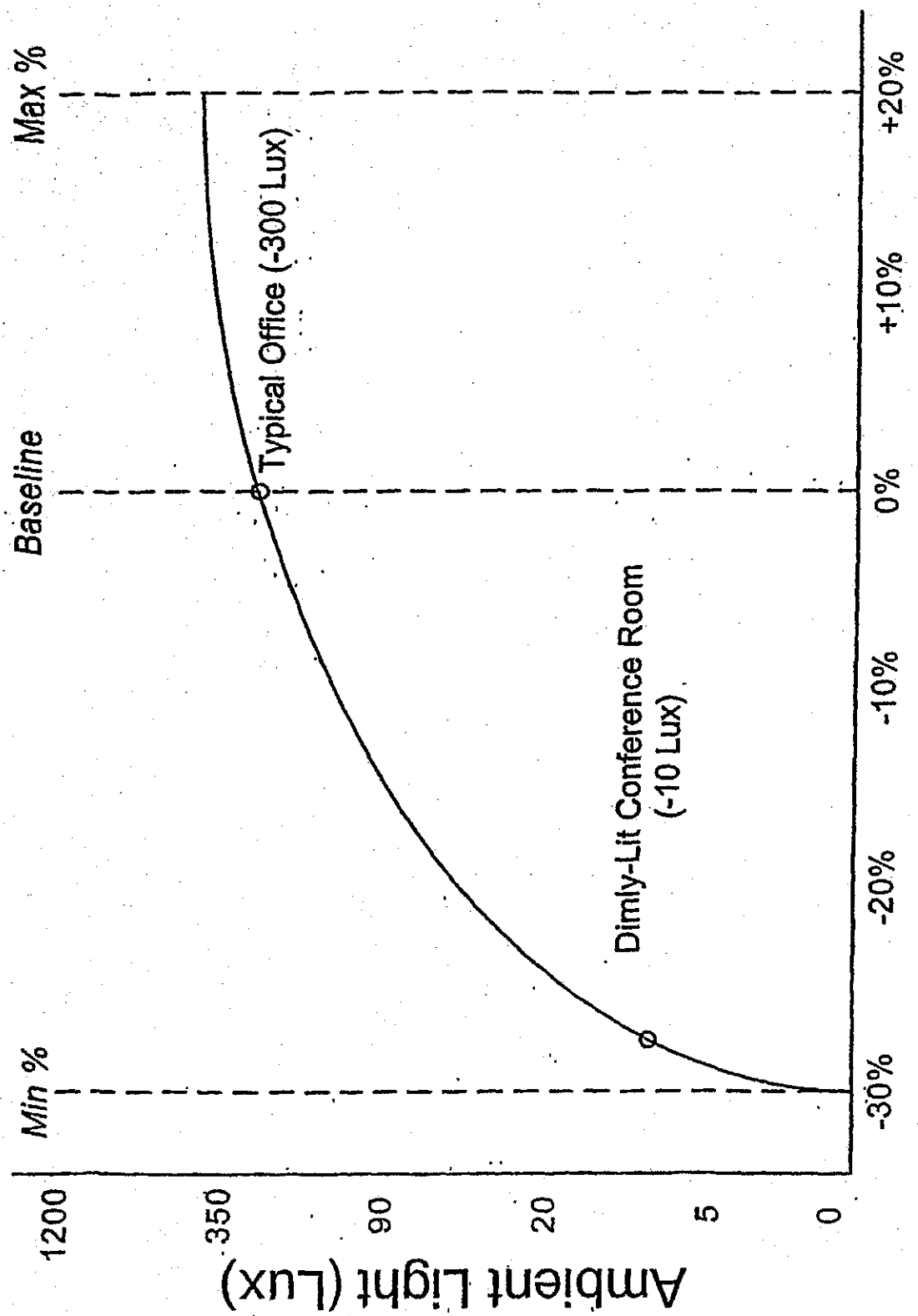
Max %
Baseline
Min %
Typical Office (-300 Lux)
Dimly-Lit Conference Room
(-10 Lux)
1200
350
90
20
5
0
Ambient Light (Lux)
+20%
+10%
0%
-10%
-20%
-30%
Backlight Adjust

FIG. 7

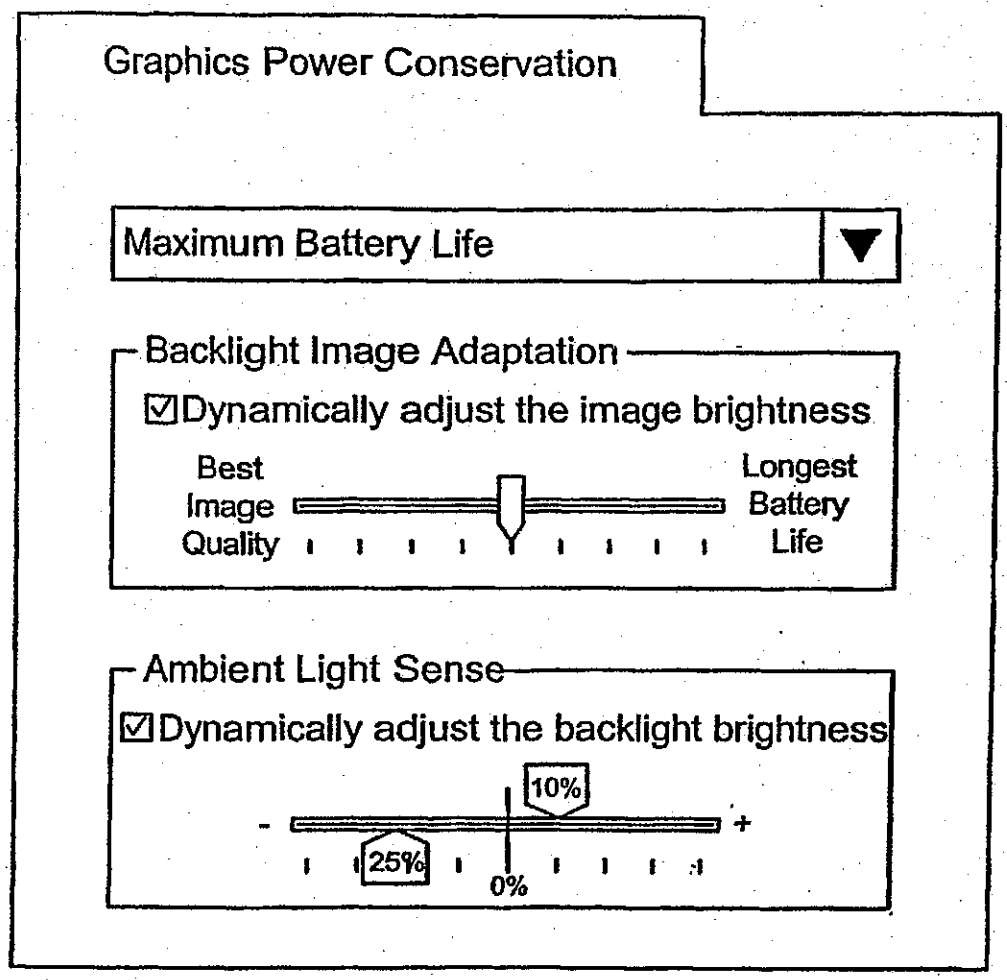
Graphics Power Conservation
Maximum Battery Life
Backlight Image Adaptation
☑Dynamically adjust the image brightness
Best Image Quality
Longest Battery Life
Ambient Light Sense
☑Dynamically adjust the backlight brightness
10%
-
+
25%
0%

FIG. 8