(12) INTERNATIONAL APPLICATION PUBLISHED UNDER THE PATENT COOPERATION TREATY (PCT)

(19) World Intellectual Property Organization
International Bureau

(43) International Publication Date
25 September 2025 (25.09.2025)

WIPO | PCT

(10) International Publication Number
WO 2025/198892 A1

(51) International Patent Classification:
C01B 3/04 (2006.01) *C01B 21/02* (2006.01)

(21) International Application Number:
PCT/US2025/019285

(22) International Filing Date:
11 March 2025 (11.03.2025)

(25) Filing Language: English

(26) Publication Language: English

(30) Priority Data:
63/568,258 21 March 2024 (21.03.2024) US

(71) Applicant: **AIR PRODUCTS AND CHEMICALS, INC.** [US/US]; 1940 Air Products Boulevard, Allentown, Pennsylvania 18106-5500 (US).

(72) Inventor: **D'AGOSTINI, Mark Daniel**; 2705 W. Gordon Street, Allentown, Pennsylvania 18104 (US).

(74) Agent: **DIAZ, Robert**; 1940 Air Products Boulevard, Allentown, Pennsylvania 18106-5500 (US).

(81) Designated States *(unless otherwise indicated, for every kind of national protection available)*: AE, AG, AL, AM, AO, AT, AU, AZ, BA, BB, BG, BH, BN, BR, BW, BY, BZ, CA, CH, CL, CN, CO, CR, CU, CV, CZ, DE, DJ, DK, DM, DO, DZ, EC, EE, EG, ES, FI, GB, GD, GE, GH, GM, GT, HN, HR, HU, ID, IL, IN, IQ, IR, IS, IT, JM, JO, JP, KE, KG, KH, KN, KP, KR, KW, KZ, LA, LC, LK, LR, LS, LU, LY, MA, MD, MG, MK, MN, MU, MW, MX, MY, MZ, NA, NG, NI, NO, NZ, OM, PA, PE, PG, PH, PL, PT, QA, RO, RS, RU, RW, SA, SC, SD, SE, SG, SK, SL, ST, SV, SY, TH, TJ, TM, TN, TR, TT, TZ, UA, UG, US, UY, UZ, VC, VN, WS, ZA, ZM, ZW.

(84) Designated States *(unless otherwise indicated, for every kind of regional protection available)*: ARIPO (BW, CV, GH, GM, KE, LR, LS, MW, MZ, NA, RW, SC, SD, SL, ST, SZ, TZ, UG, ZM, ZW), Eurasian (AM, AZ, BY, KG, KZ, RU, TJ, TM), European (AL, AT, BE, BG, CH, CY, CZ, DE, DK, EE, ES, FI, FR, GB, GR, HR, HU, IE, IS, IT, LT, LU, LV, MC, ME, MK, MT, NL, NO, PL, PT, RO, RS, SE, SI, SK, SM, TR), OAPI (BF, BJ, CF, CG, CI, CM, GA, GN, GQ, GW, KM, ML, MR, NE, SN, TD, TG).

(54) Title: SYSTEM AND METHOD FOR COMBUSTING AMMONIA

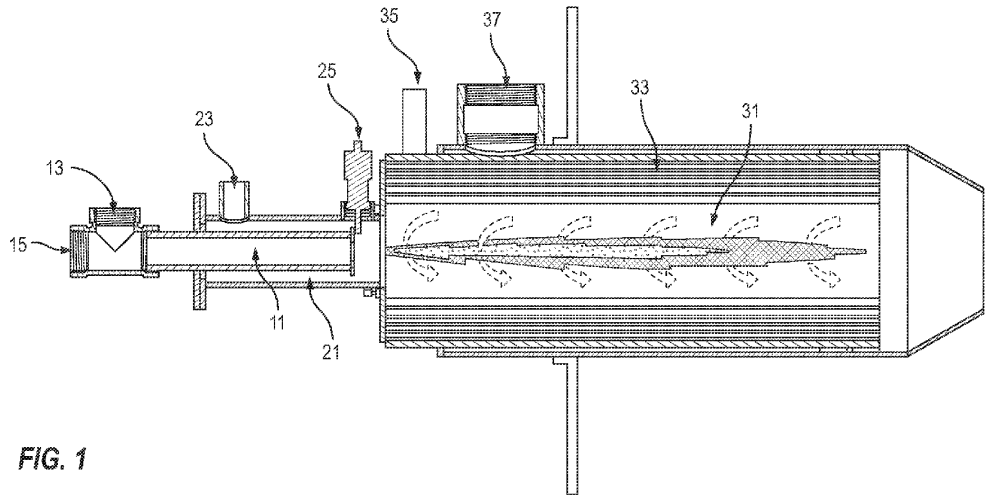

FIG. 1

(57) Abstract: A method comprising: heating a refractory surface in a combustion chamber to produce a heated refractory surface; contacting a stream comprising ammonia with the heated refractory surface to dissociate at least a portion of the ammonia to form nitrogen and hydrogen and produce an at least partially dissociated ammonia stream; and combusting the at least partially dissociated ammonia stream with a primary oxidant to produce an at least partially combusted ammonia stream.

WO 2025/198892 A1

[Continued on next page]

Published:
— *with international search report (Art. 21(3))*