(12) INTERNATIONAL APPLICATION PUBLISHED UNDER THE PATENT COOPERATION TREATY (PCT)

(19) World Intellectual Property Organization
International Bureau

(43) International Publication Date
30 July 2009 (30.07.2009)

PCT

(10) International Publication Number
WO 2009/092988 A1

(51) International Patent Classification:
B25B 5/12 (2006.01) *F16B 2/18* (2006.01)

(21) International Application Number:
PCT/GB2008/004133

(22) International Filing Date:
16 December 2008 (16.12.2008)

(25) Filing Language: English

(26) Publication Language: English

(30) Priority Data:
0801285.8 24 January 2008 (24.01.2008) GB

(71) Applicant *(for all designated States except US)*: **ROLLS-ROYCE PLC** [GB/GB]; 65 Buckingham Gate, London SW1E 6AT (GB).

(72) Inventor; and
(75) Inventor/Applicant *(for US only)*: **SWEETING, Paul, Philip** [GB/GB]; Rolls-Royce PLC, PO Box 31, Derby DE24 8BJ (GB).

(74) Agent: **GUNN, Michael, Alan**; ROLLS-ROYCE PLC, PO Box 31, Derby DE24 BJ (GB).

(81) Designated States *(unless otherwise indicated, for every kind of national protection available)*: AE, AG, AL, AM, AO, AT, AU, AZ, BA, BB, BG, BH, BR, BW, BY, BZ, CA, CH, CN, CO, CR, CU, CZ, DE, DK, DM, DO, DZ, EC, EE, EG, ES, FI, GB, GD, GE, GH, GM, GT, HN, HR, HU, ID, IL, IN, IS, JP, KE, KG, KM, KN, KP, KR, KZ, LA, LC, LK, LR, LS, LT, LU, LY, MA, MD, ME, MG, MK, MN, MW, MX, MY, MZ, NA, NG, NI, NO, NZ, OM, PG, PH, PL, PT, RO, RS, RU, SC, SD, SE, SG, SK, SL, SM, ST, SV, SY, TJ, TM, TN, TR, TT, TZ, UA, UG, US, UZ, VC, VN, ZA, ZM, ZW.

(84) Designated States *(unless otherwise indicated, for every kind of regional protection available)*: ARIPO (BW, GH, GM, KE, LS, MW, MZ, NA, SD, SL, SZ, TZ, UG, ZM, ZW), Eurasian (AM, AZ, BY, KG, KZ, MD, RU, TJ, TM), European (AT, BE, BG, CH, CY, CZ, DE, DK, EE, ES, FI, FR, GB, GR, HR, HU, IE, IS, IT, LT, LU, LV, MC, MT, NL, NO, PL, PT, RO, SE, SI, SK, TR), OAPI (BF, BJ, CF, CG, CI, CM, GA, GN, GQ, GW, ML, MR, NE, SN, TD, TG).

Declaration under Rule 4.17:
— *as to applicant's entitlement to apply for and be granted a patent (Rule 4.17(ii))*

Published:
— *with international search report*

(54) Title: A CLAMP

Fig.2.

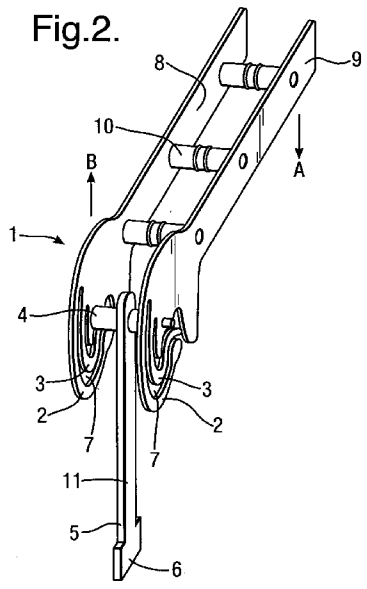

(57) Abstract: Over tightening of clamps (2) utilised to secure components and frames to machine tables and beds can cause significant problems with regard to damage to the bed or machine table as well as mis-location. By providing a clamp (1) having a pivot (4) and peripheral springs (2, 3) a limitation on clamping force (B) can be achieved. The clamp (1) is formed from sheet materials and incorporates an over centre pivot (4) such that the retainer (5) and in particular head (6) is brought into clamping engagement by the peripheral springs (2, 3) coming into engagement with surfaces about a slot in order to generate the clamping force (B). The peripheral springs (2, 3) come into engagement by rotation about the pivot 4 to provide a progressive clamping action.

WO 2009/092988 A1