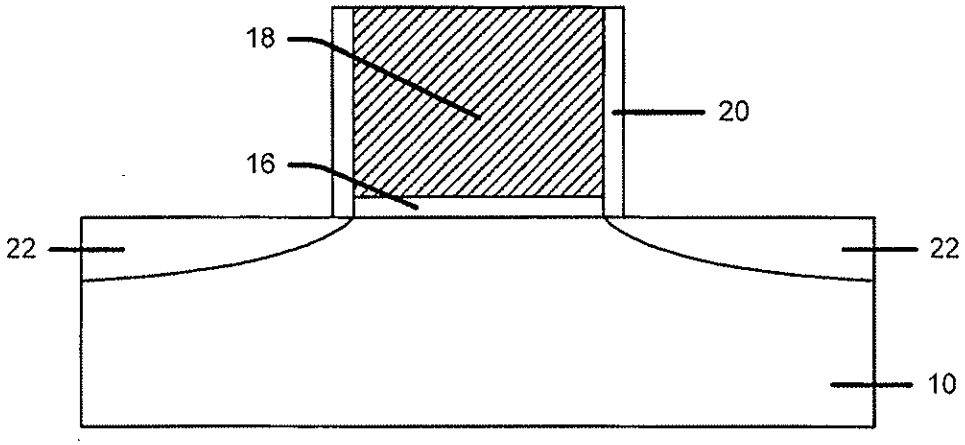

FIGURE 1

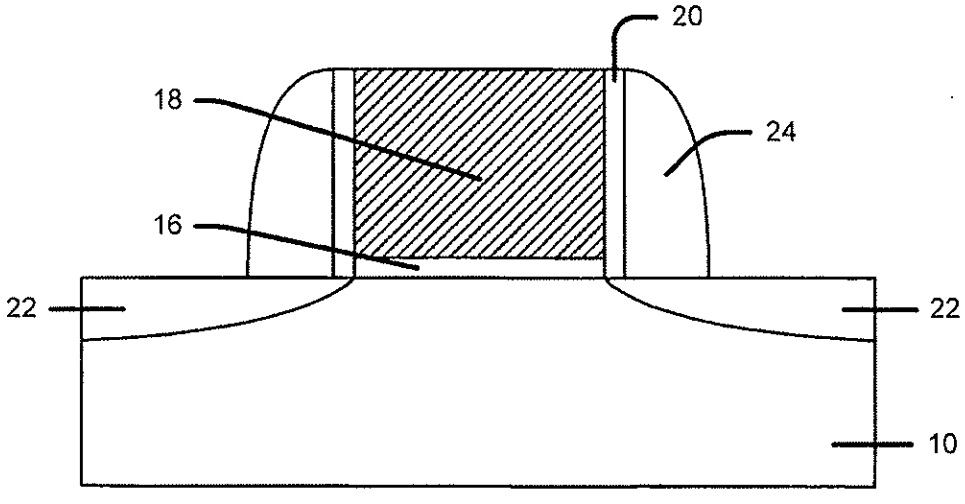

FIGURE 2

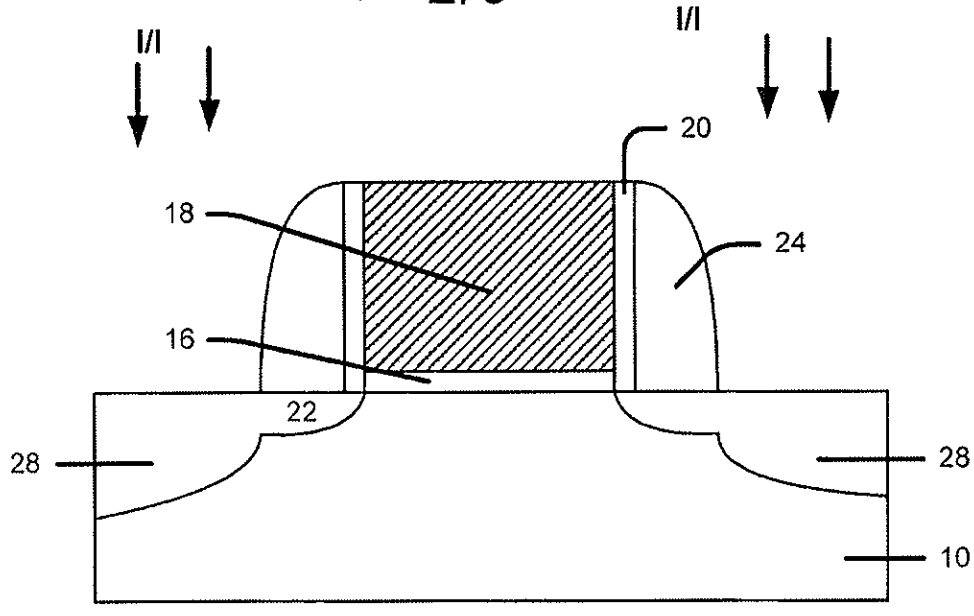

FIGURE 3A

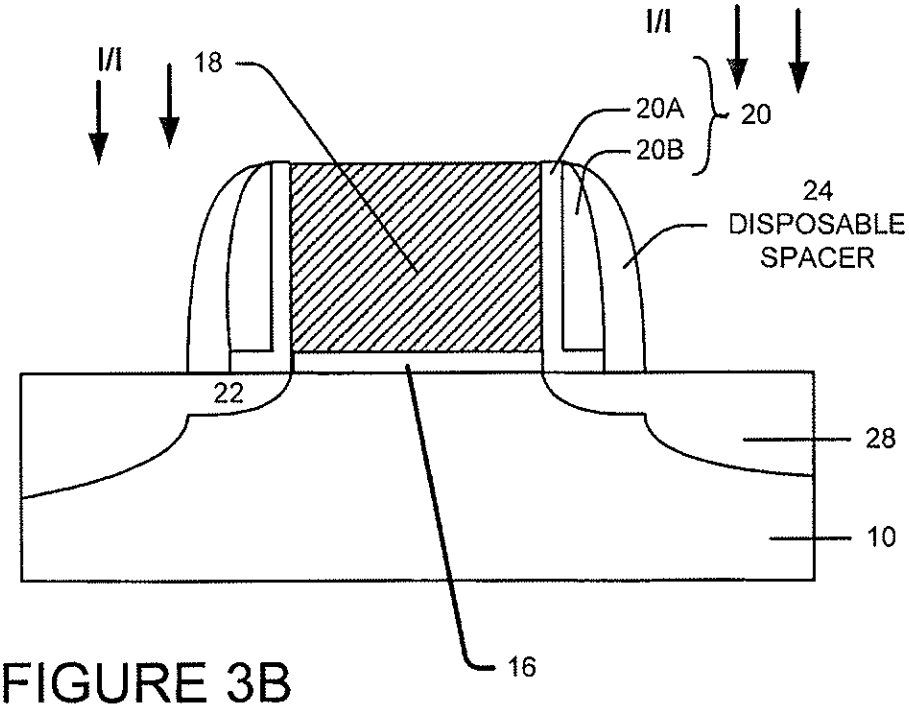

FIGURE 3B

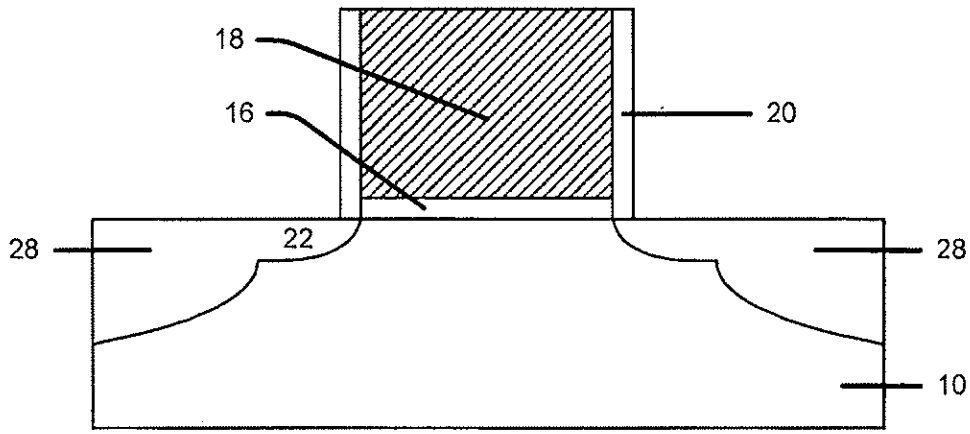

FIGURE 4

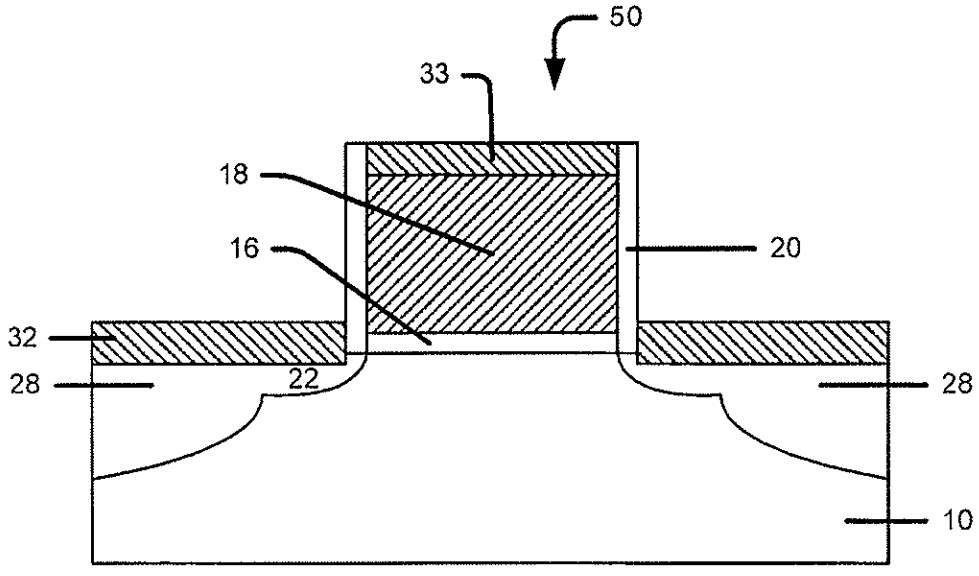

FIGURE 5

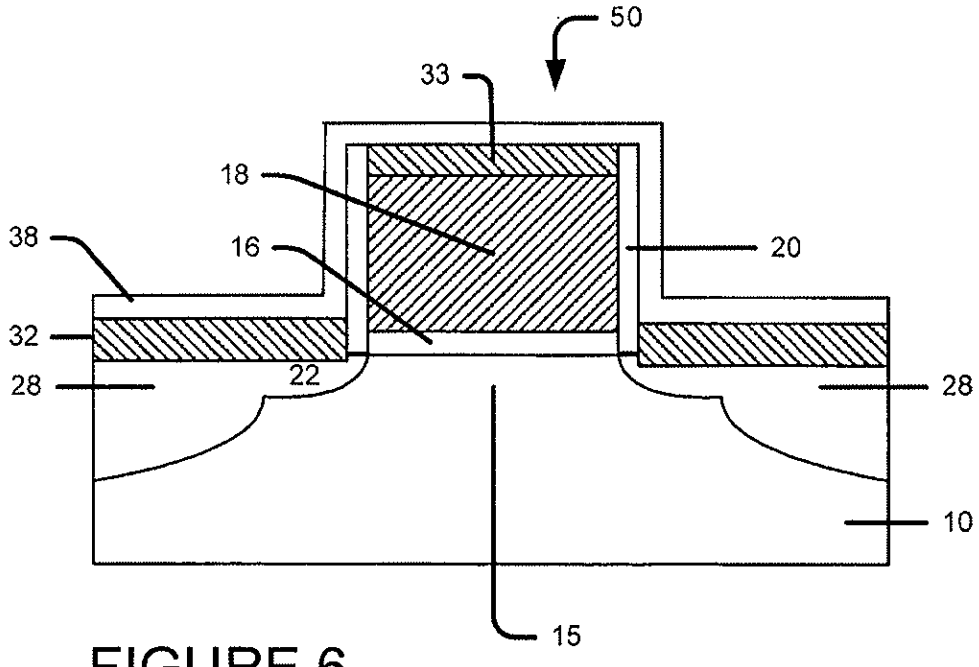

FIGURE 6

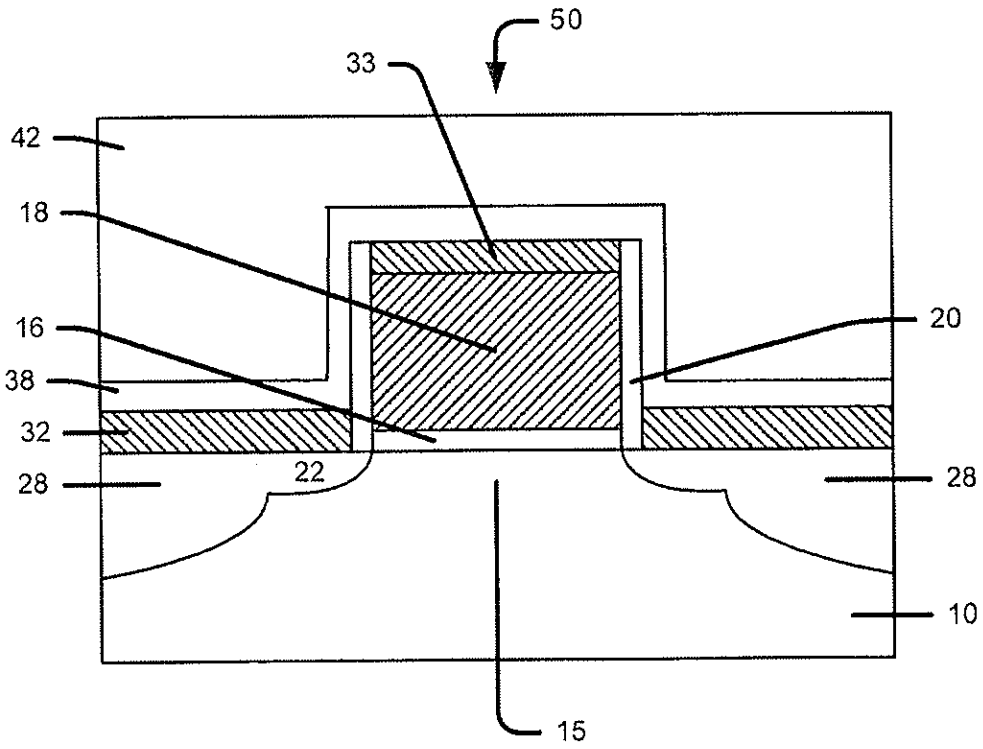

FIGURE 7A

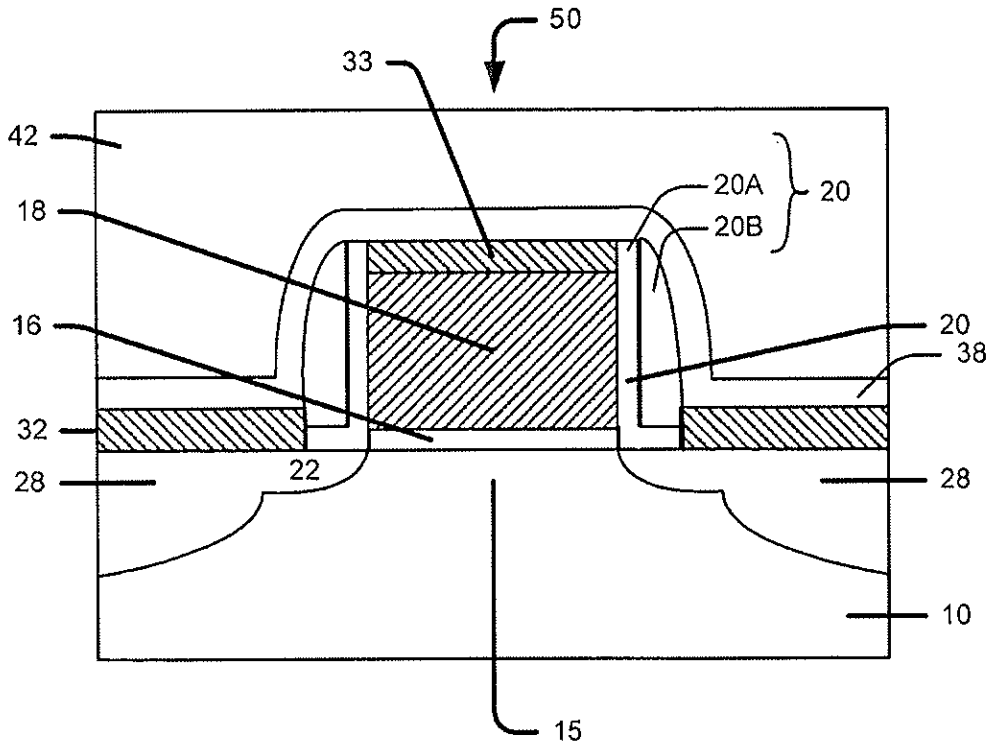

FIGURE 7B