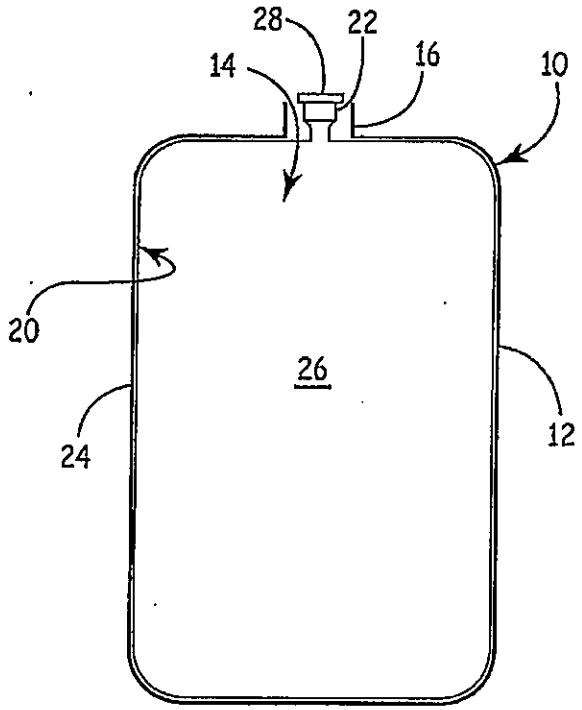

FIG. 1

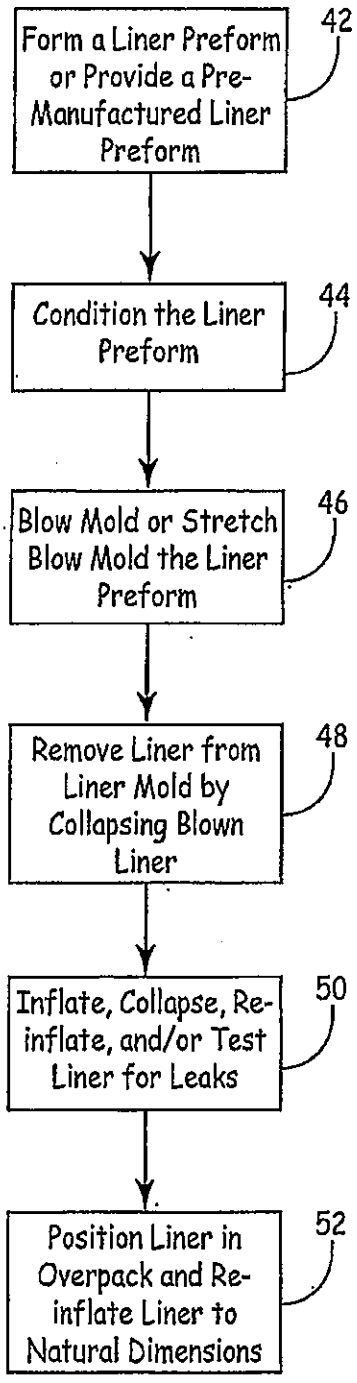
Form a Liner Preform or Provide a Pre-Manufactured Liner Preform
42
Condition the Liner Preform
44
Blow Mold or Stretch Blow Mold the Liner Preform
46
Remove Liner from Liner Mold by Collapsing Blown Liner
48
Inflate, Collapse, Re-inflate, and/or Test Liner for Leaks
50
Position Liner in Overpack and Re-inflate Liner to Natural Dimensions
52

FIG. 2

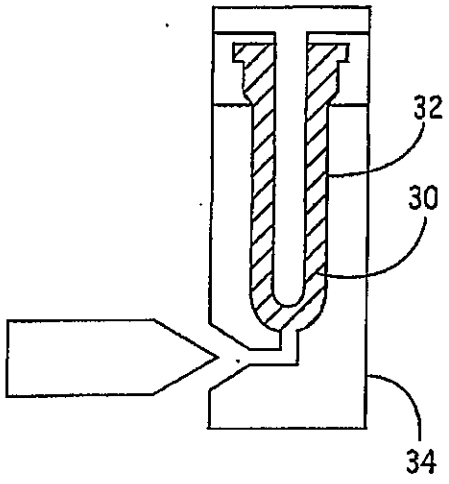

FIG. 3A

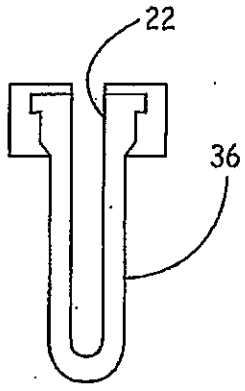

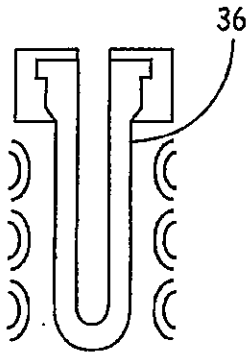

FIG. 3C

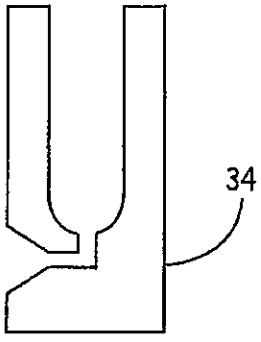

FIG. 3B

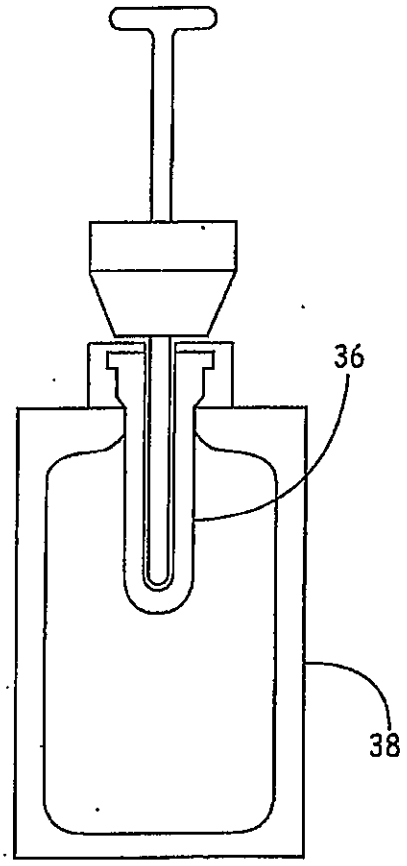

FIG. 3D

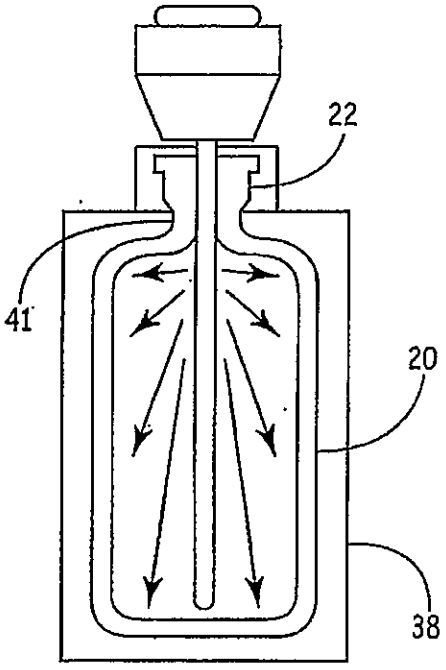

FIG. 3E

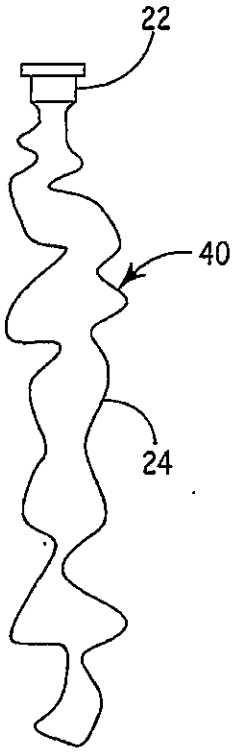

FIG. 4

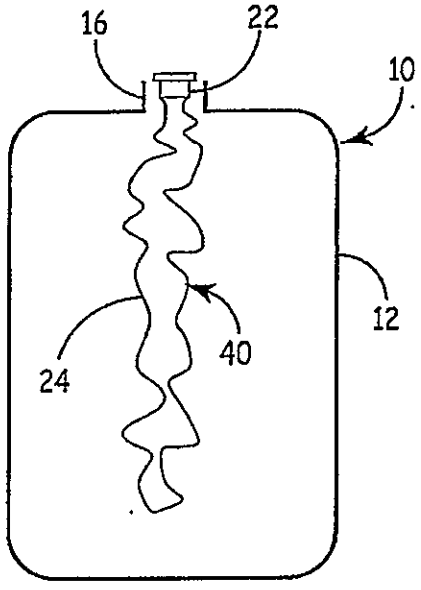

FIG. 5

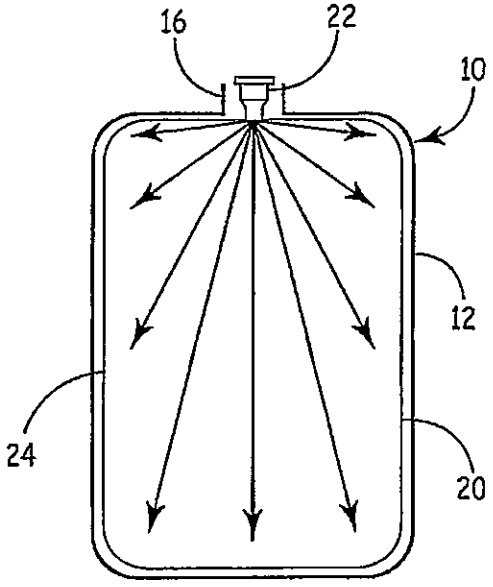

FIG. 6