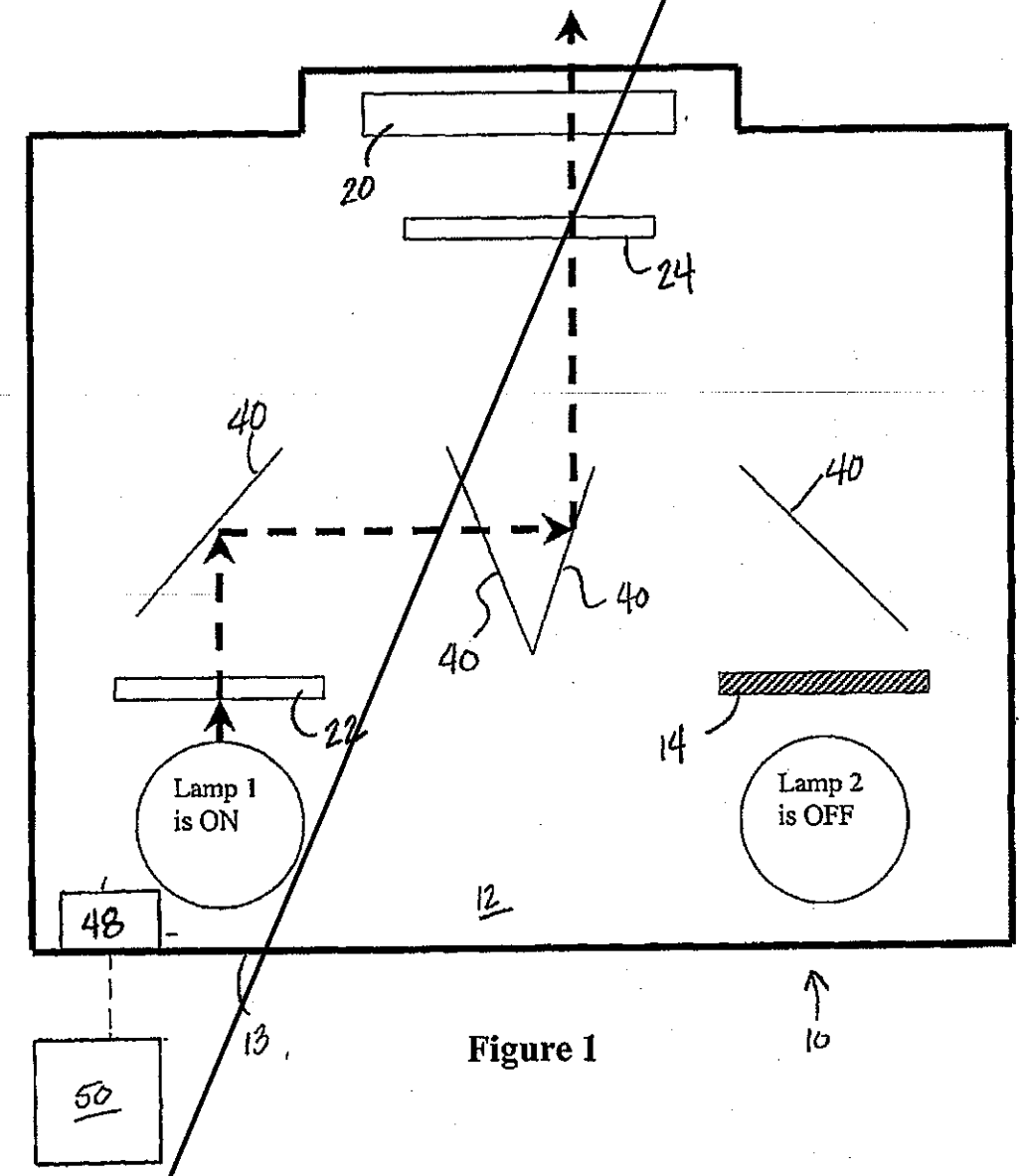

Figure 1

Figure 2

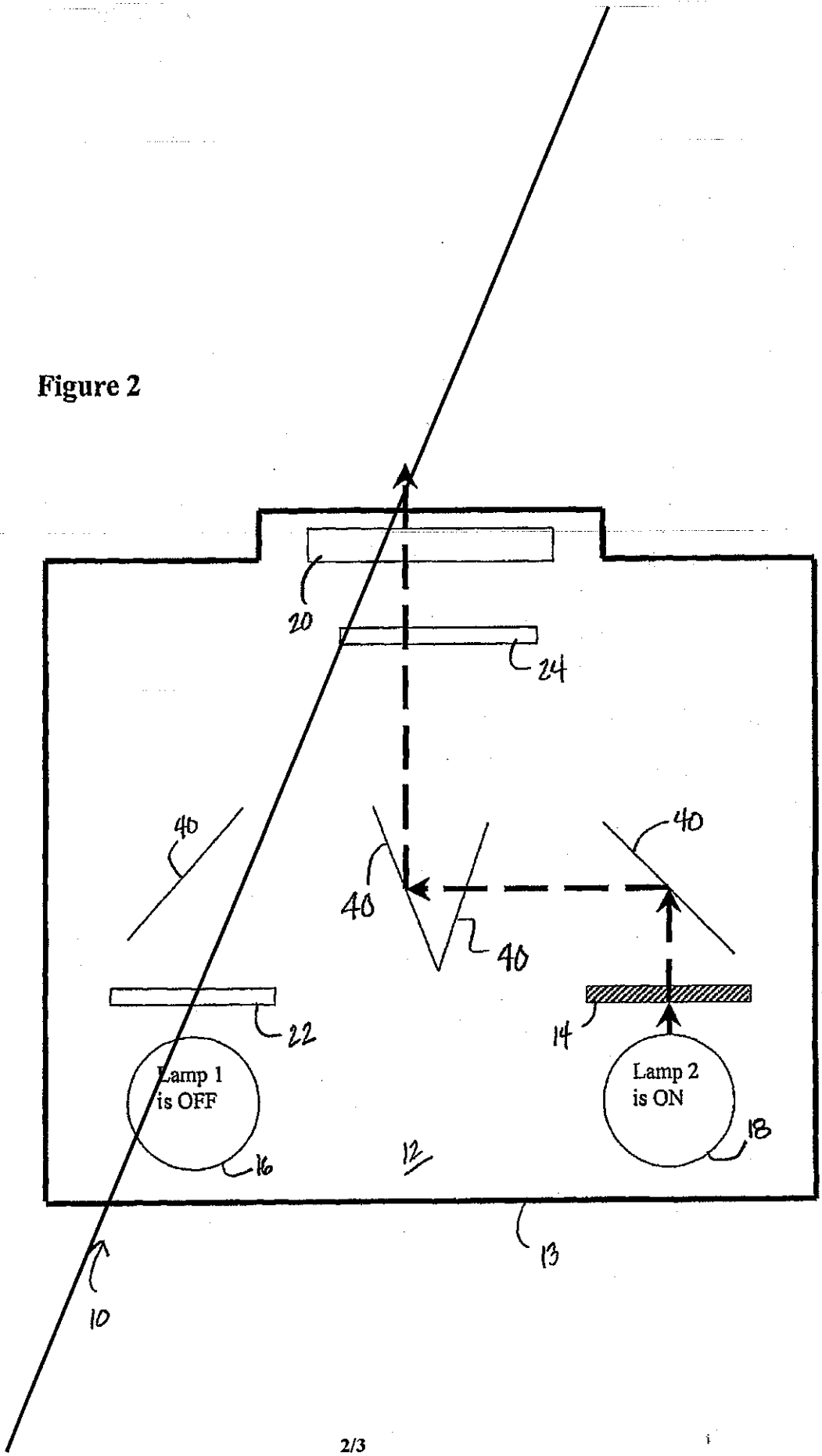

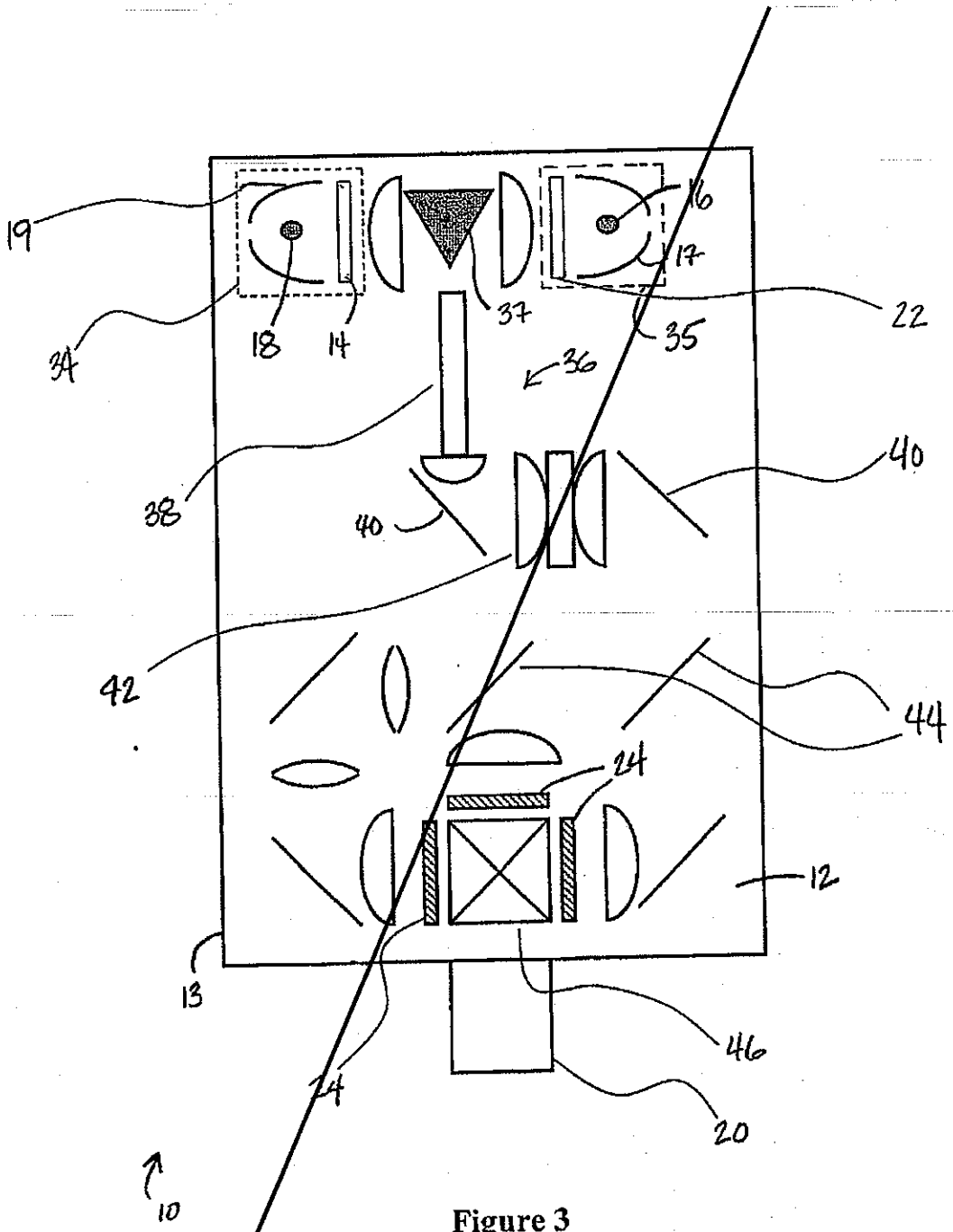

Figure 3

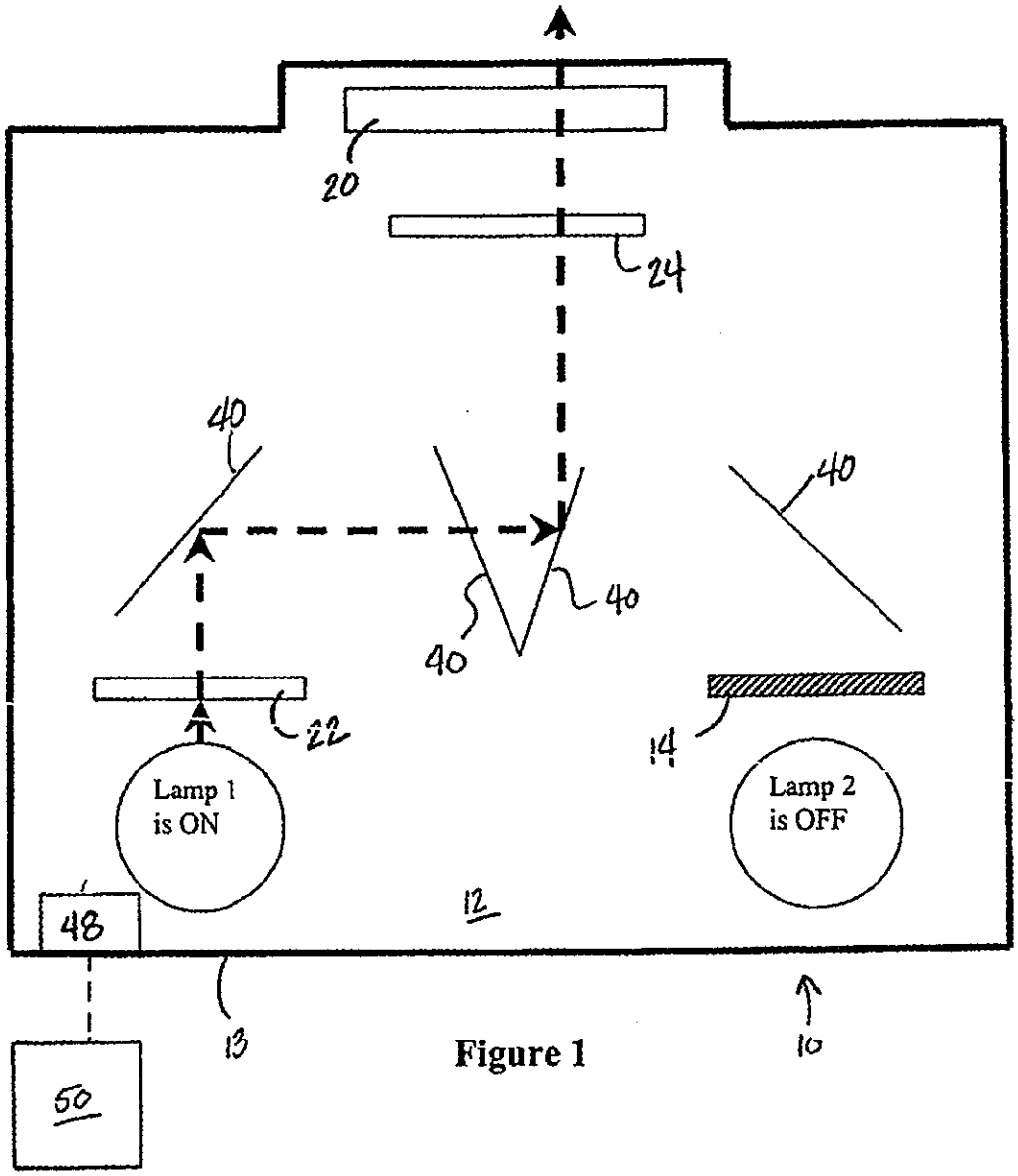

Figure 1

Figure 2

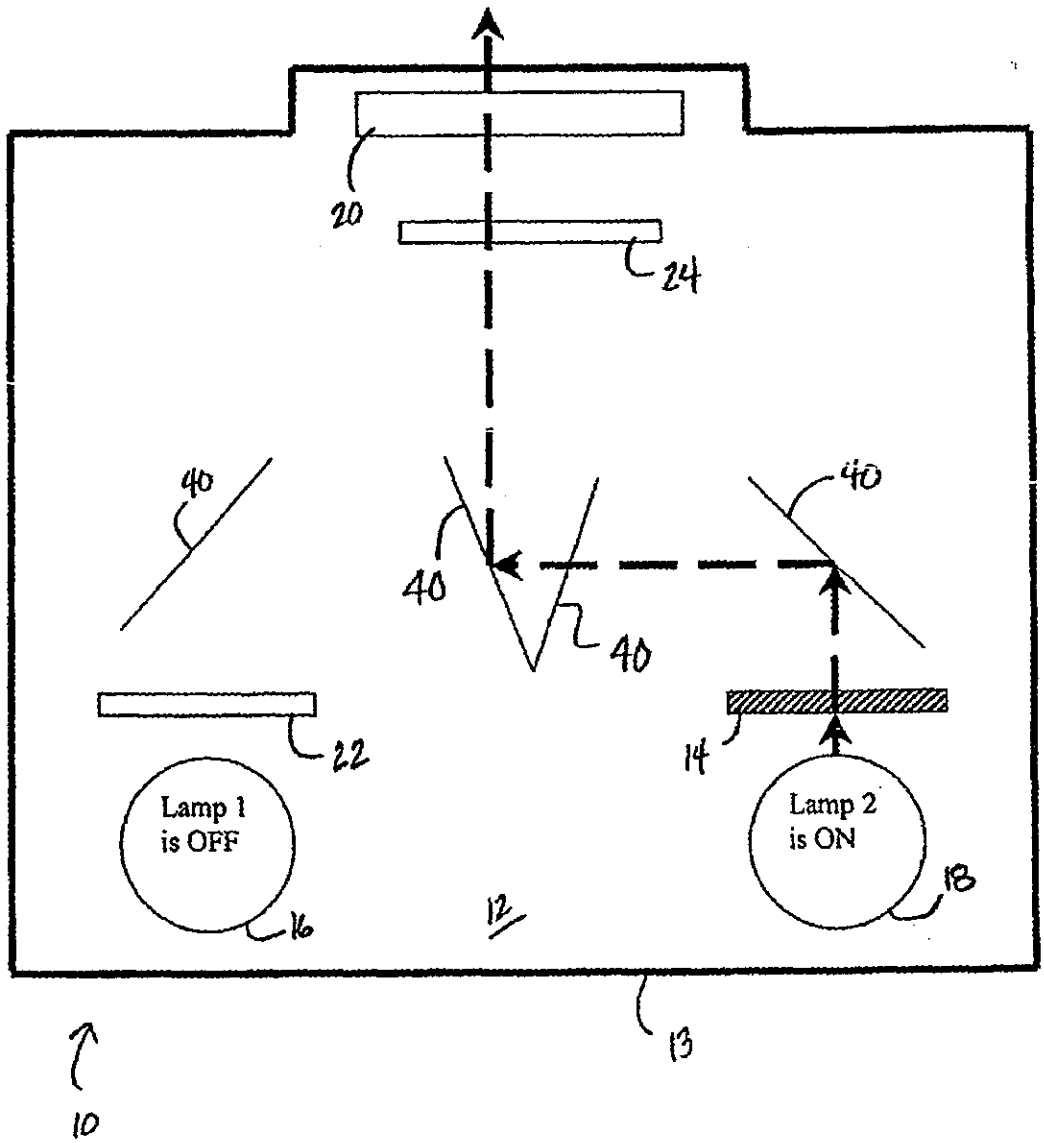

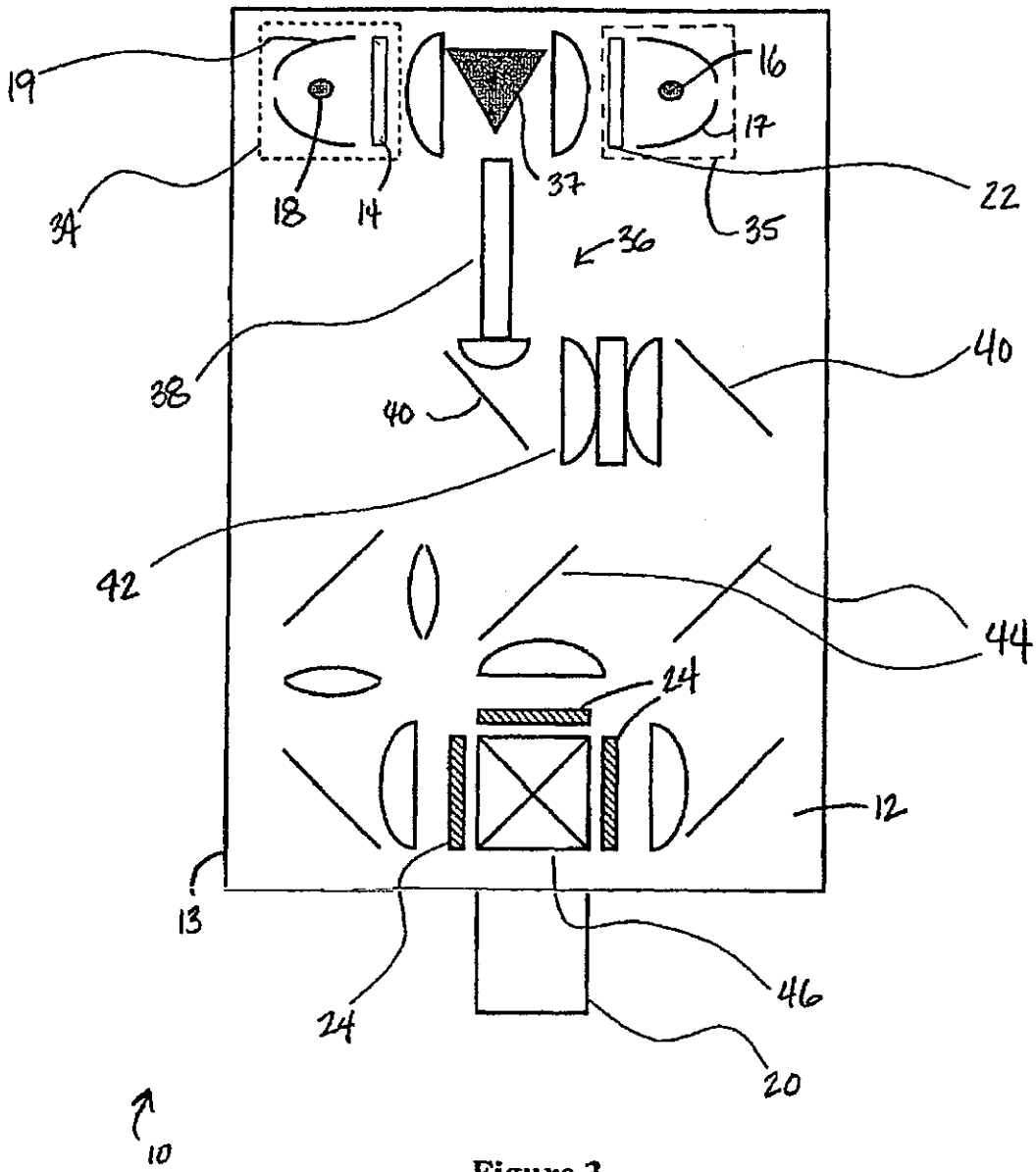

Figure 3