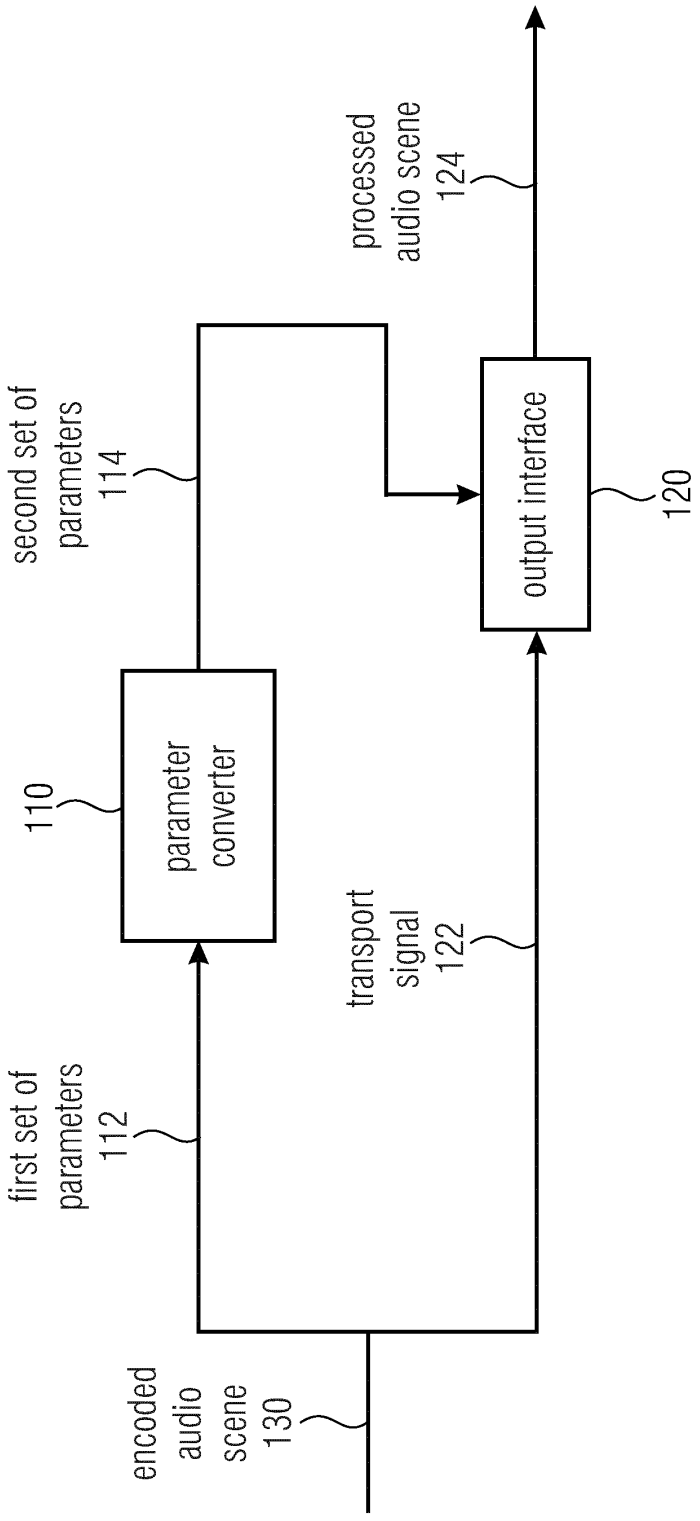
encoded audio scene 130
first set of parameters 112
110
parameter converter
second set of parameters 114
transport signal 122
output interface
120
processed audio scene 124

Fig. 1

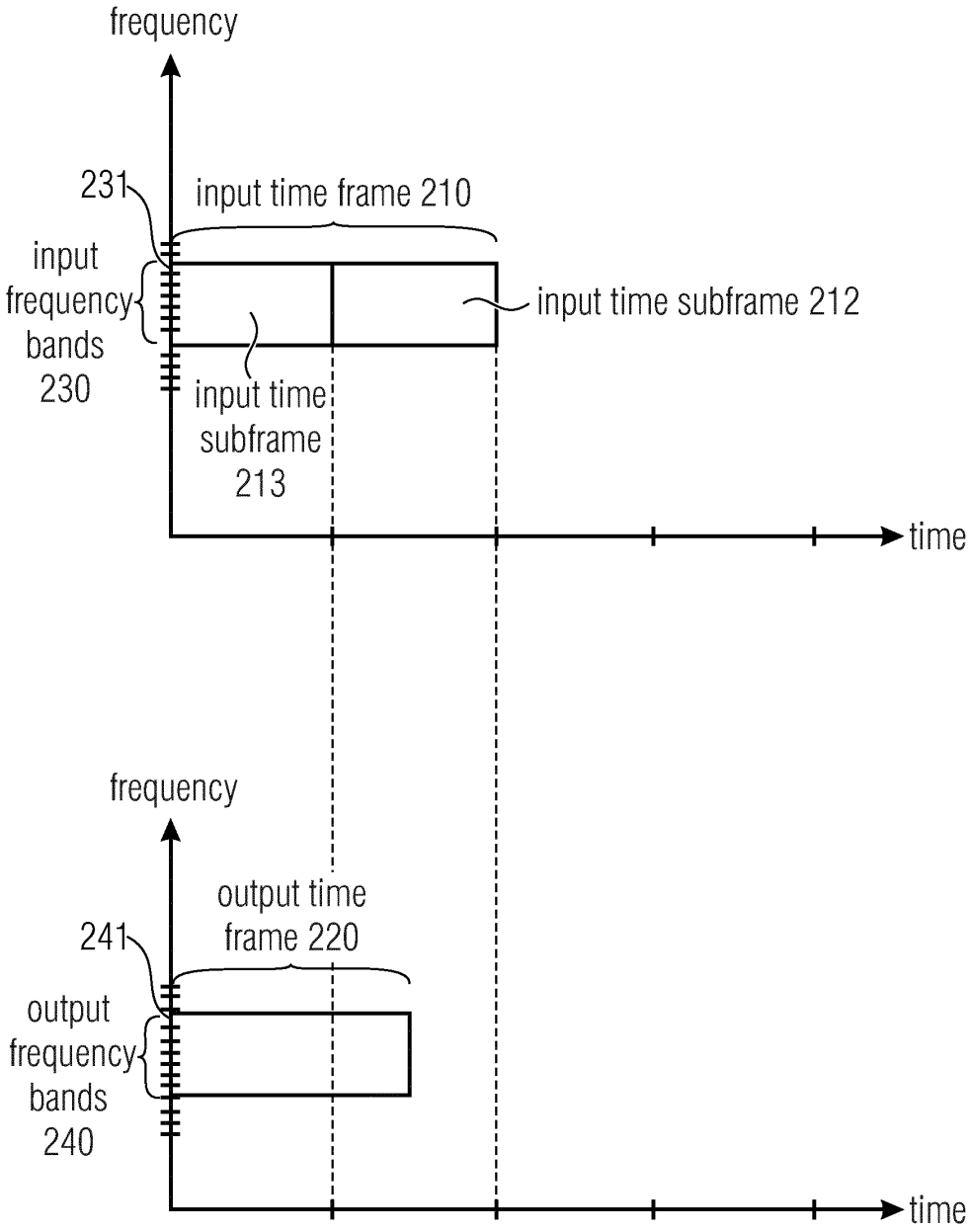
frequency
231
input time frame 210
input
frequency
bands
230
input time subframe 212
input time
subframe
213
time
frequency
output time
frame 220
241
output
frequency
bands
240
time

Fig. 2a

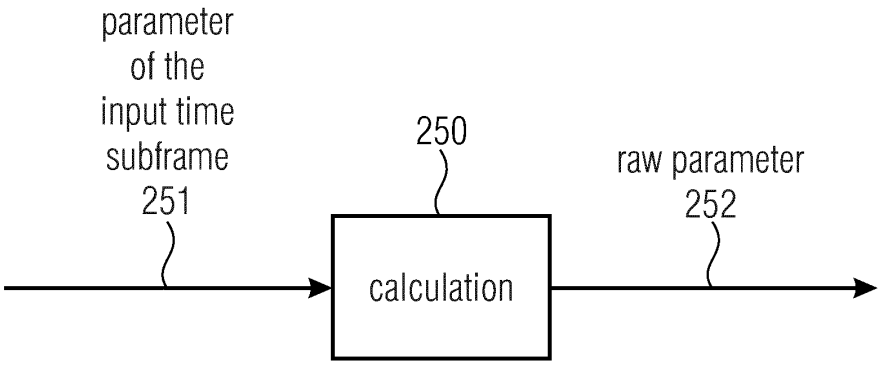
parameter of the input time subframe 251
250
raw parameter 252
calculation

Fig. 2b

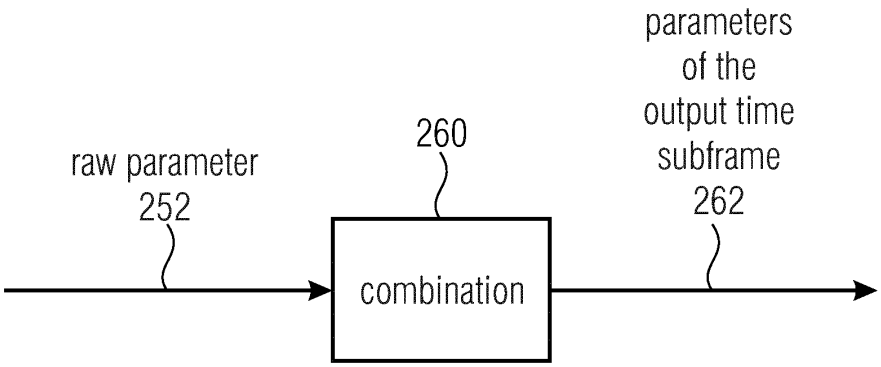
raw parameter 252
260
parameters of the output time subframe 262
combination

Fig. 2c

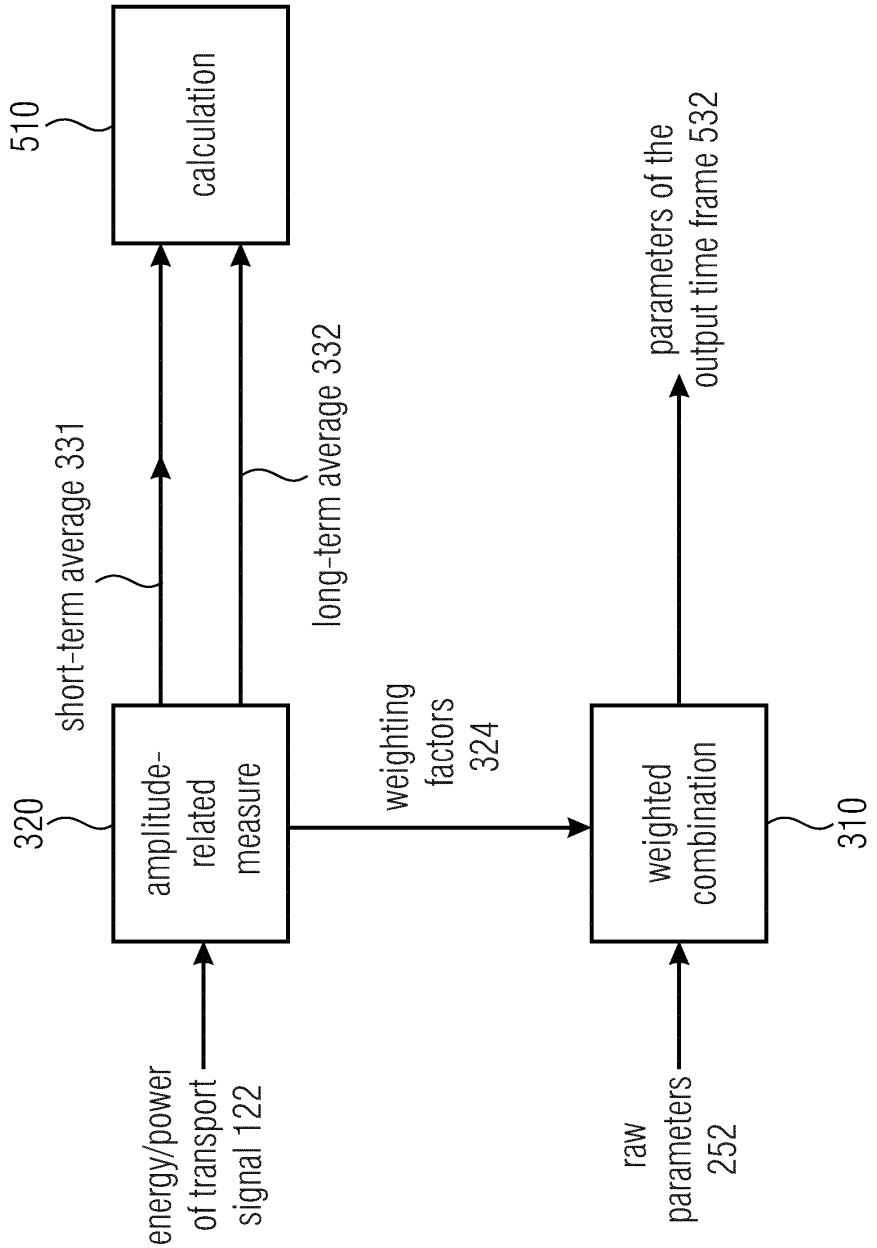
510
calculation
short-term average 331
long-term average 332
320
amplitude-related measure
weighting factors 324
weighted combination
310
parameters of the output time frame 532
energy/power of transport signal 122
raw parameters 252

Fig. 3

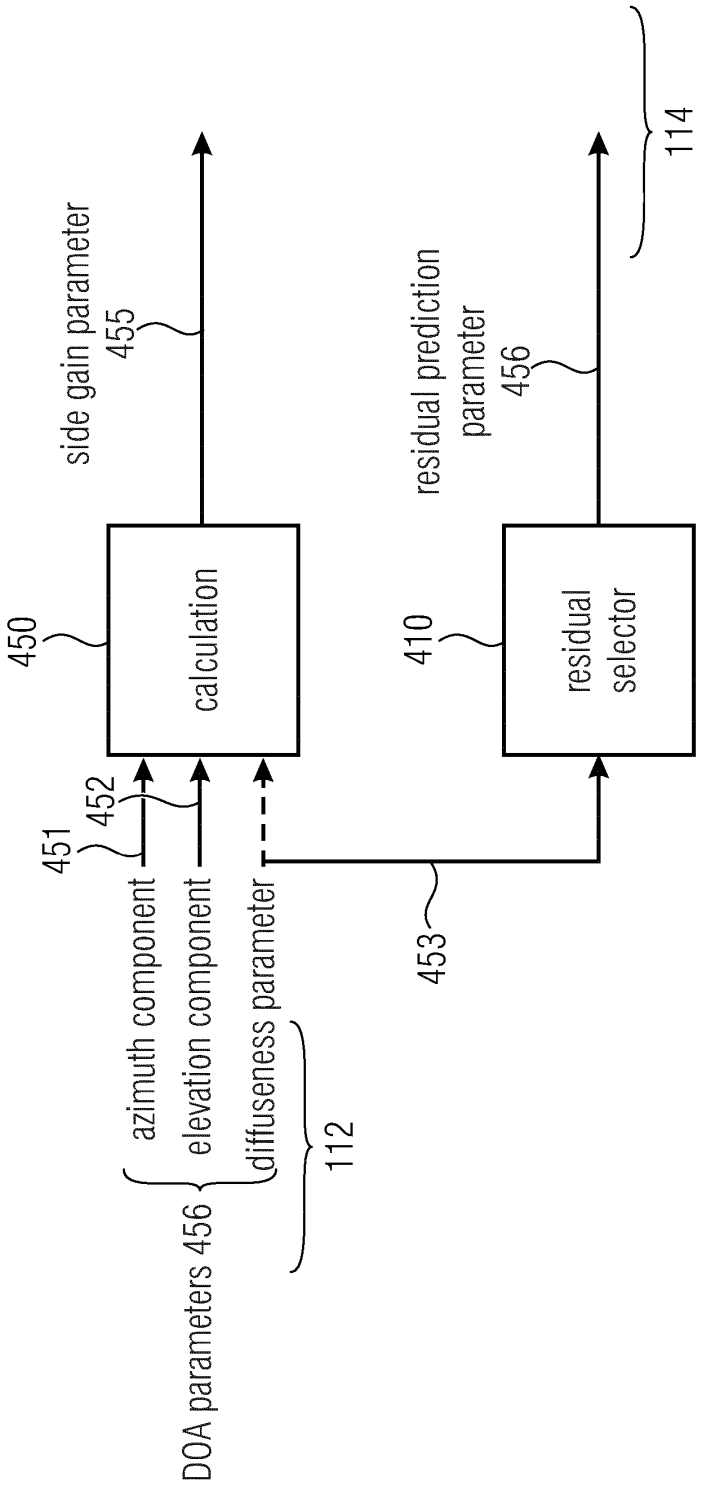
DOA parameters 456
azimuth component
elevation component
diffuseness parameter
112
451
452
450
calculation
side gain parameter
455
453
410
residual selector
residual prediction parameter
456
114

Fig. 4

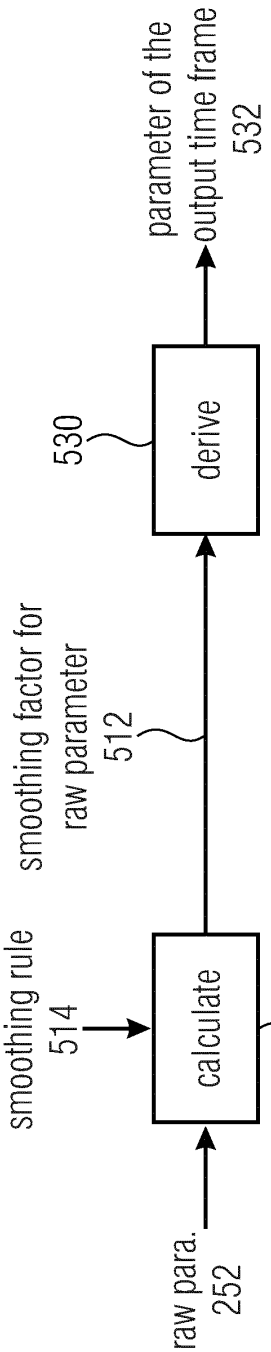
raw para.
252
smoothing rule
514
calculate
510
smoothing factor for
raw parameter
512
530
derive
parameter of the
output time frame
532

Fig. 5a

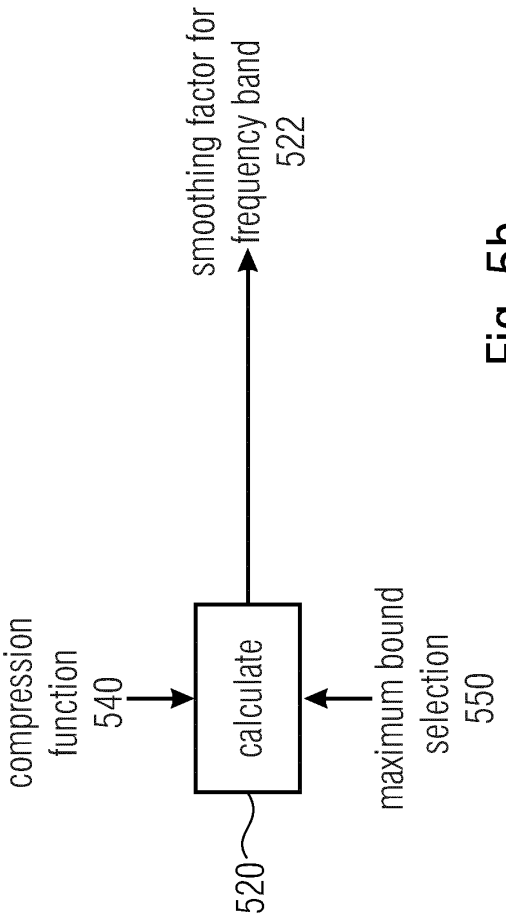
520
compression
function
540
calculate
maximum bound
selection
550
smoothing factor for
frequency band
522

Fig. 5b

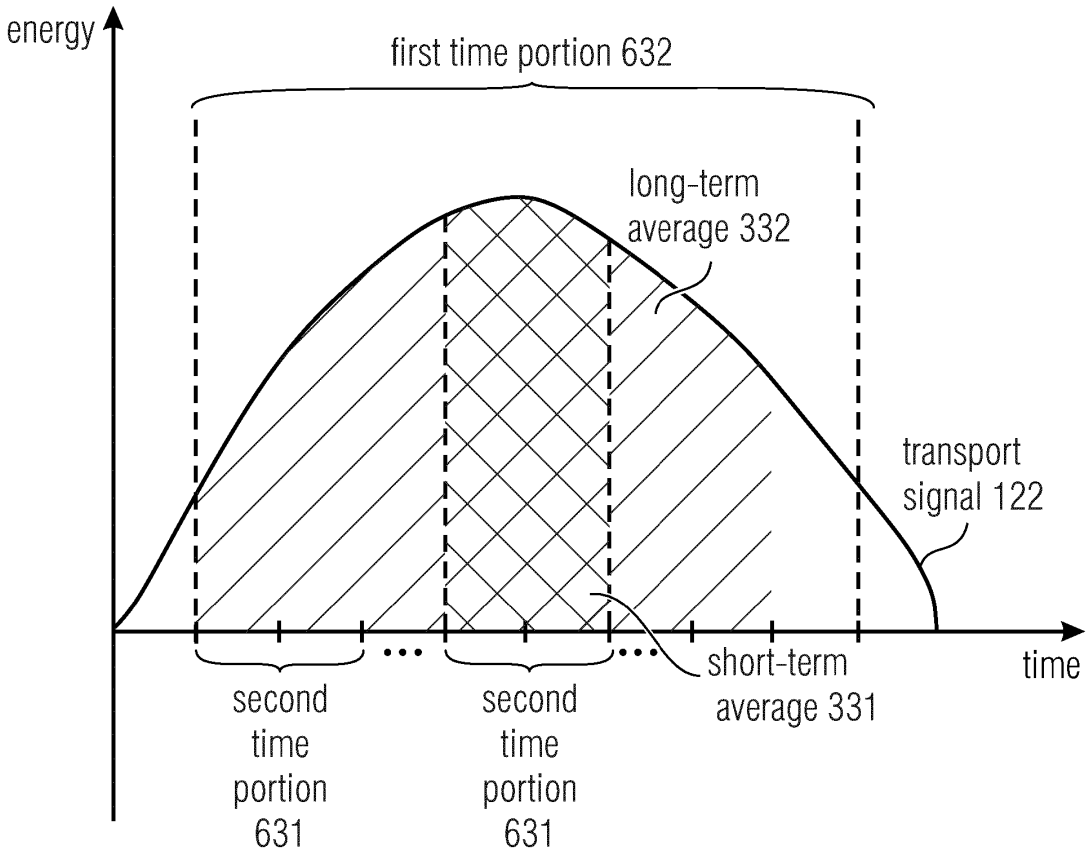
energy
first time portion 632
long-term
average 332
transport
signal 122
short-term
average 331
time
second
time
portion
631
second
time
portion
631

Fig. 6

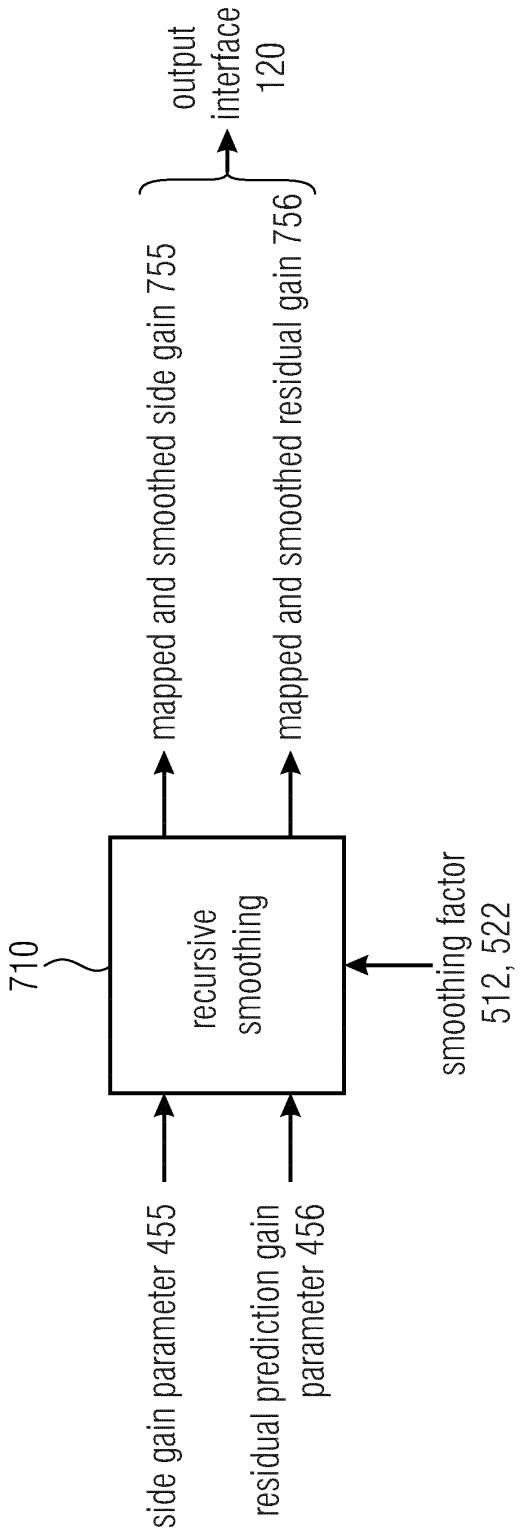
output interface 120
mapped and smoothed side gain 755
mapped and smoothed residual gain 756
710
recursive smoothing
smoothing factor 512, 522
side gain parameter 455
residual prediction gain parameter 456

Fig. 7

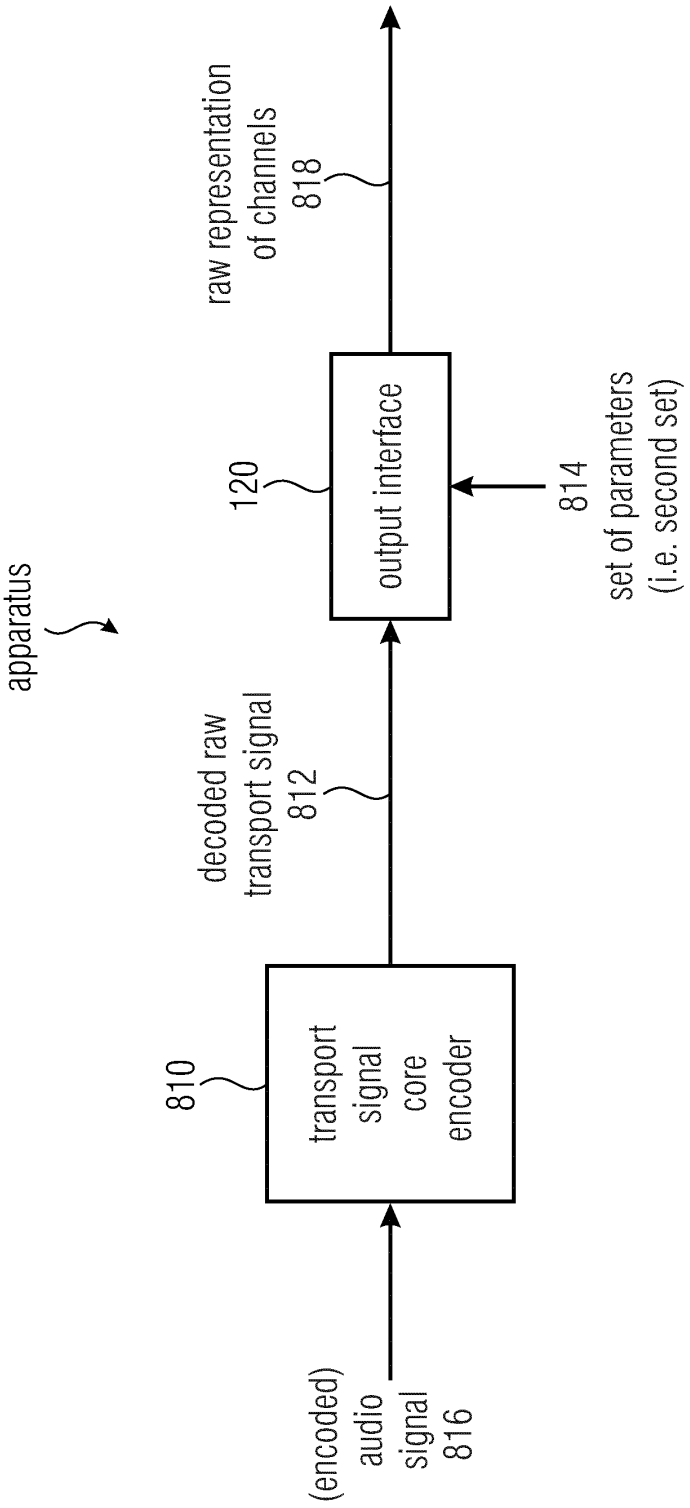
apparatus
(encoded) audio signal 816
810
transport signal core encoder
decoded raw transport signal 812
120
output interface
814
set of parameters (i.e. second set)
raw representation of channels 818

Fig. 8

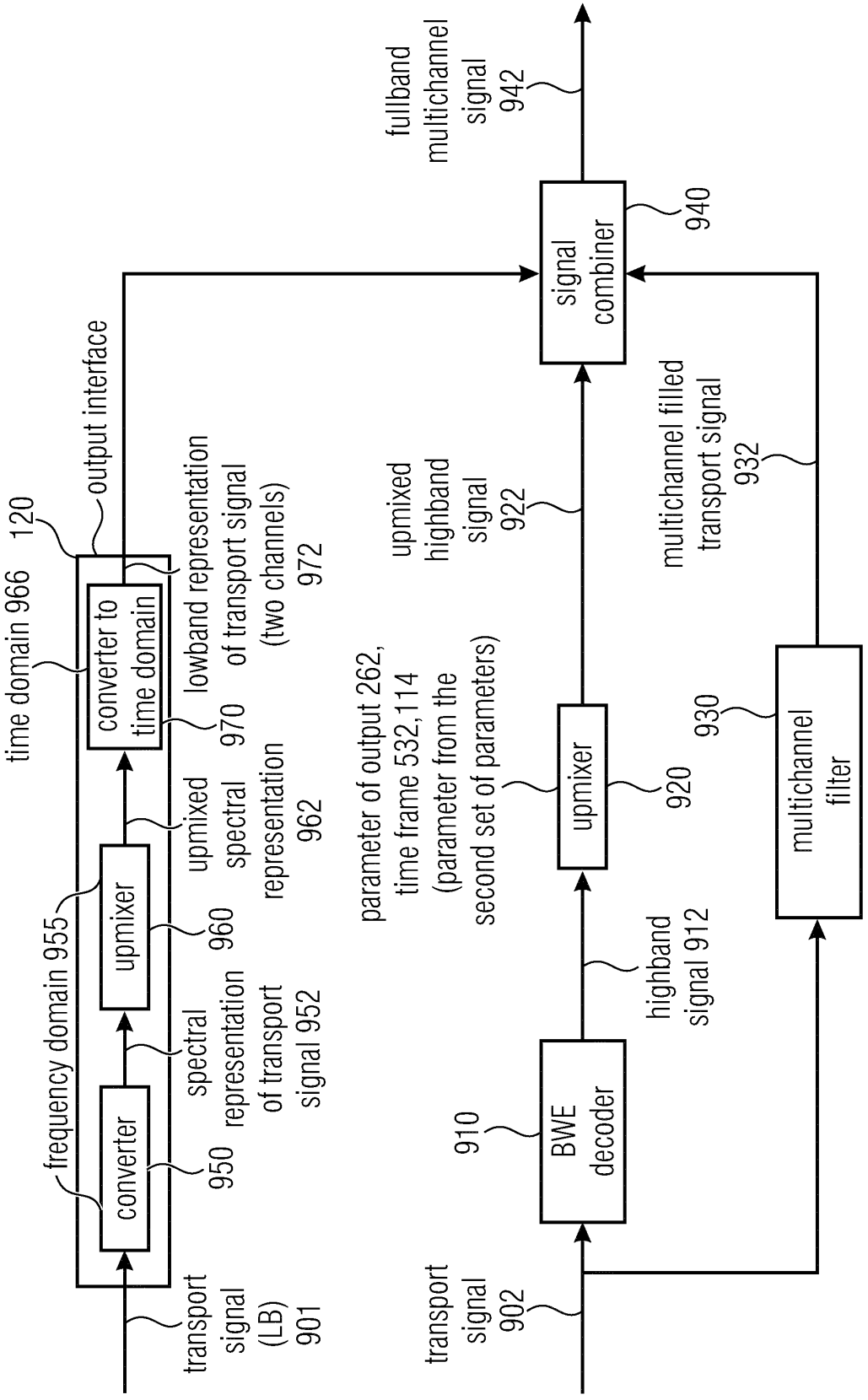
transport signal (LB) 901
converter 950
frequency domain 955
spectral representation of transport signal 952
upmixer 960
upmixed spectral representation 962
converter to time domain 970
time domain 966
120
output interface
lowband representation of transport signal (two channels) 972
transport signal 902
BWE decoder 910
highband signal 912
parameter of output 262, time frame 532,114 (parameter from the second set of parameters)
upmixer 920
upmixed highband signal 922
multichannel filter 930
multichannel filled transport signal 932
signal combiner 940
fullband multichannel signal 942

Fig. 9

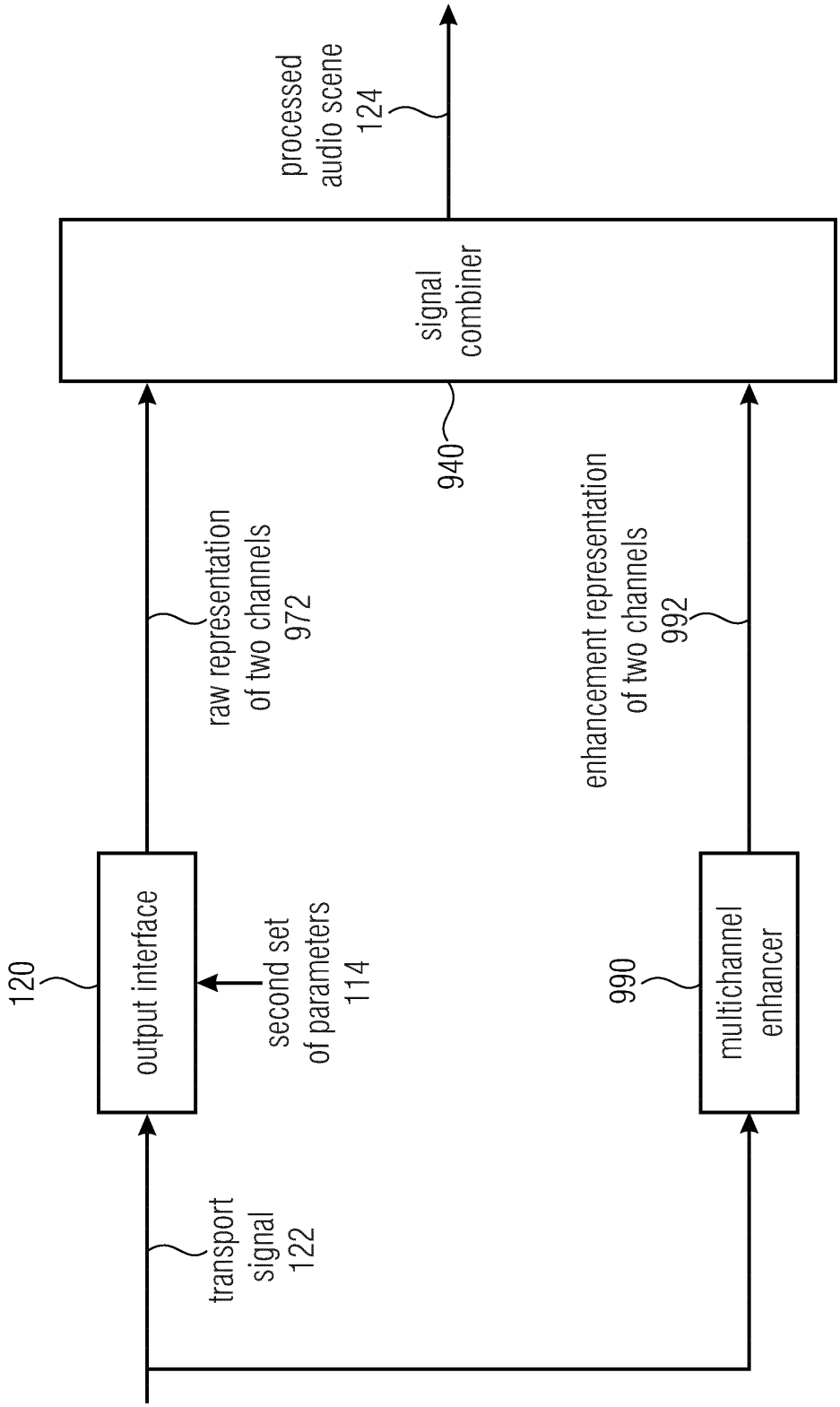
processed audio scene 124
signal combiner
940
raw representation of two channels 972
enhancement representation of two channels 992
120
output interface
second set of parameters 114
990
multichannel enhancer
transport signal 122

Fig. 10

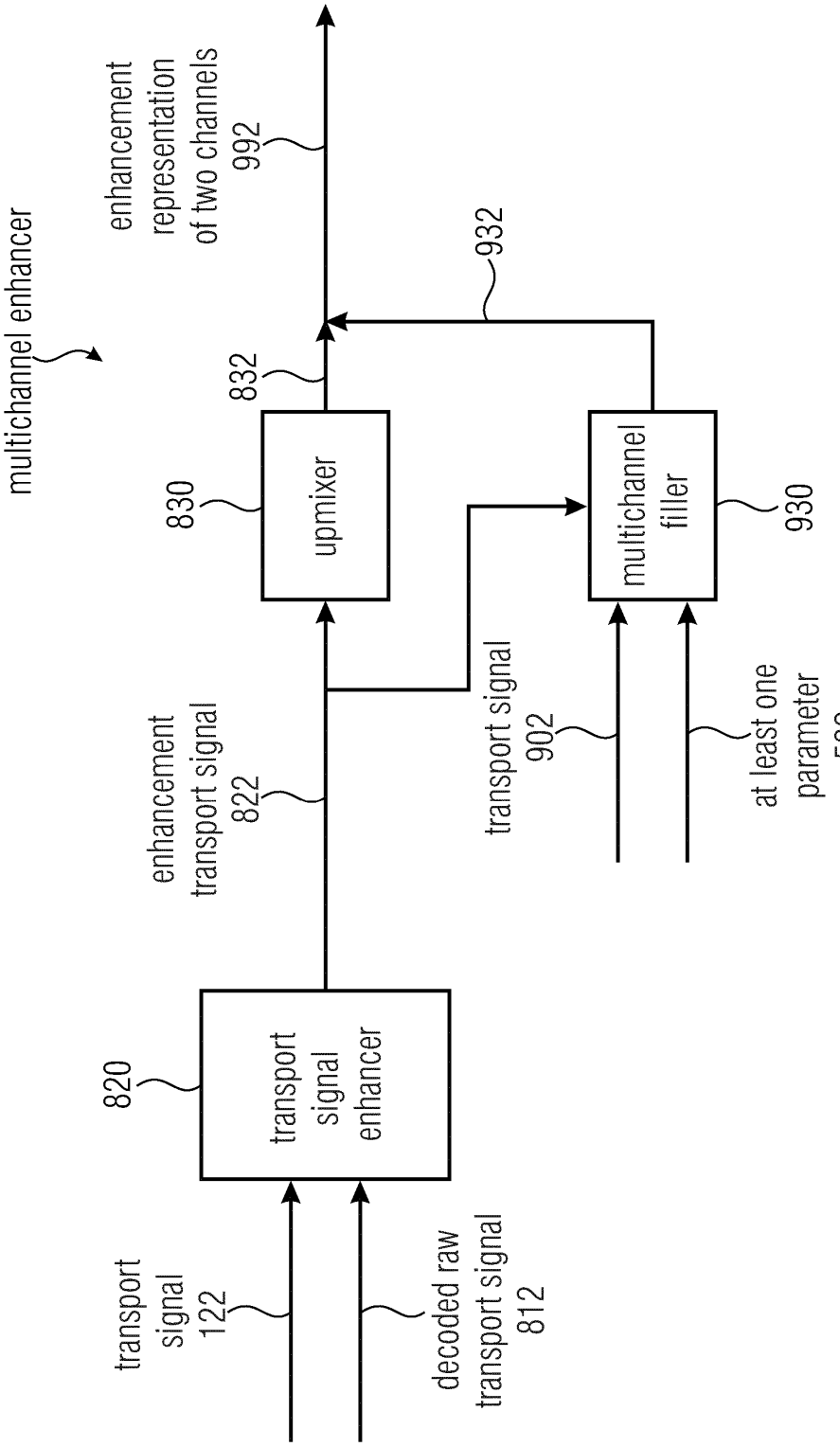
multichannel enhancer
enhancement representation of two channels 992
932
832
upmixer
830
multichannel filler
930
enhancement transport signal 822
transport signal 902
at least one parameter 532
820
transport signal enhancer
transport signal 122
decoded raw transport signal 812

Fig. 11

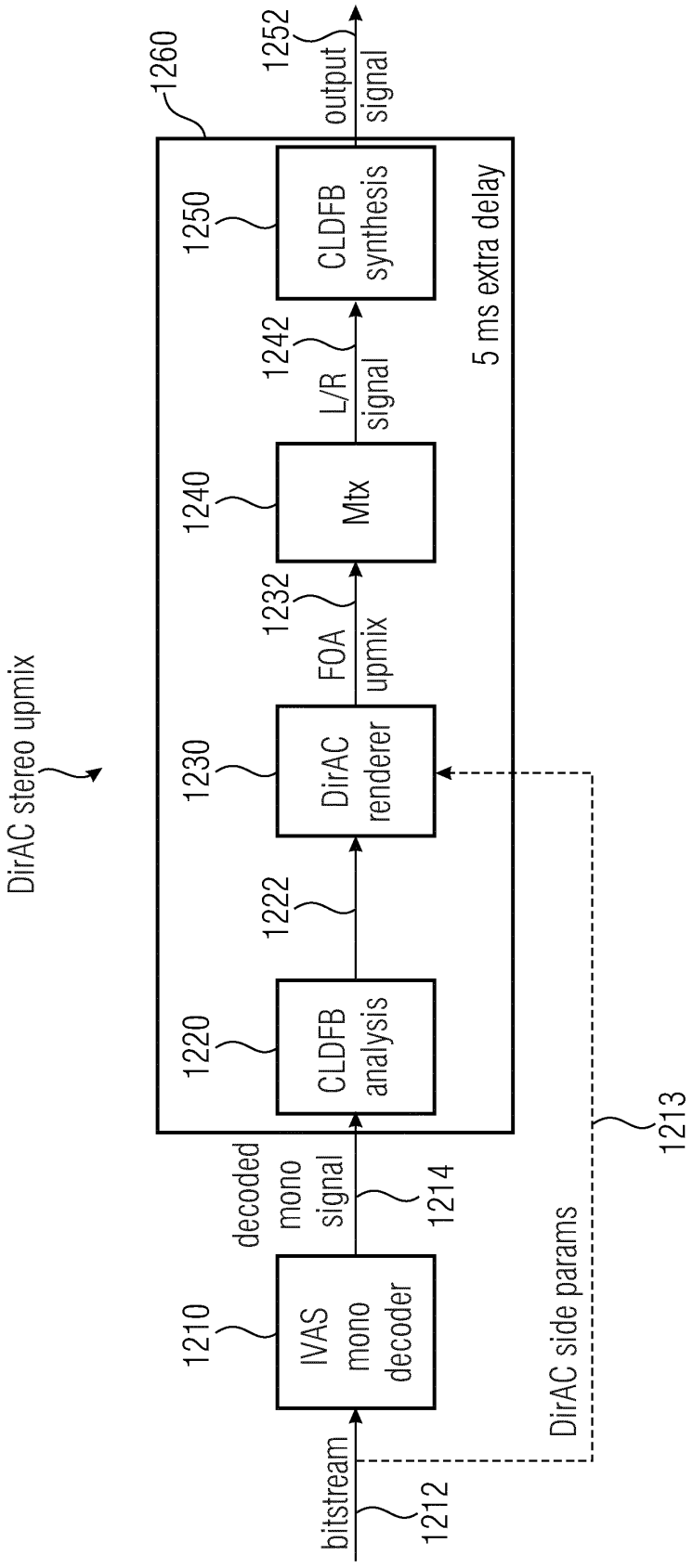
DirAC stereo upmix
1260
1252
output signal
1250
CLDFB synthesis
5 ms extra delay
1242
L/R signal
1240
Mtx
1232
FOA upmix
1230
DirAC renderer
1222
1220
CLDFB analysis
decoded mono signal
1214
1213
1210
IVAS mono decoder
DirAC side params
bitstream
1212

Fig. 12

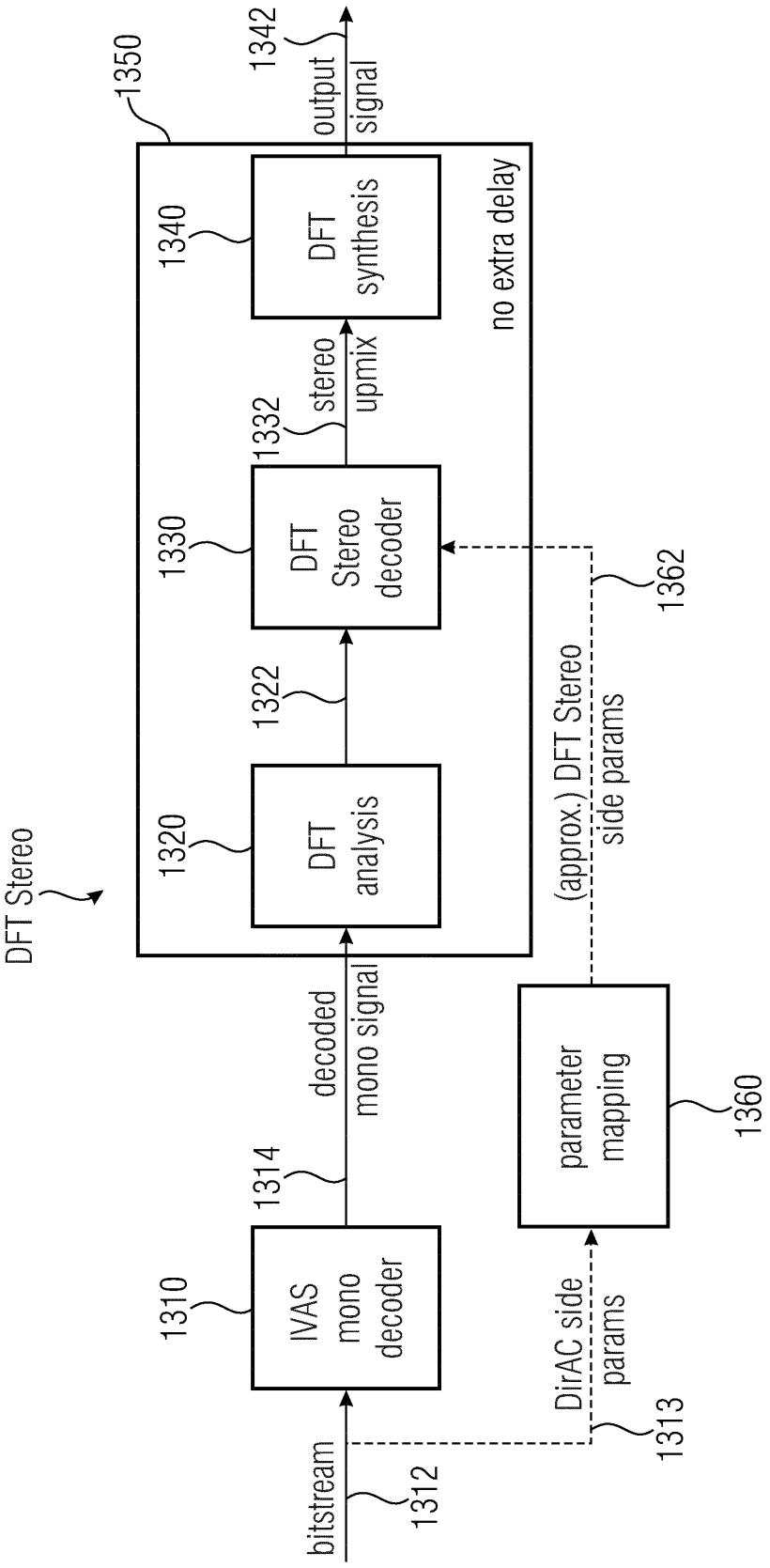
DFT Stereo
1350
1342
output signal
1340
DFT synthesis
no extra delay
1330
DFT Stereo decoder
1332
stereo upmix
1320
DFT analysis
1322
1362
(approx.) DFT Stereo side params
1314
decoded mono signal
1310
IVAS mono decoder
parameter mapping
1360
DirAC side params
1313
bitstream
1312

Fig. 13

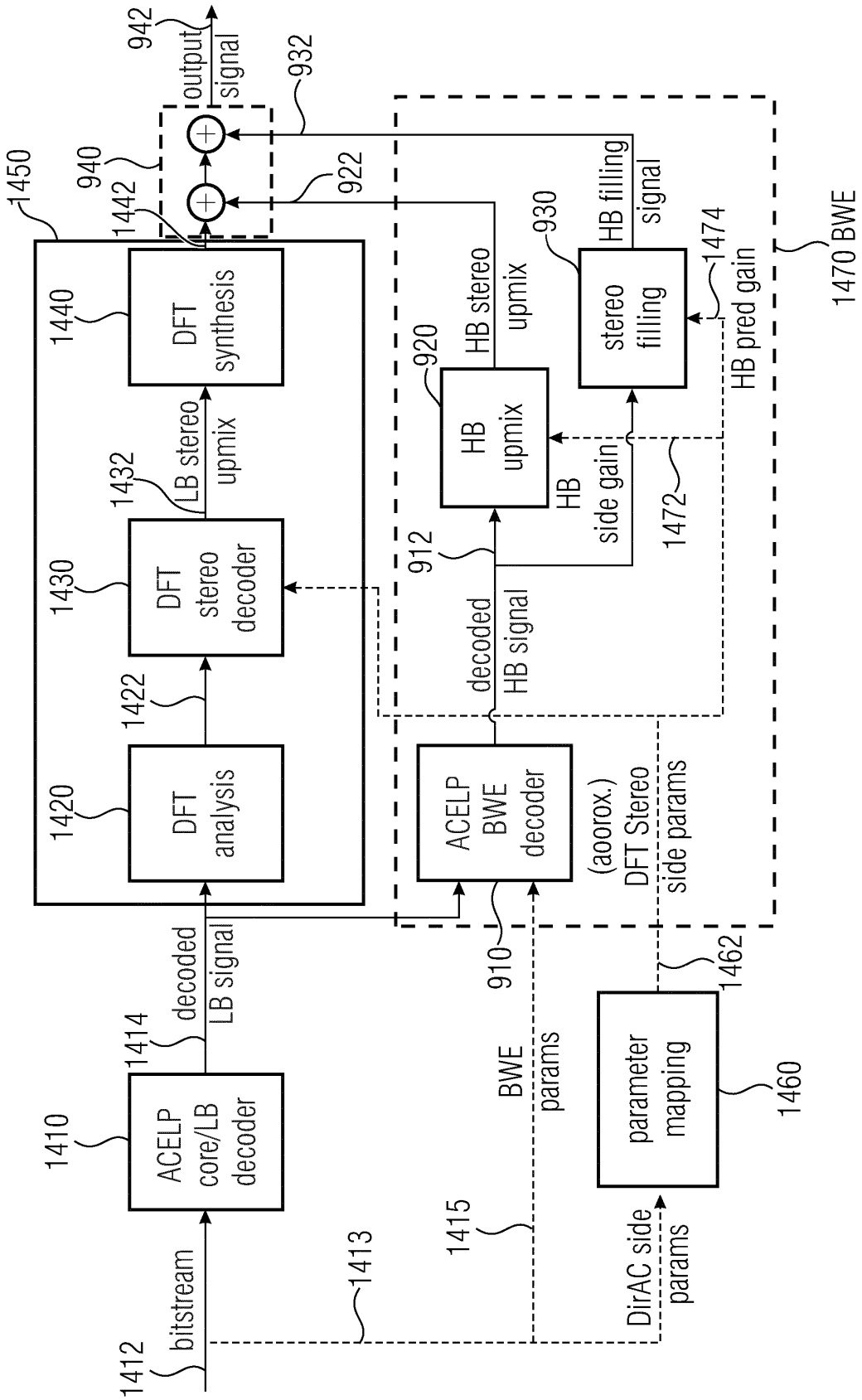
1412
bitstream
1413
1410
ACELP core/LB decoder
1414
decoded LB signal
1415
BWE params
1420
DFT analysis
1422
1430
DFT stereo decoder
1432
LB stereo upmix
1440
DFT synthesis
1442
940
1450
942
output signal
932
922
910
ACELP BWE decoder
912
decoded HB signal
920
HB upmix
HB side gain
1472
HB stereo upmix
930
stereo filling
HB filling signal
1474
HB pred gain
1470 BWE
(aoorox.) DFT Stereo side params
1462
parameter mapping
1460
DirAC side params

Fig. 14