DRAWING

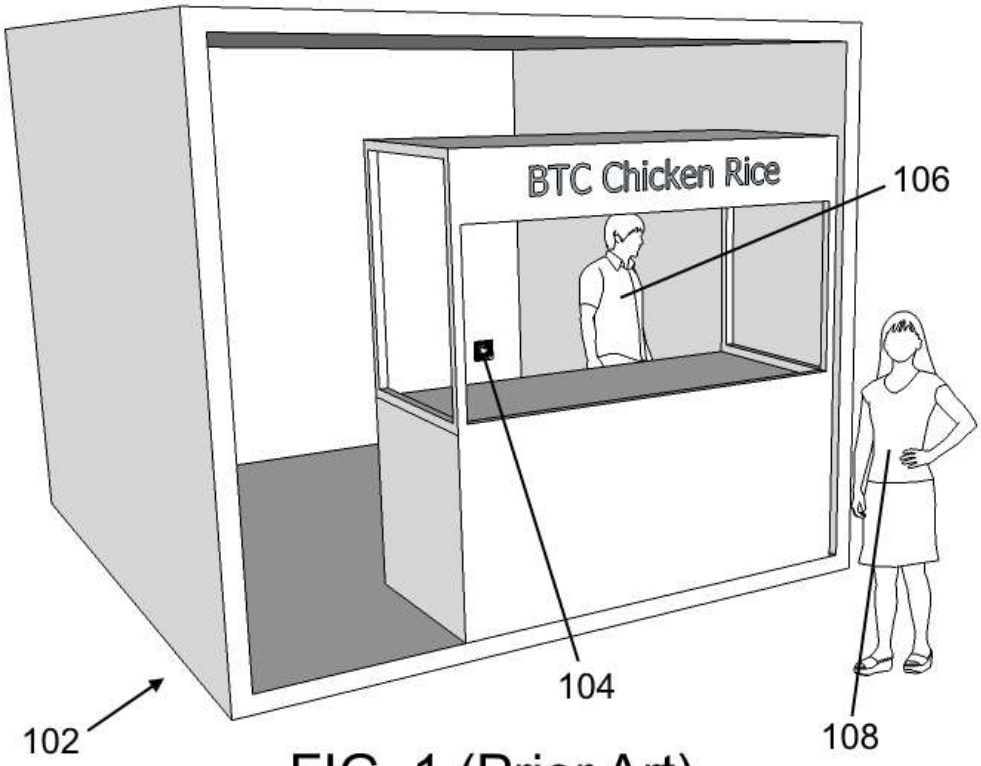

FIG. 1 (Prior Art)

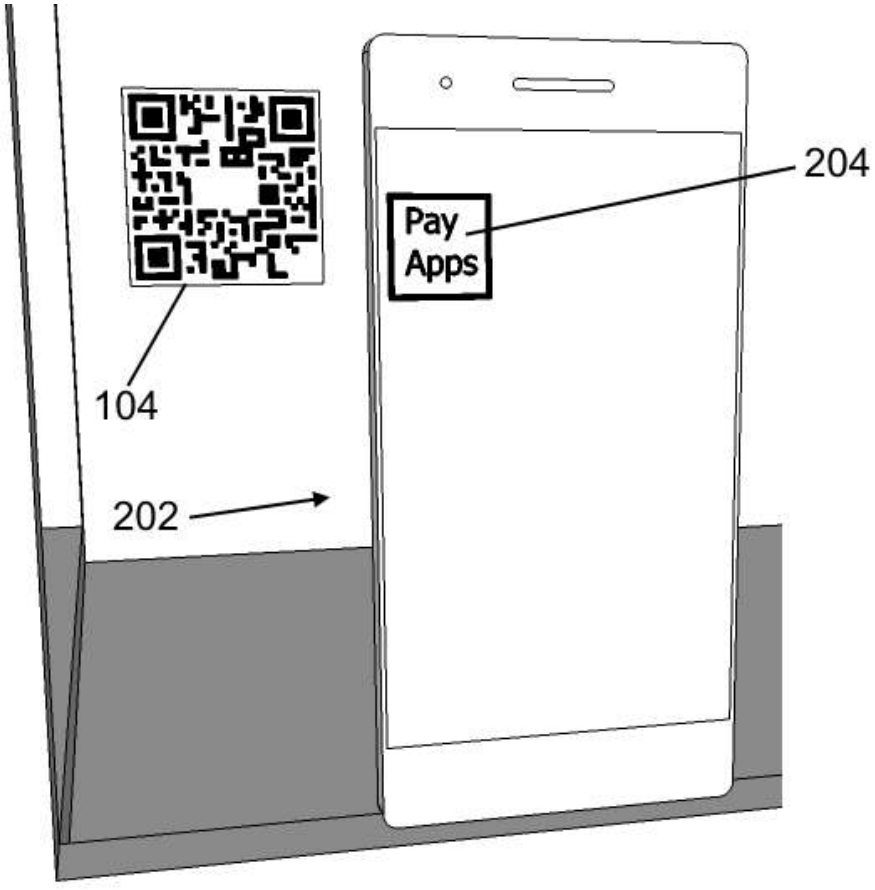

FIG. 2 (Prior Art)

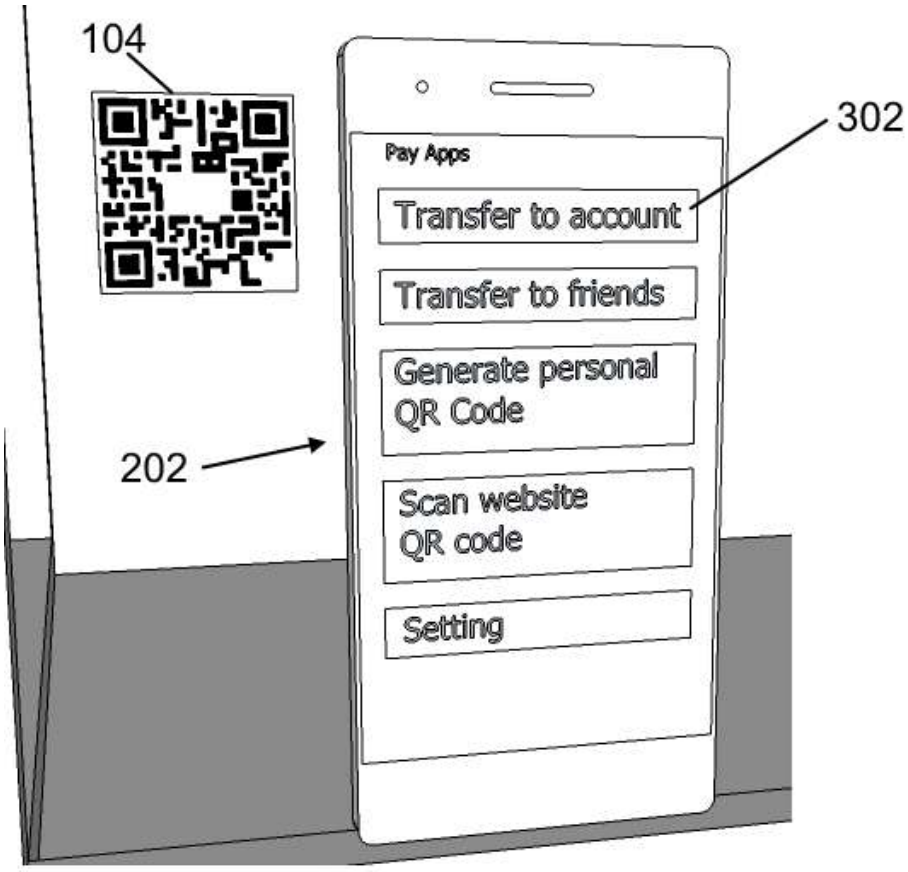

FIG. 3 (Prior Art)

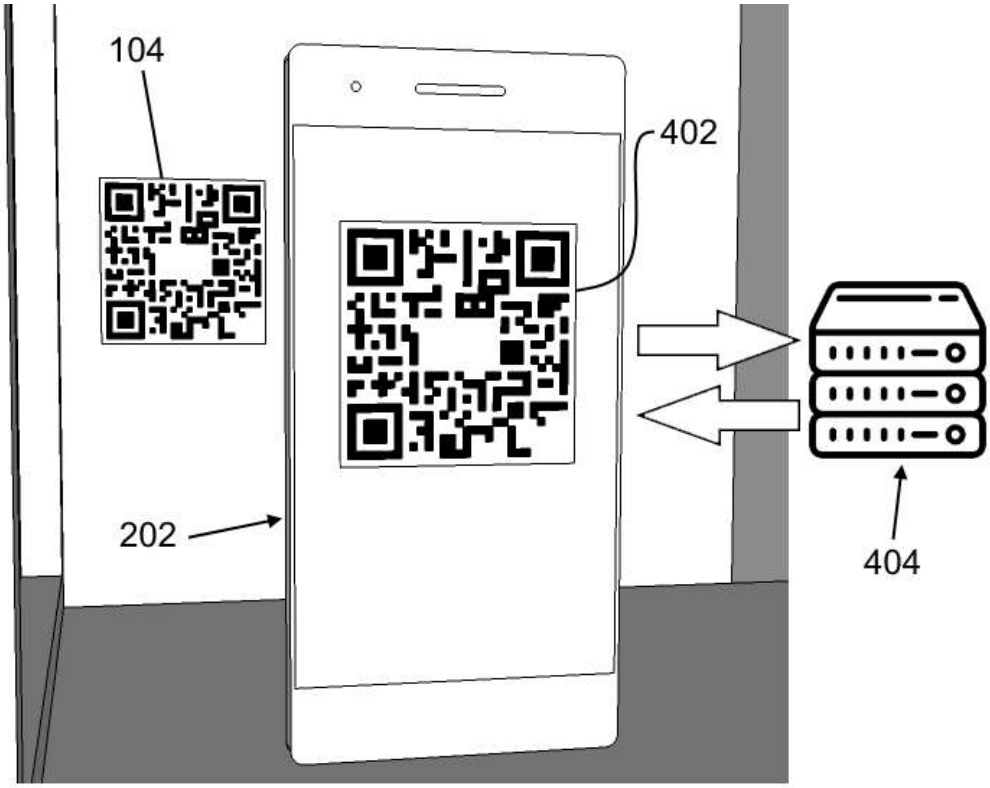

FIG. 4 (Prior Art)

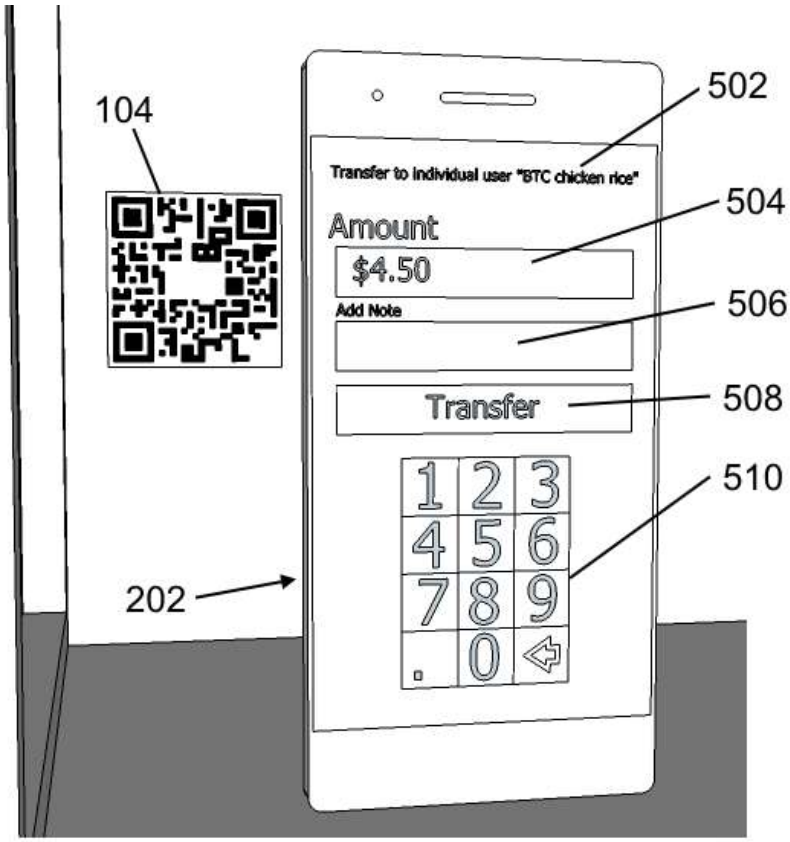

FIG. 5 (Prior Art)

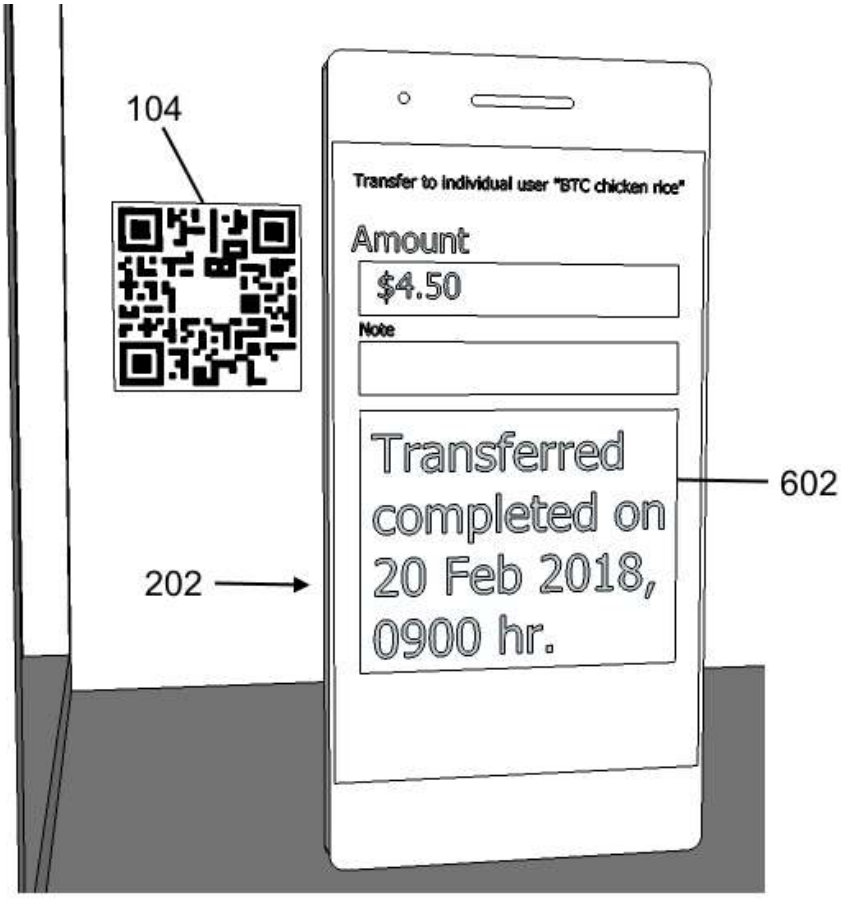

FIG. 6 (Prior Art)

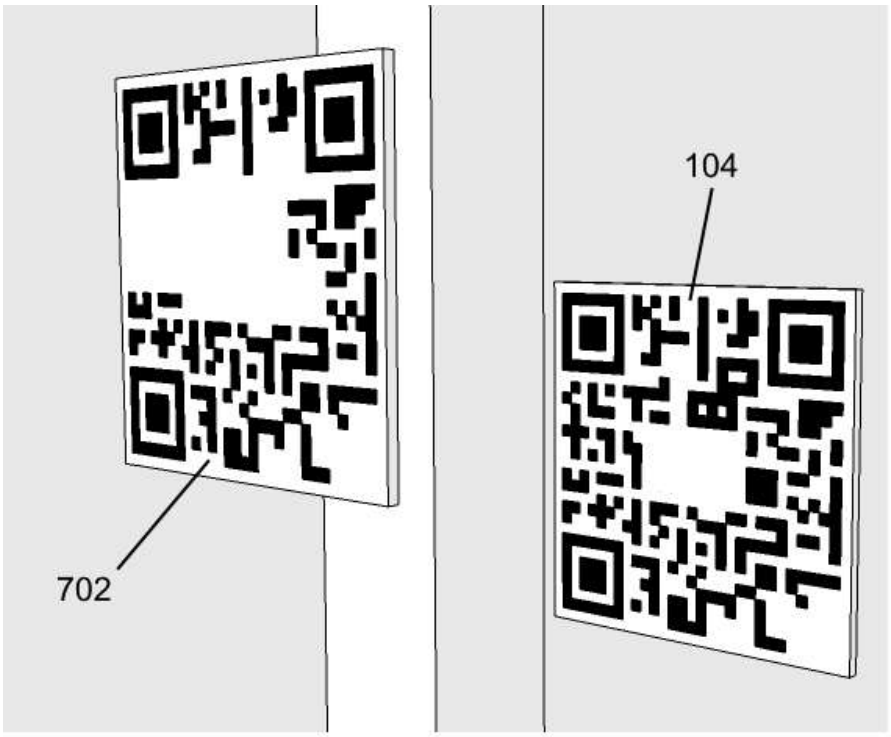

FIG. 7 (Prior Art)

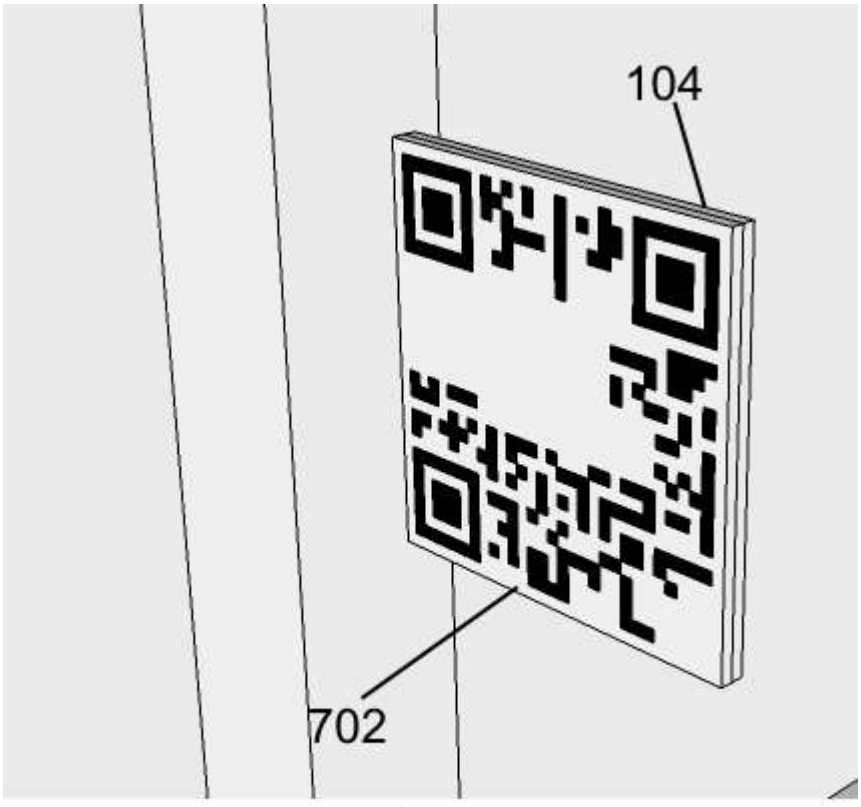

FIG. 8 (Prior Art)

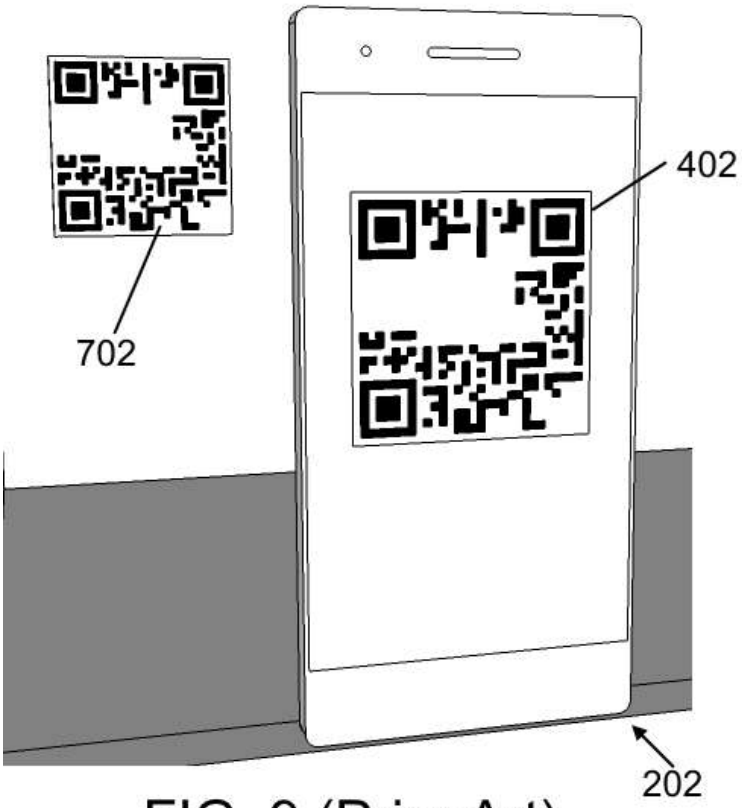

FIG. 9 (Prior Art)

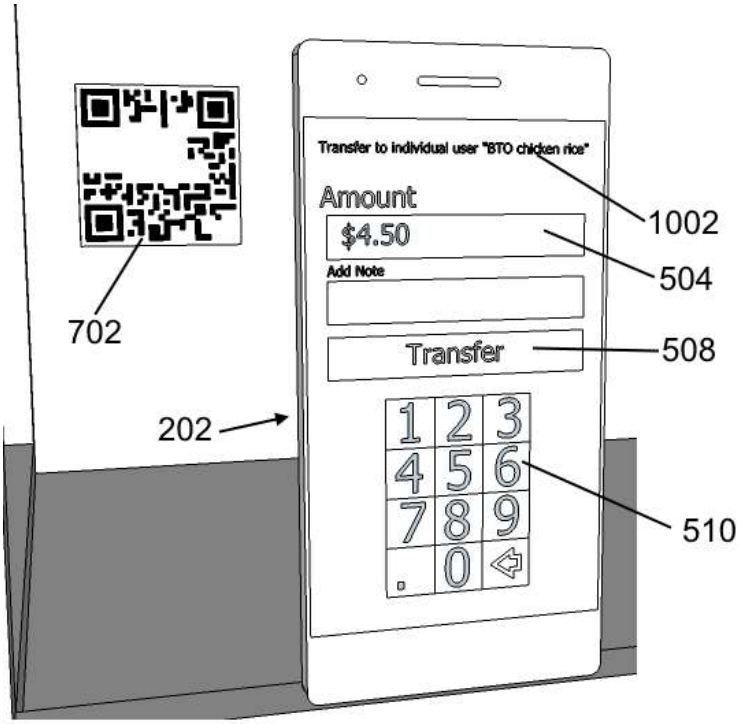

FIG. 10 (Prior Art)

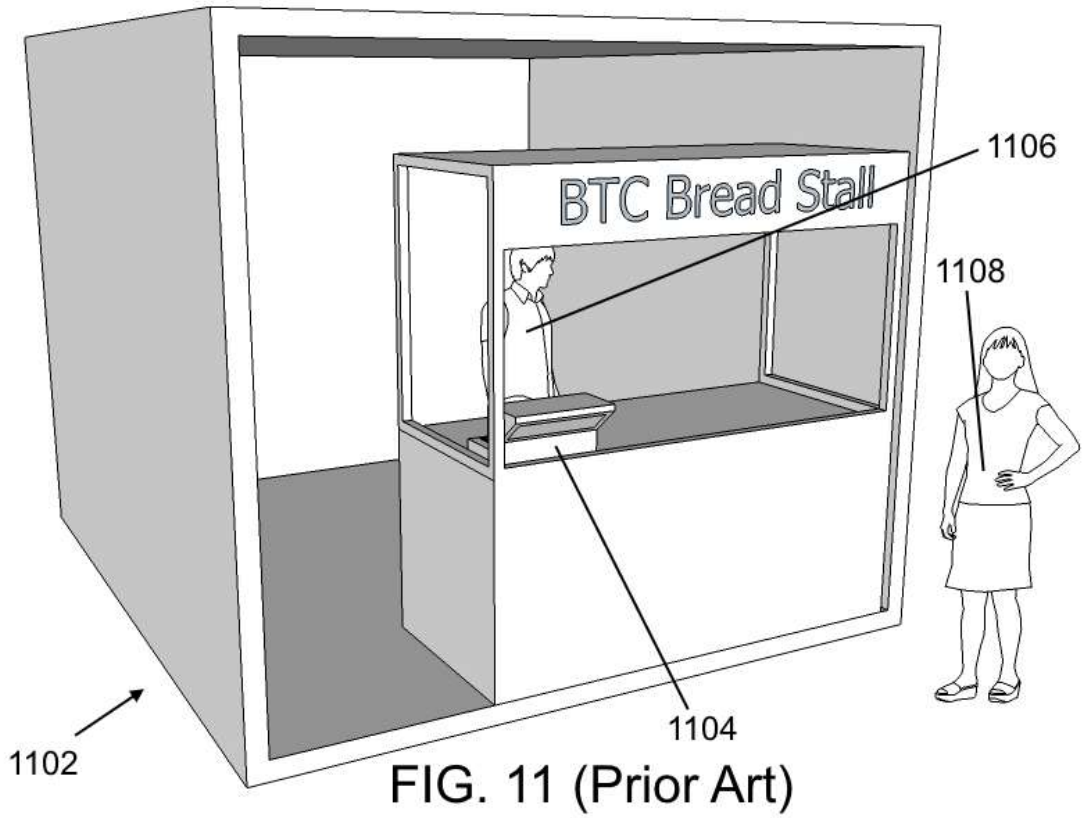

FIG. 11 (Prior Art)

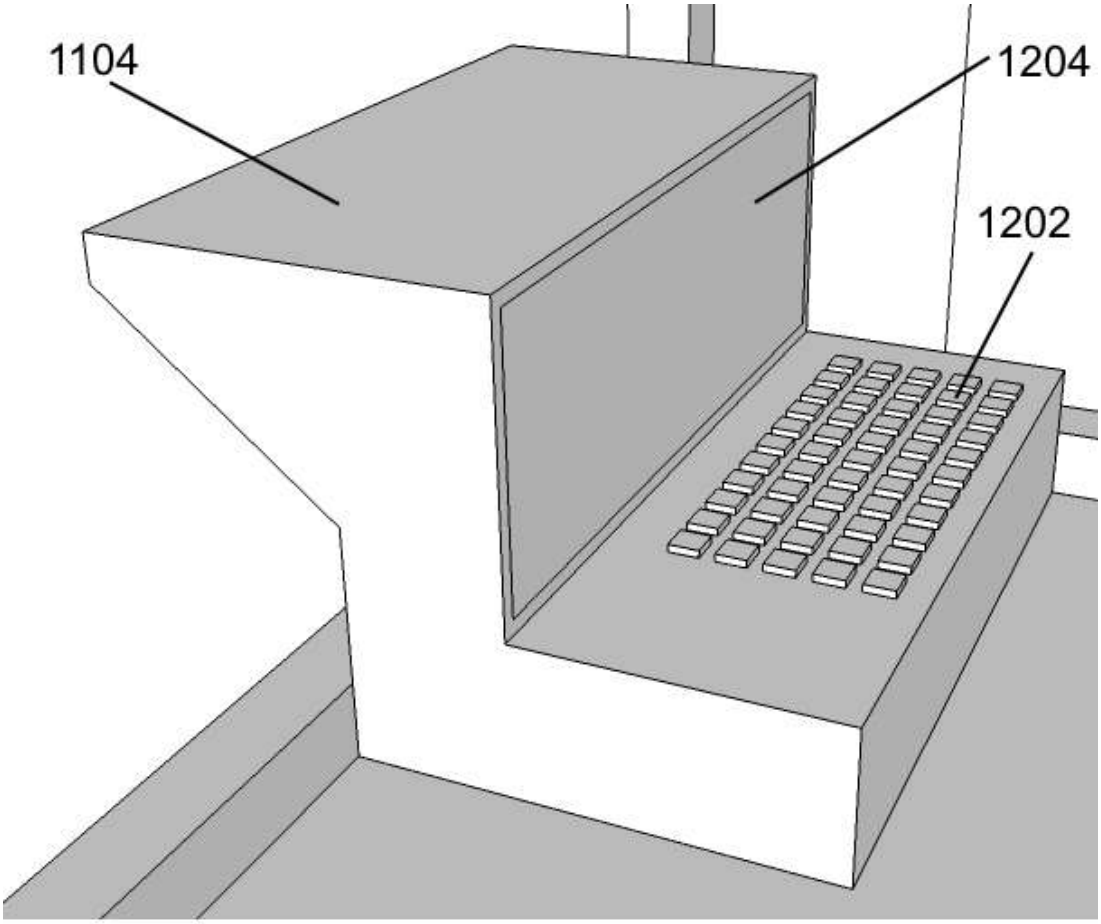

FIG. 12 (Prior Art)

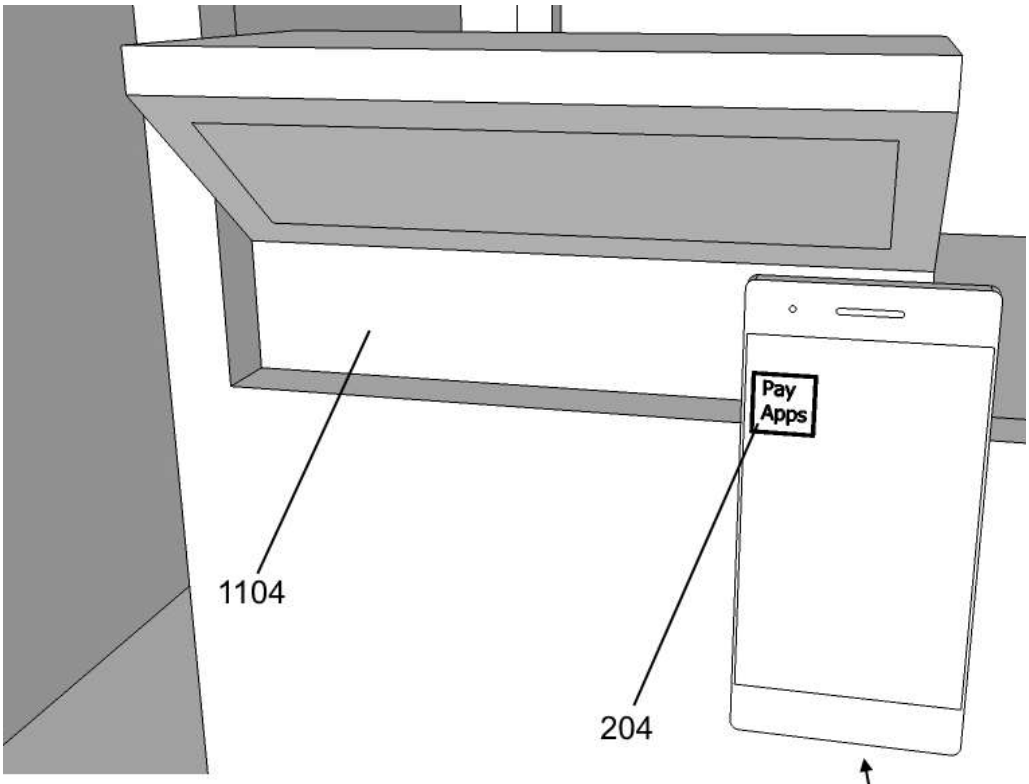

FIG. 13 (Prior Art)

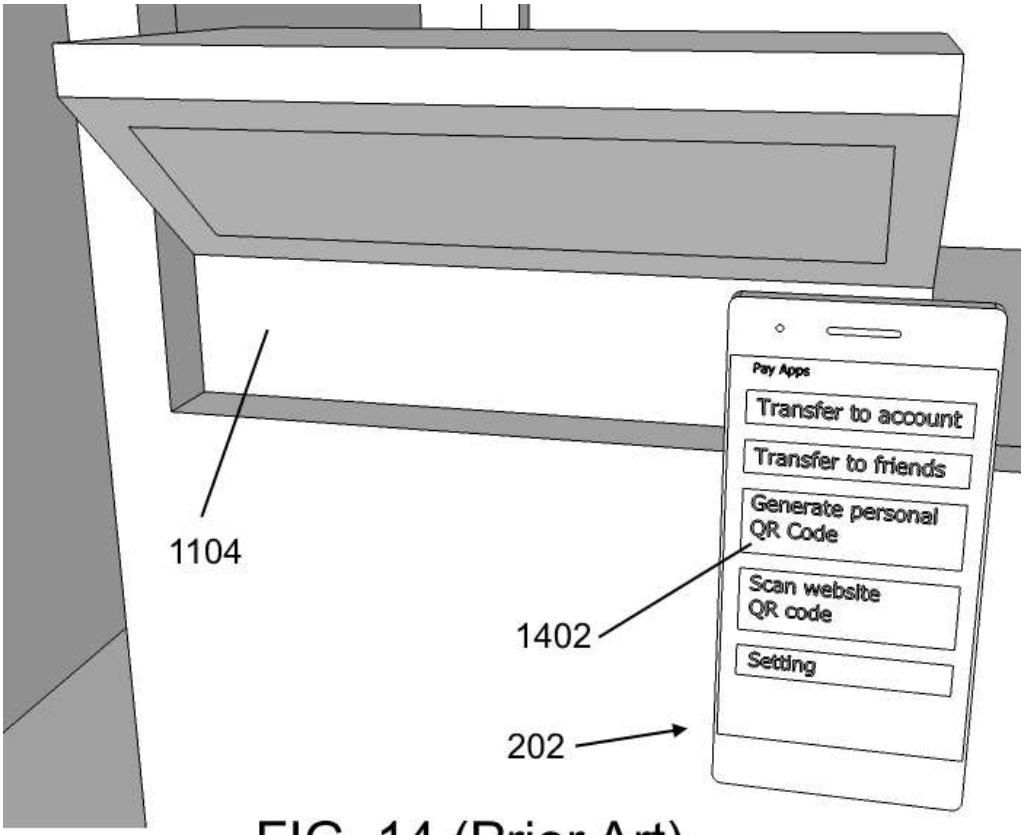

FIG. 14 (Prior Art)

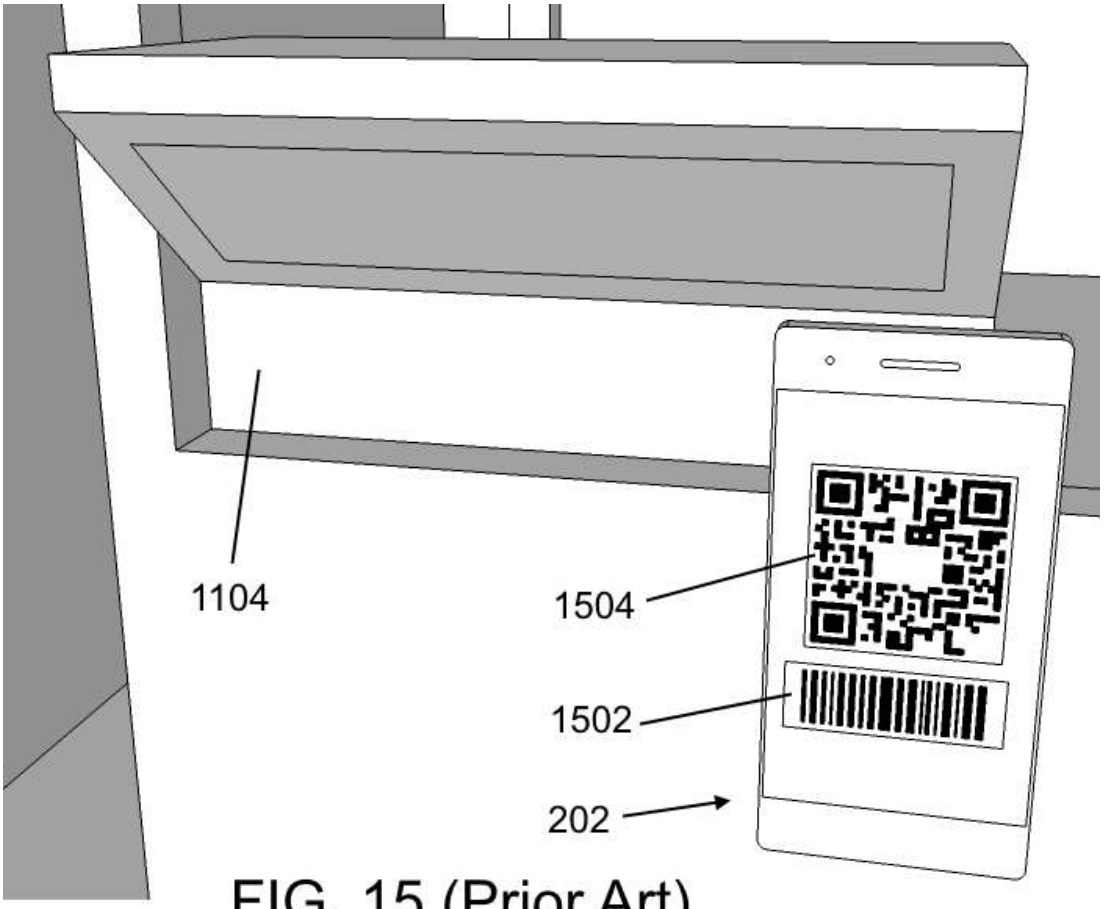

FIG. 15 (Prior Art)

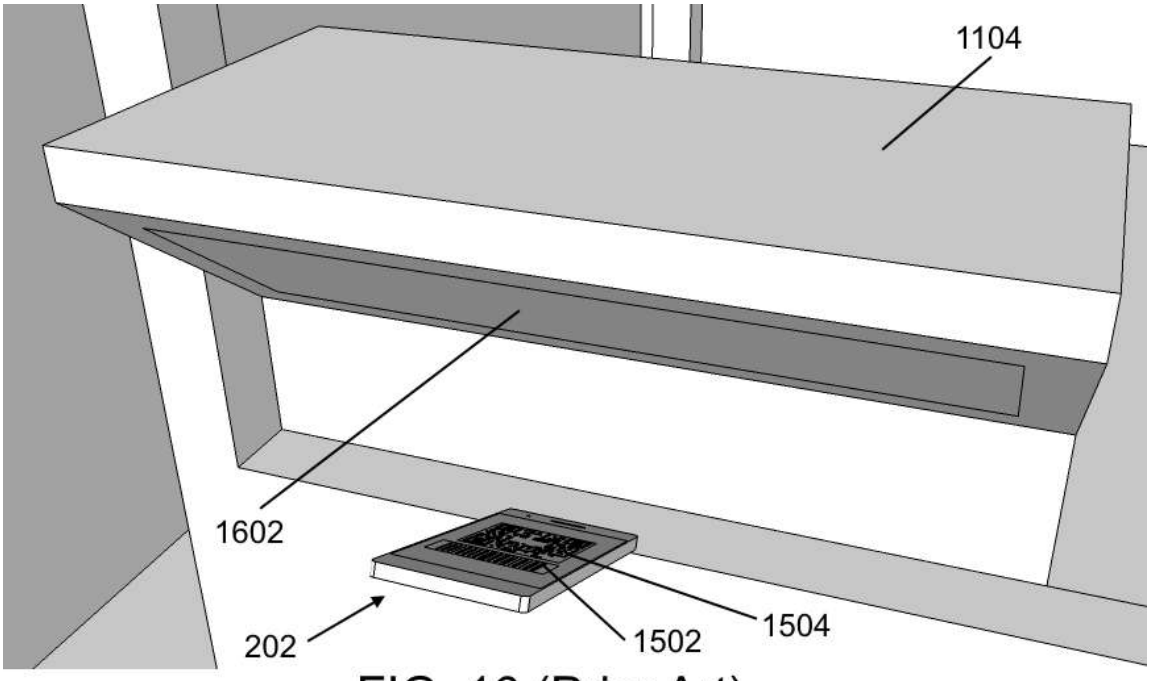

FIG. 16 (Prior Art)

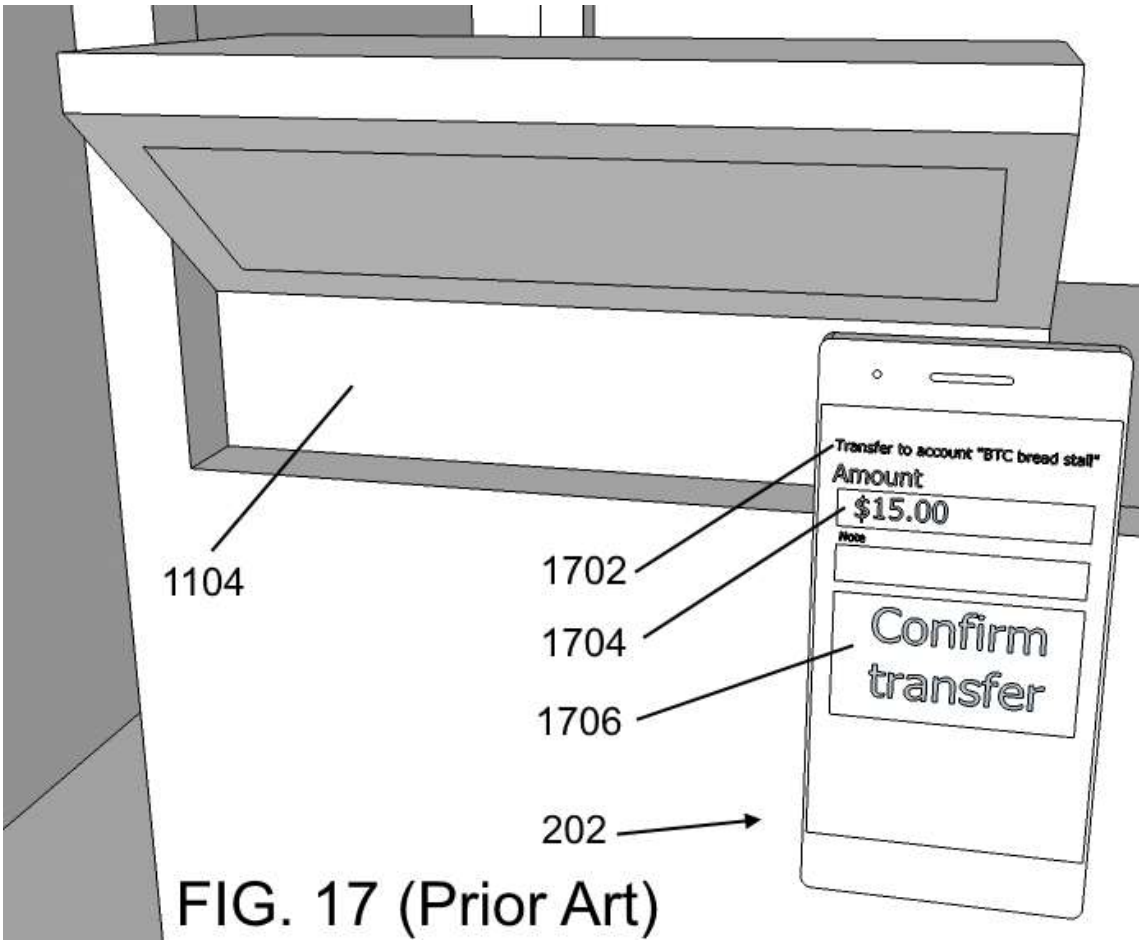

FIG. 17 (Prior Art)

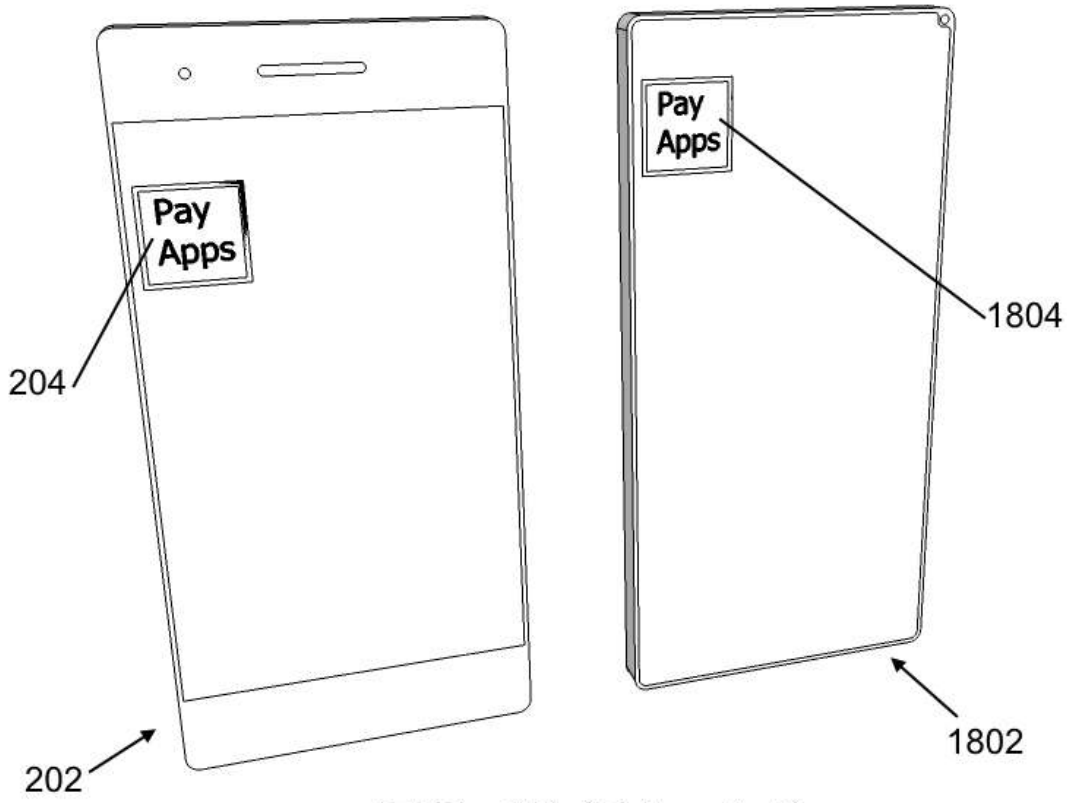

FIG. 18 (Prior Art)

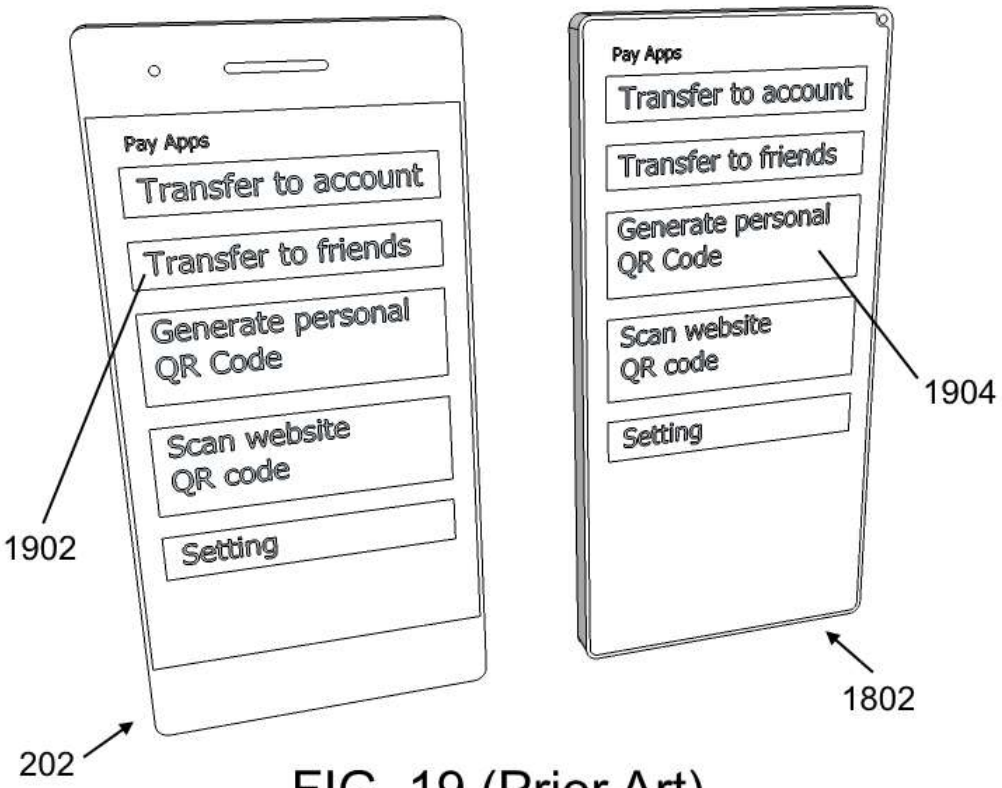

FIG. 19 (Prior Art)

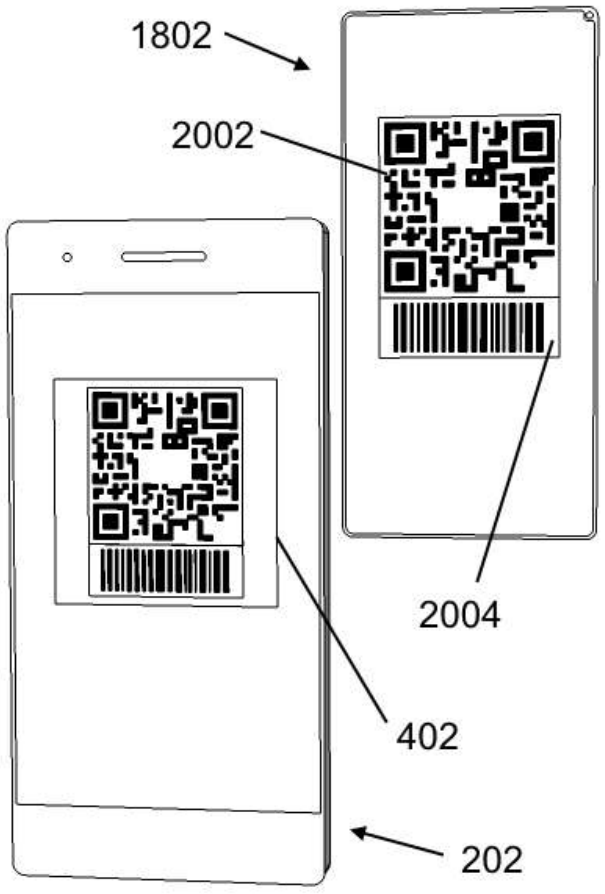

FIG. 20 (Prior Art)

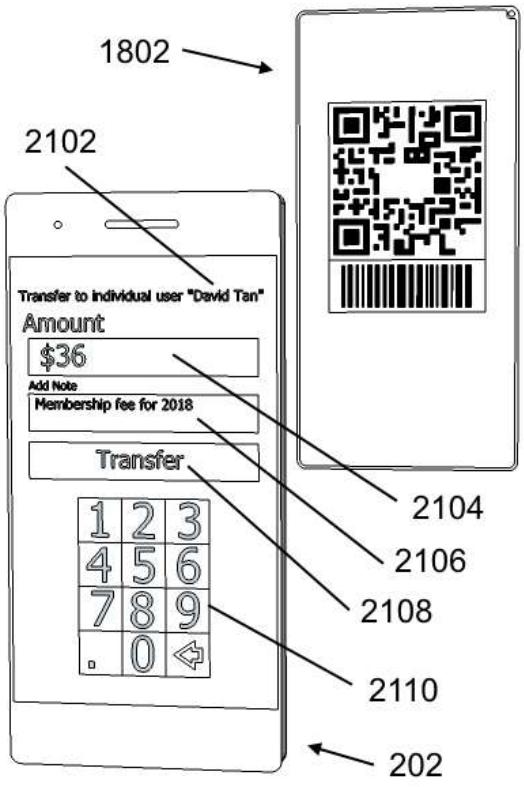

FIG. 21 (Prior Art)

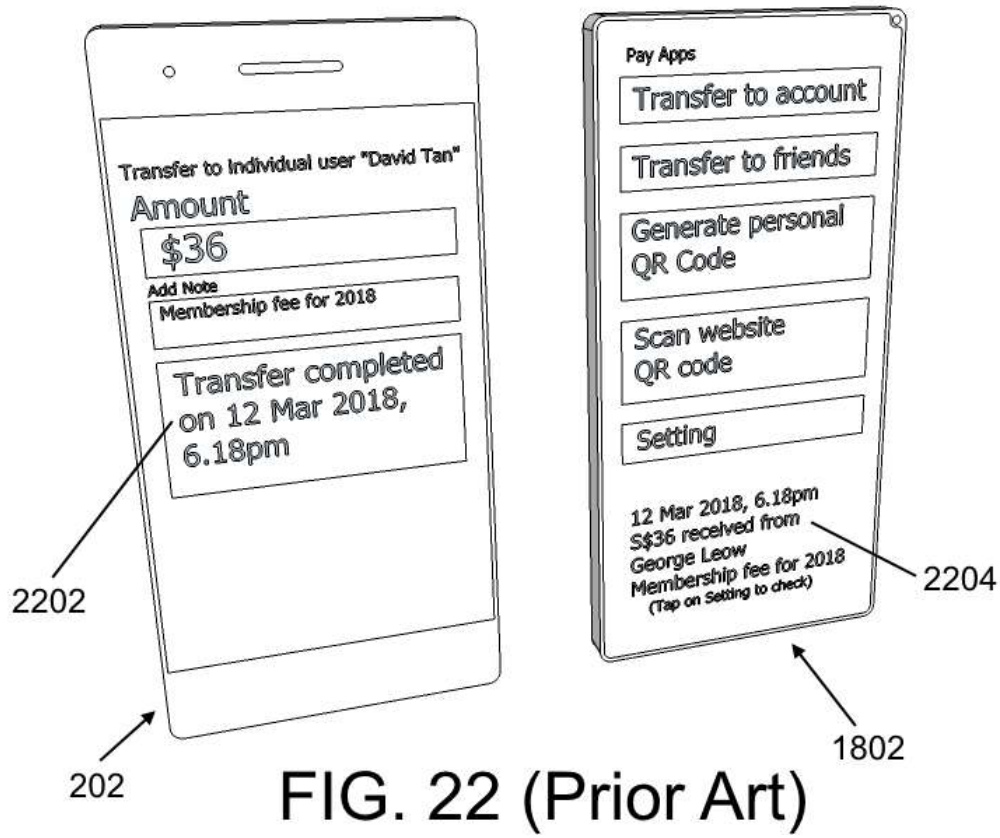

FIG. 22 (Prior Art)

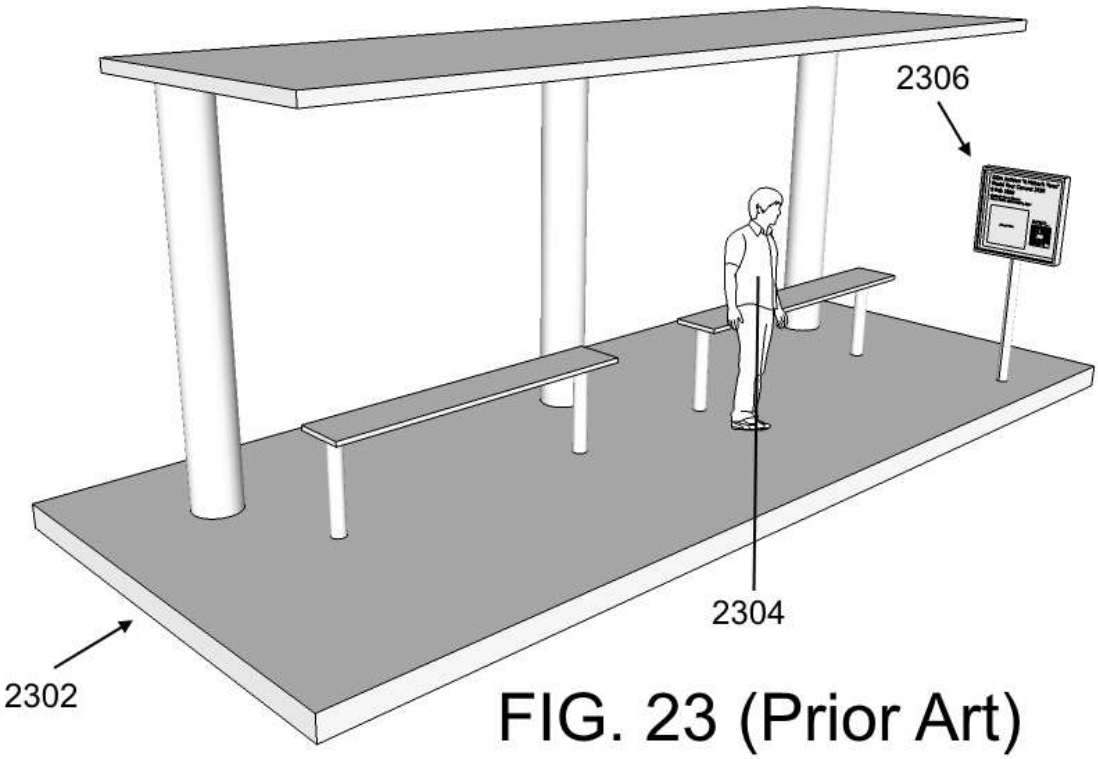

FIG. 23 (Prior Art)



FIG. 24 (Prior Art)

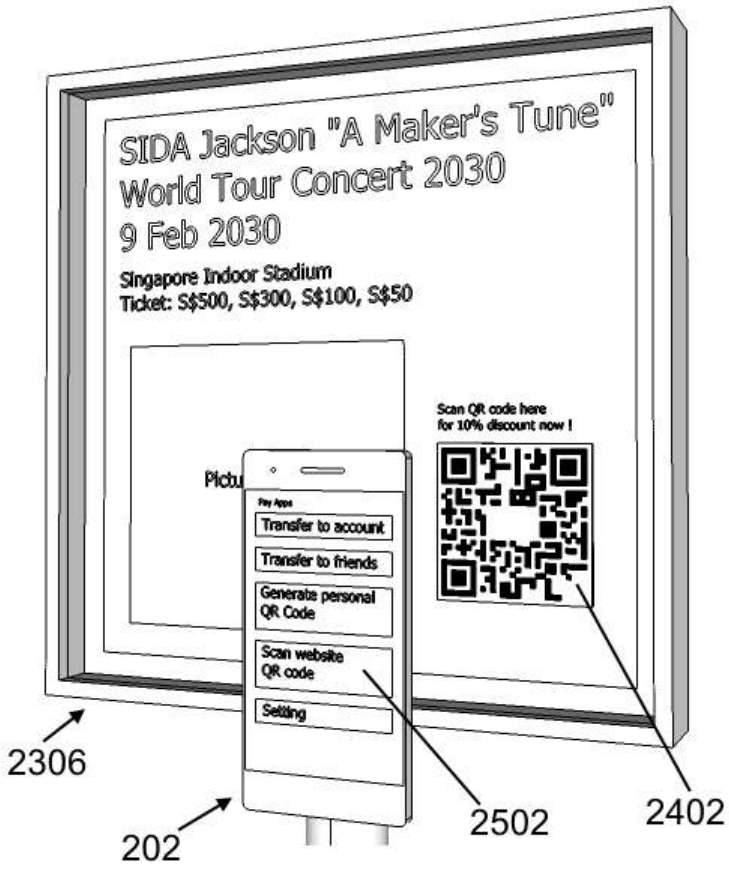

FIG. 25 (Prior Art)

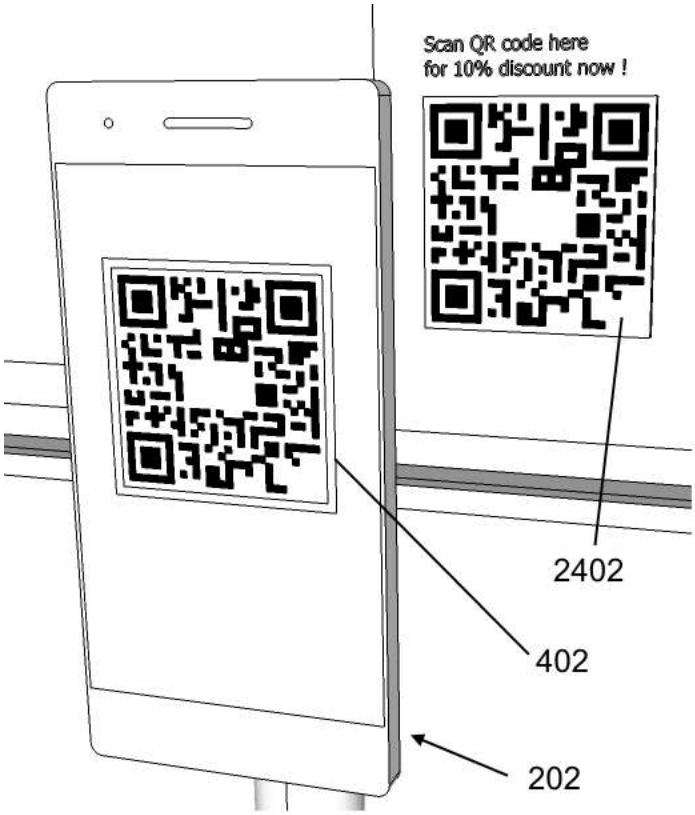

FIG. 26 (Prior Art)

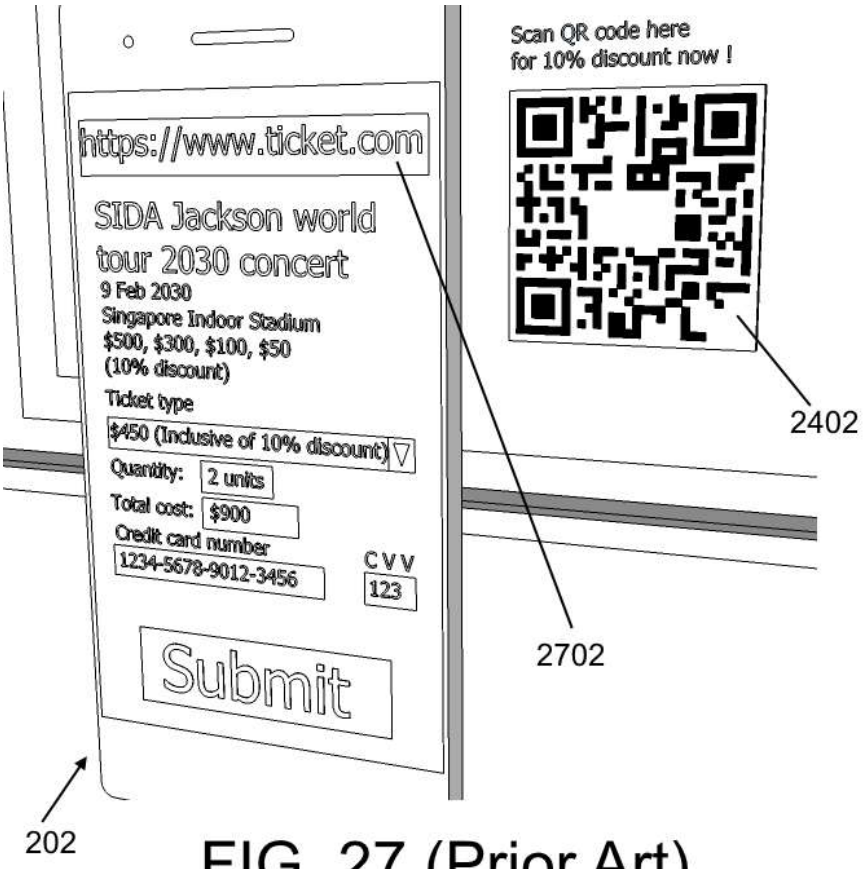

FIG. 27 (Prior Art)

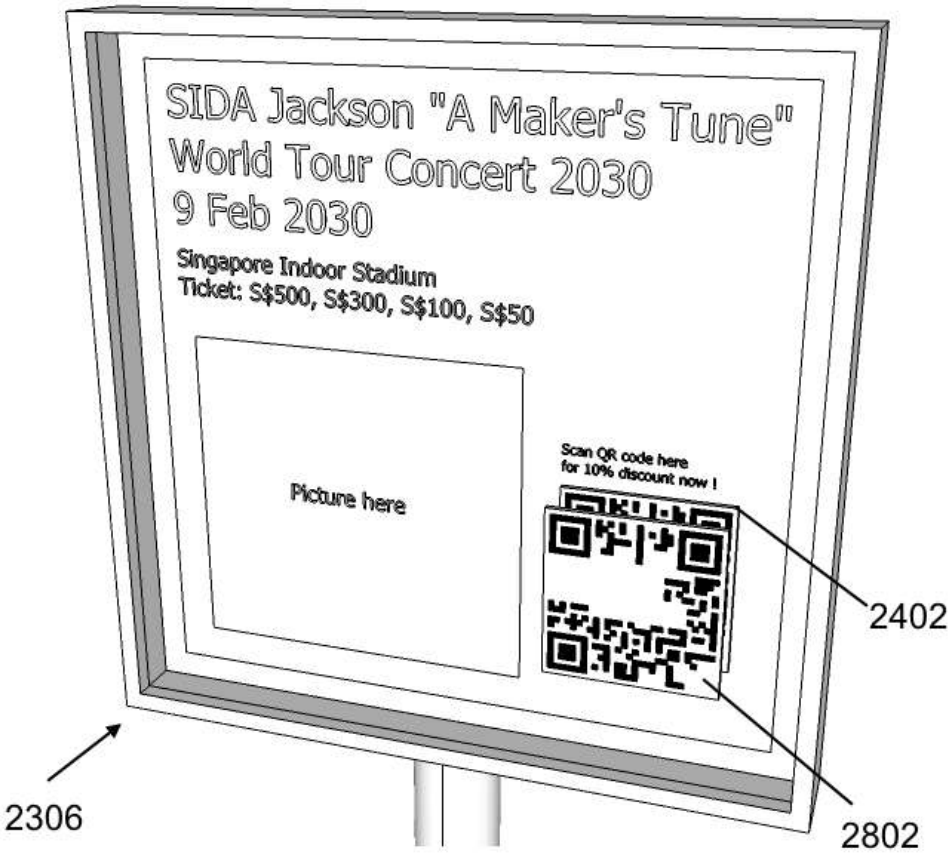

FIG. 28 (Prior Art)

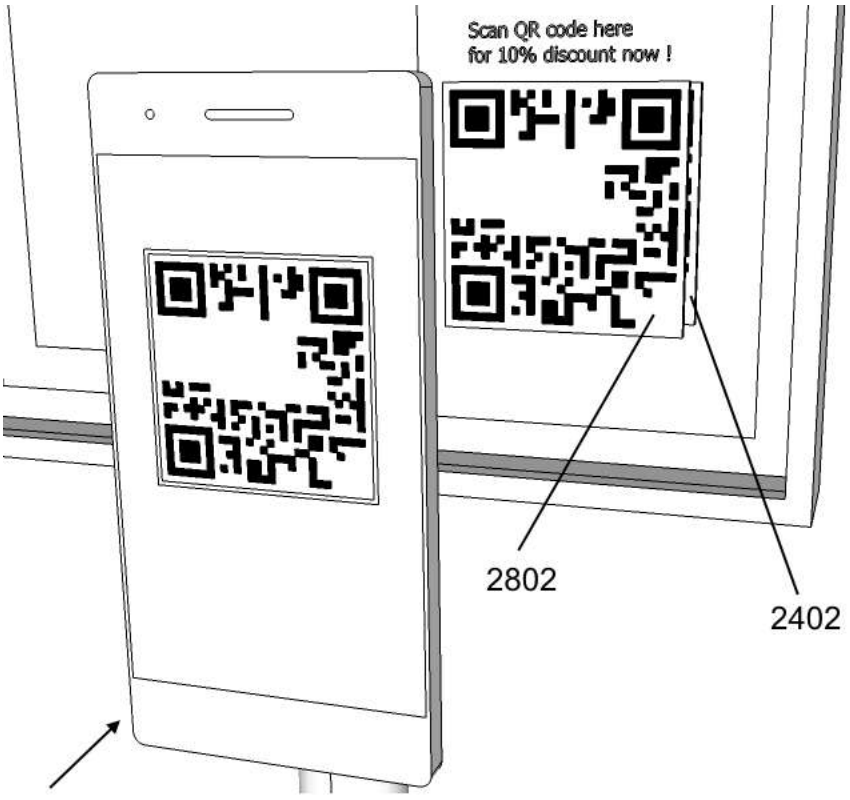

FIG. 29 (Prior Art)

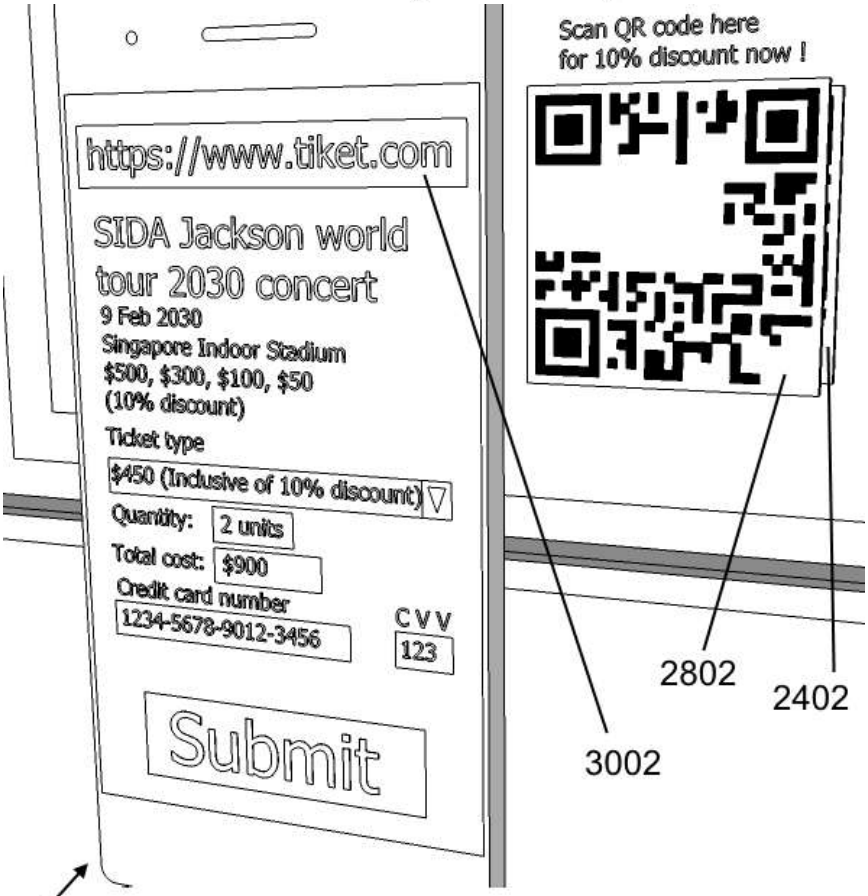

FIG. 30 (Prior Art)

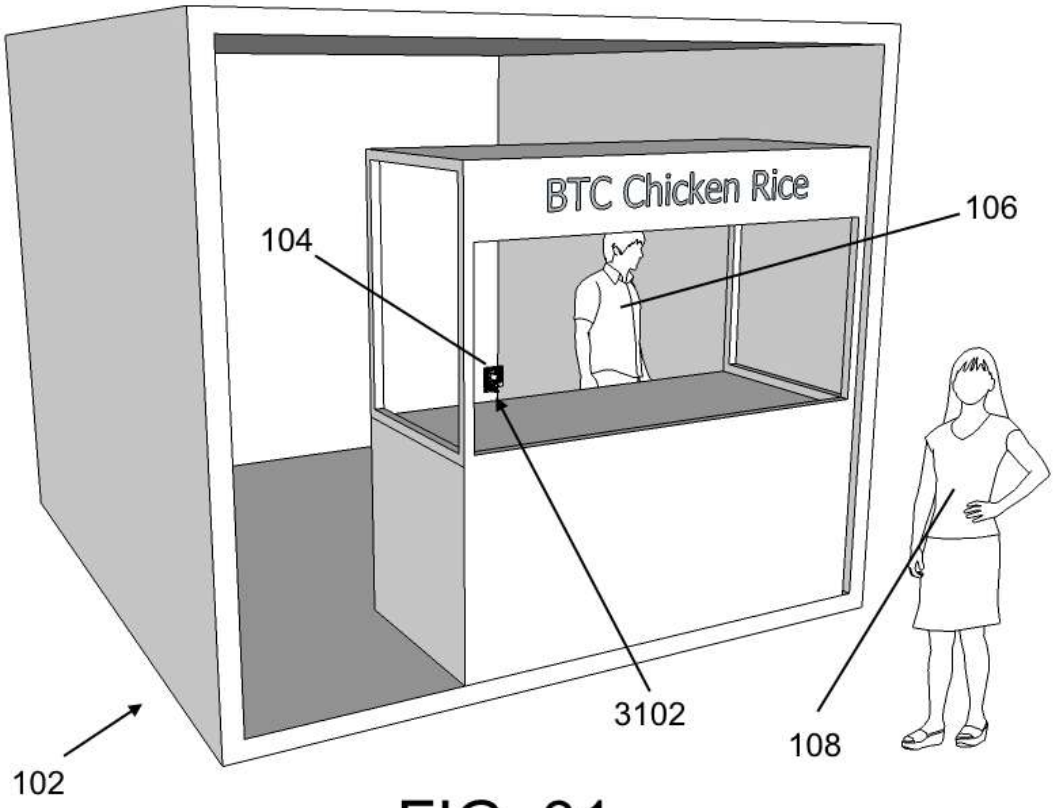

FIG. 31

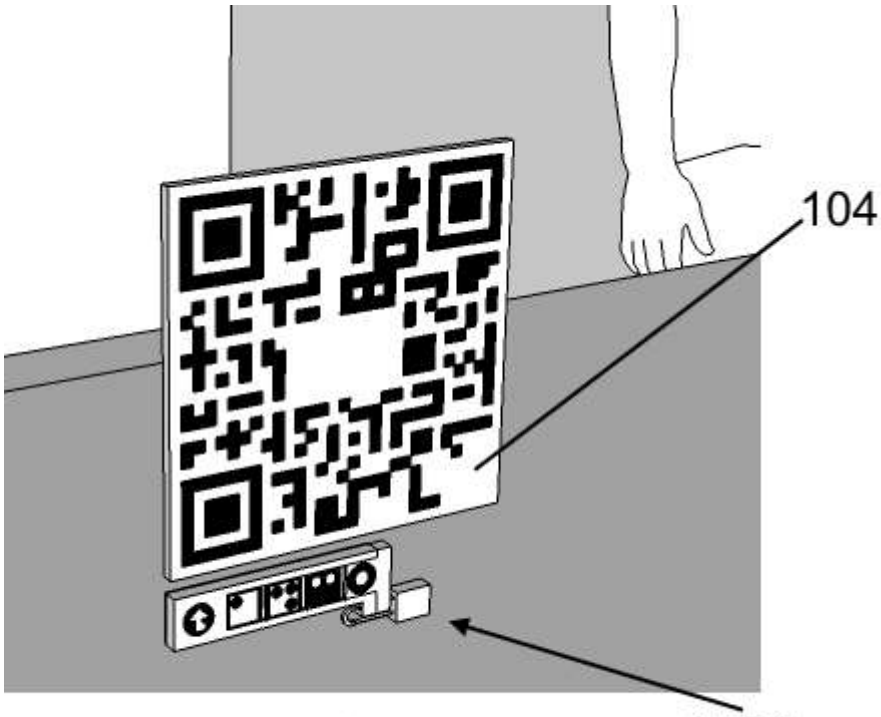

FIG. 32

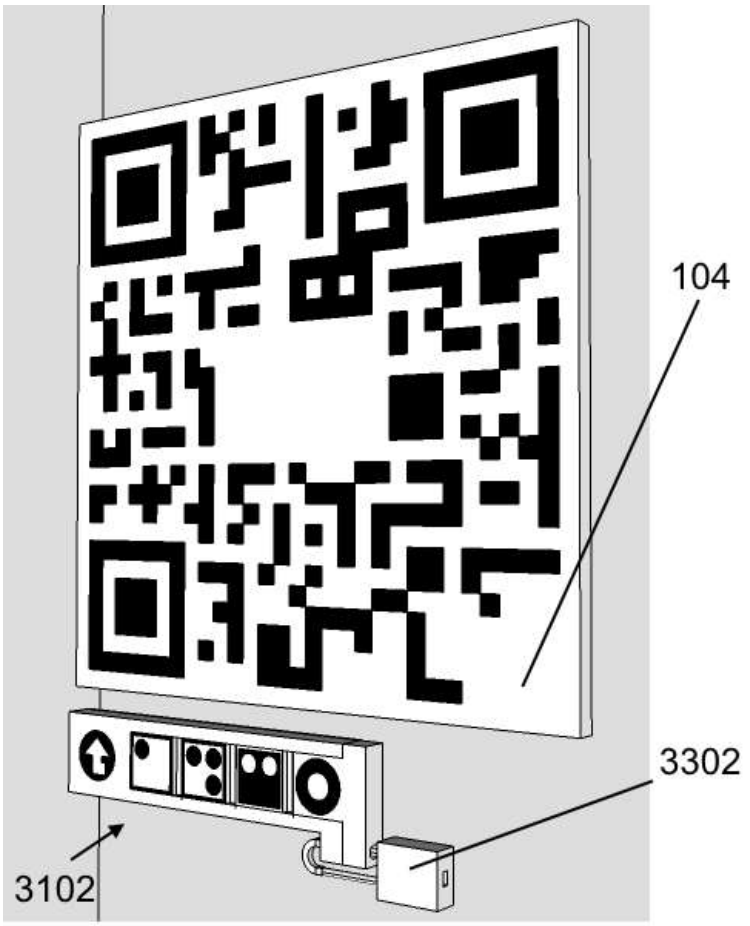

FIG. 33

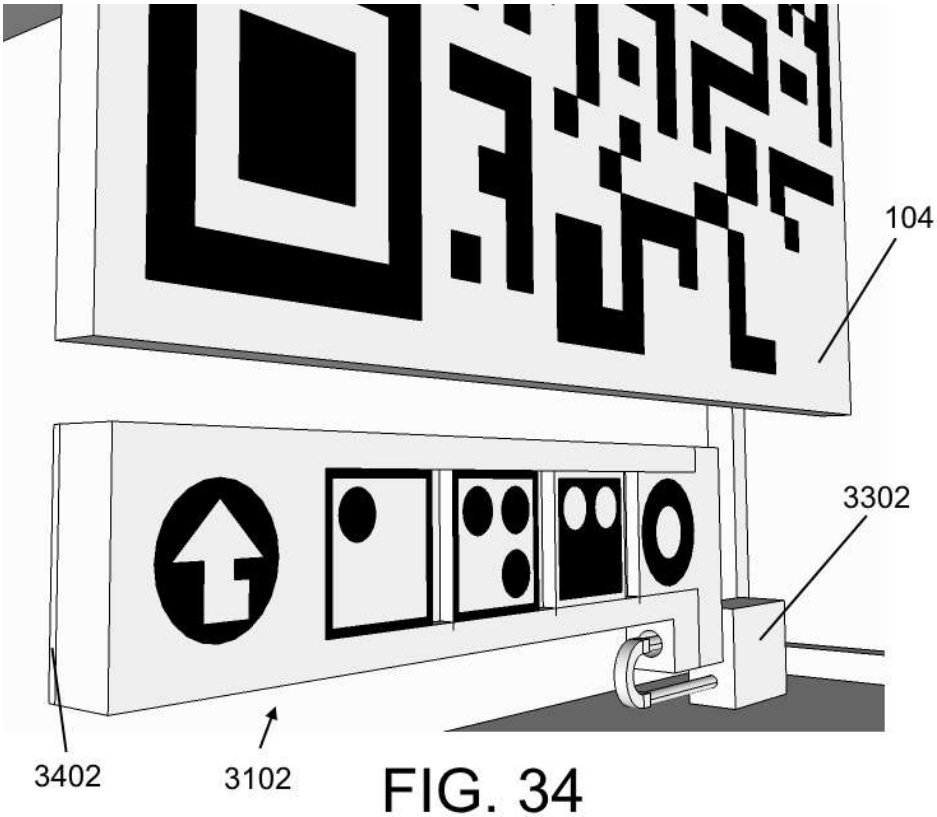

FIG. 34

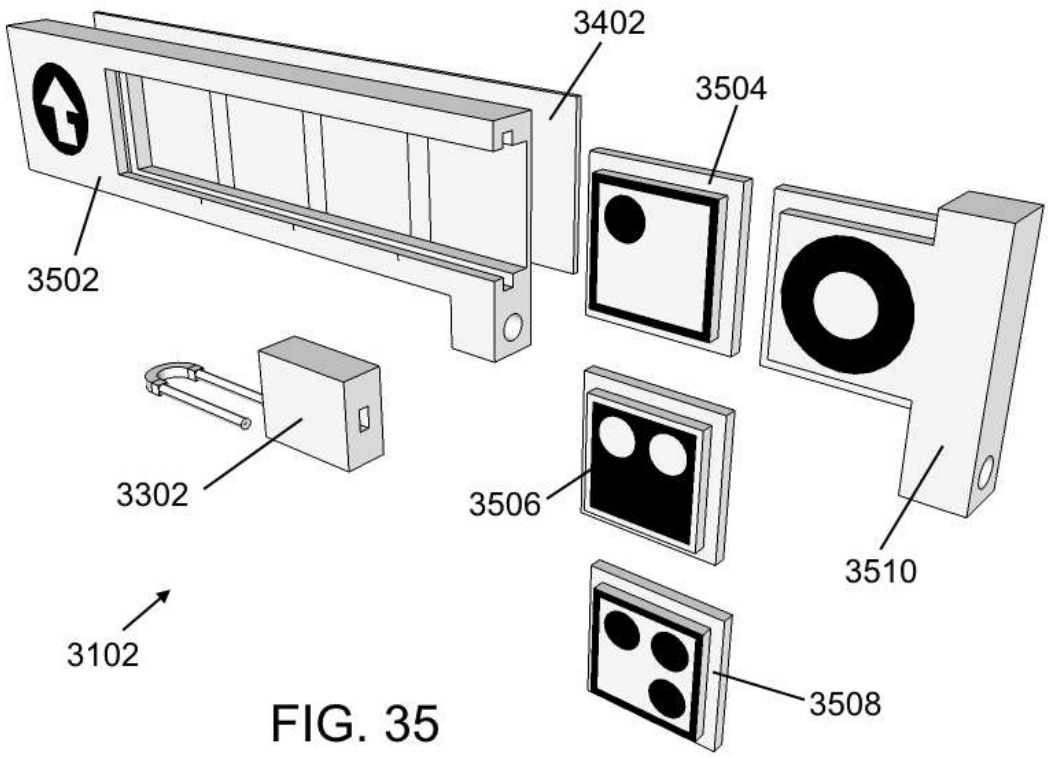
3402
3504
3502
3302
3506
3510
3102
3508

FIG. 35

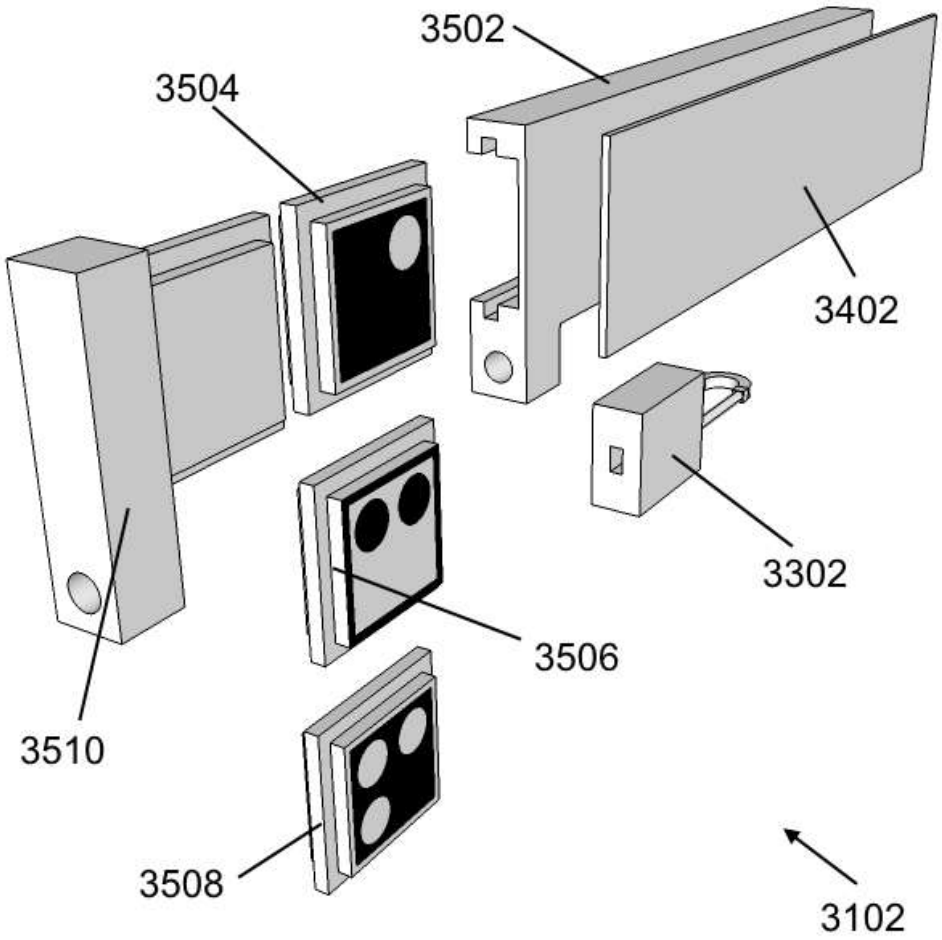
3502
3504
3402
3302
3506
3510
3508
3102

FIG. 36

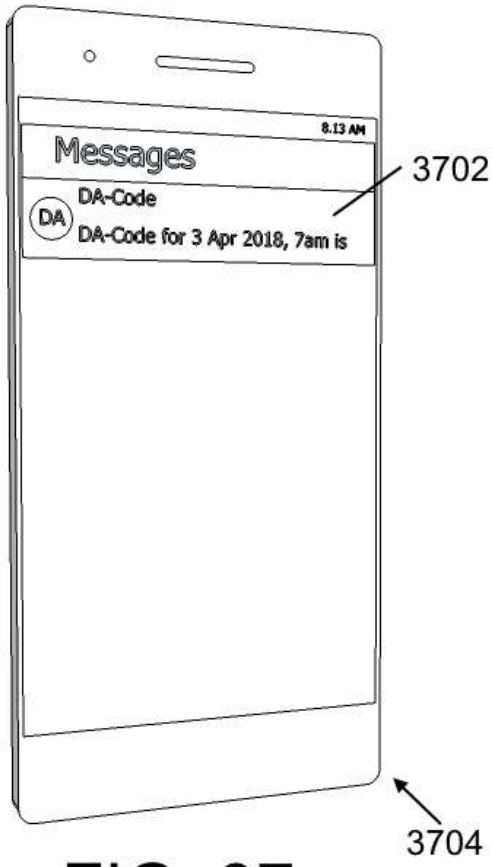
8.13 AM
Messages
DA-Code
DA
DA-Code for 3 Apr 2018, 7am is
3702
3704

FIG. 37

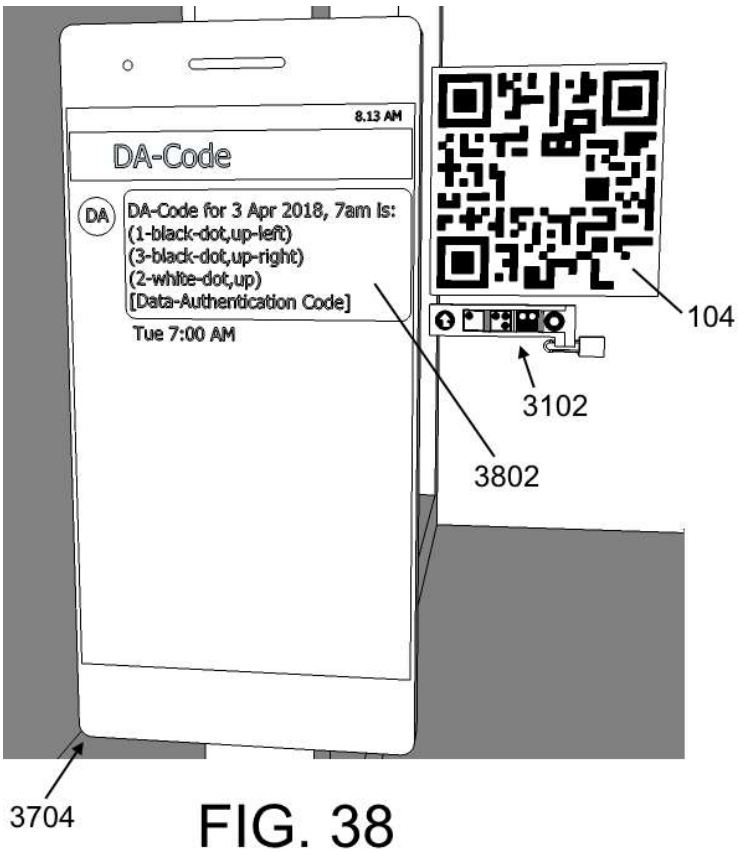
8.13 AM
DA-Code
DA
DA-Code for 3 Apr 2018, 7am is:
(1-black-dot,up-left)
(3-black-dot,up-right)
(2-white-dot,up)
[Data-Authentication Code]
Tue 7:00 AM
104
3102
3802
3704

FIG. 38

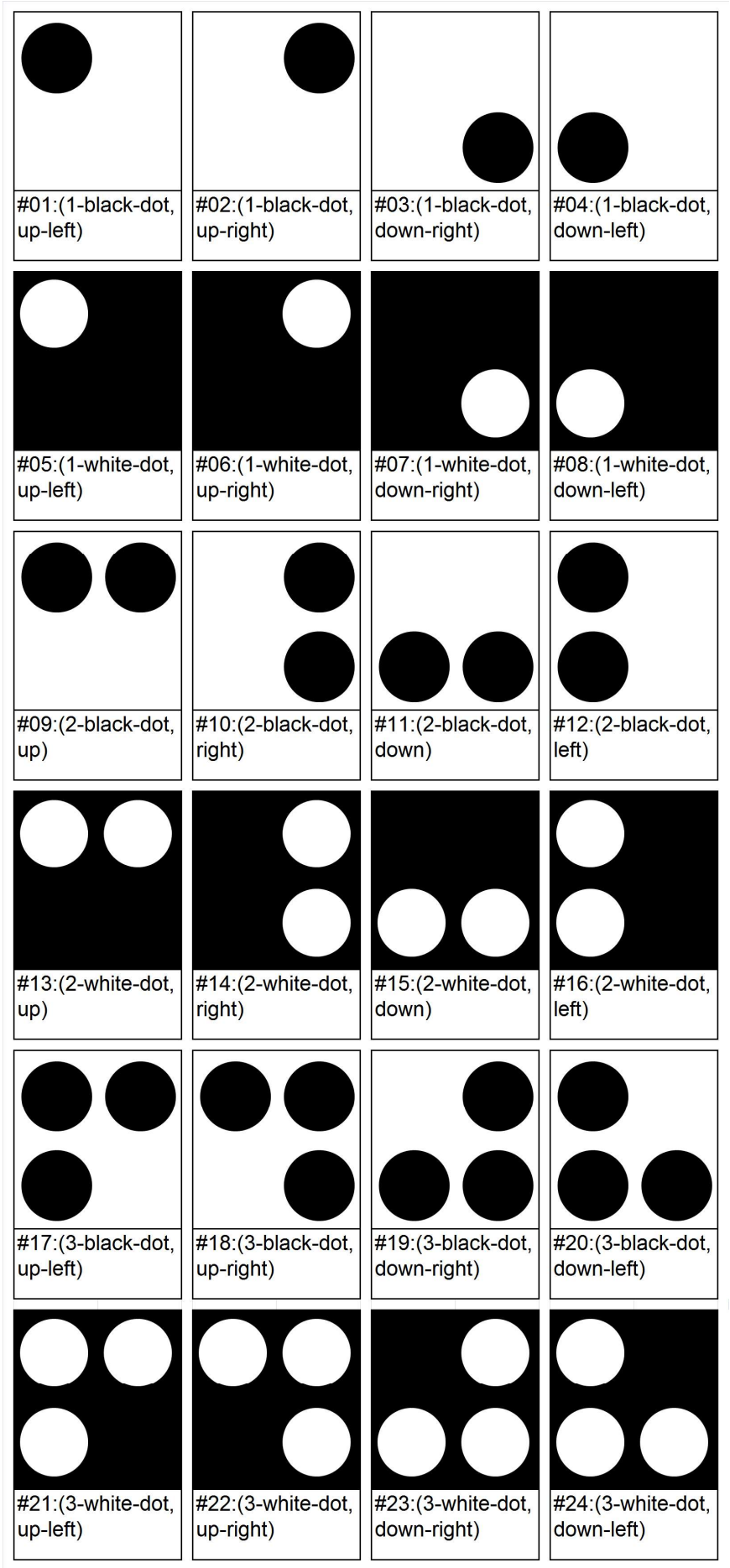
#01:(1-black-dot, up-left)
#02:(1-black-dot, up-right)
#03:(1-black-dot, down-right)
#04:(1-black-dot, down-left)
#05:(1-white-dot, up-left)
#06:(1-white-dot, up-right)
#07:(1-white-dot, down-right)
#08:(1-white-dot, down-left)
#09:(2-black-dot, up)
#10:(2-black-dot, right)
#11:(2-black-dot, down)
#12:(2-black-dot, left)
#13:(2-white-dot, up)
#14:(2-white-dot, right)
#15:(2-white-dot, down)
#16:(2-white-dot, left)
#17:(3-black-dot, up-left)
#18:(3-black-dot, up-right)
#19:(3-black-dot, down-right)
#20:(3-black-dot, down-left)
#21:(3-white-dot, up-left)
#22:(3-white-dot, up-right)
#23:(3-white-dot, down-right)
#24:(3-white-dot, down-left)

FIG. 39

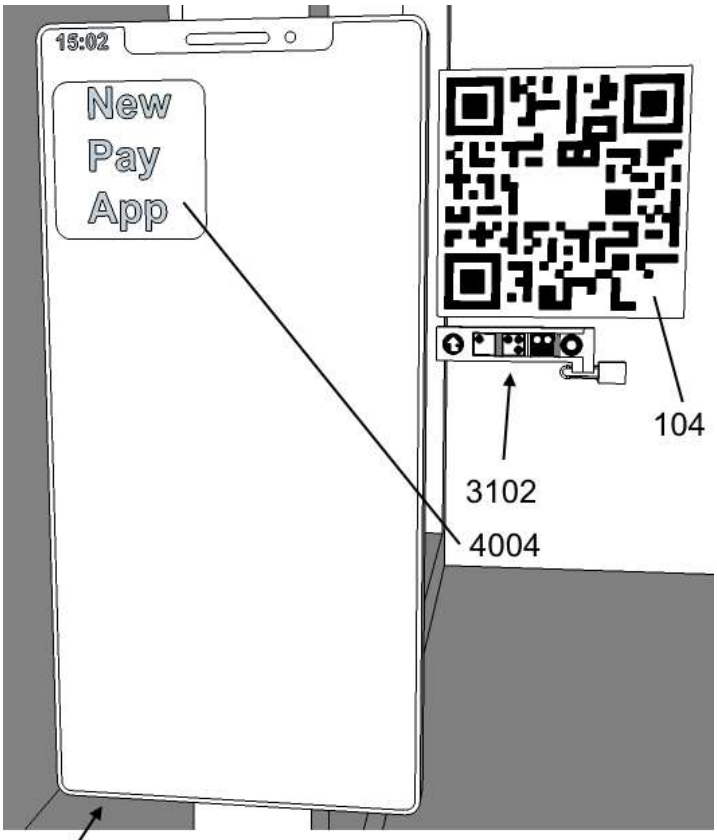
15:02
New
Pay
App
104
3102
4004
4002

FIG. 40

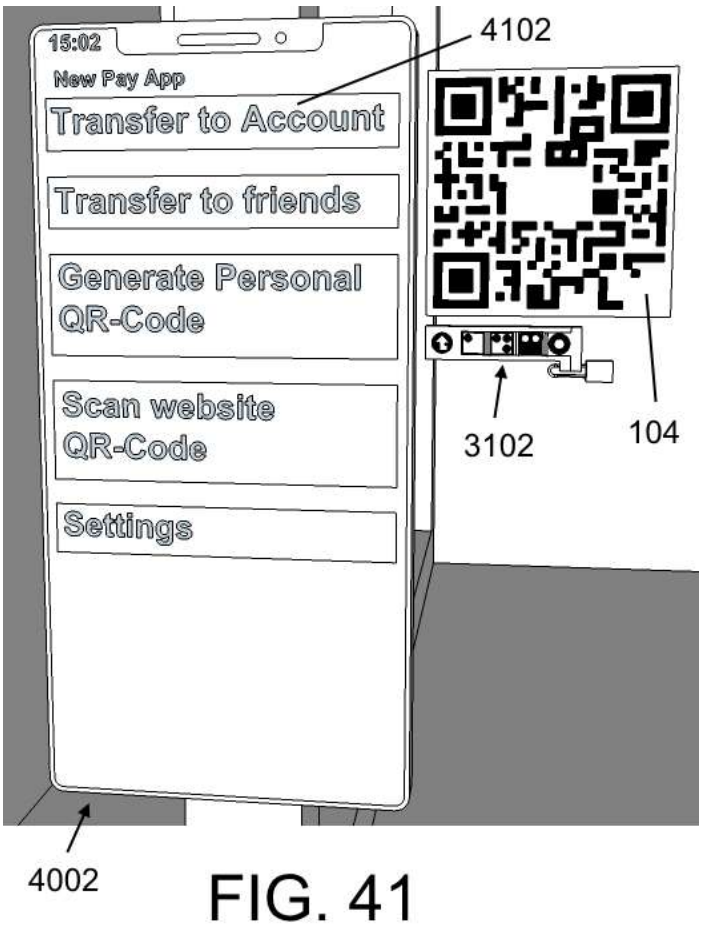
15:02
New Pay App
4102
Transfer to Account
Transfer to friends
Generate Personal QR-Code
Scan website QR-Code
Settings
3102
104
4002

FIG. 41

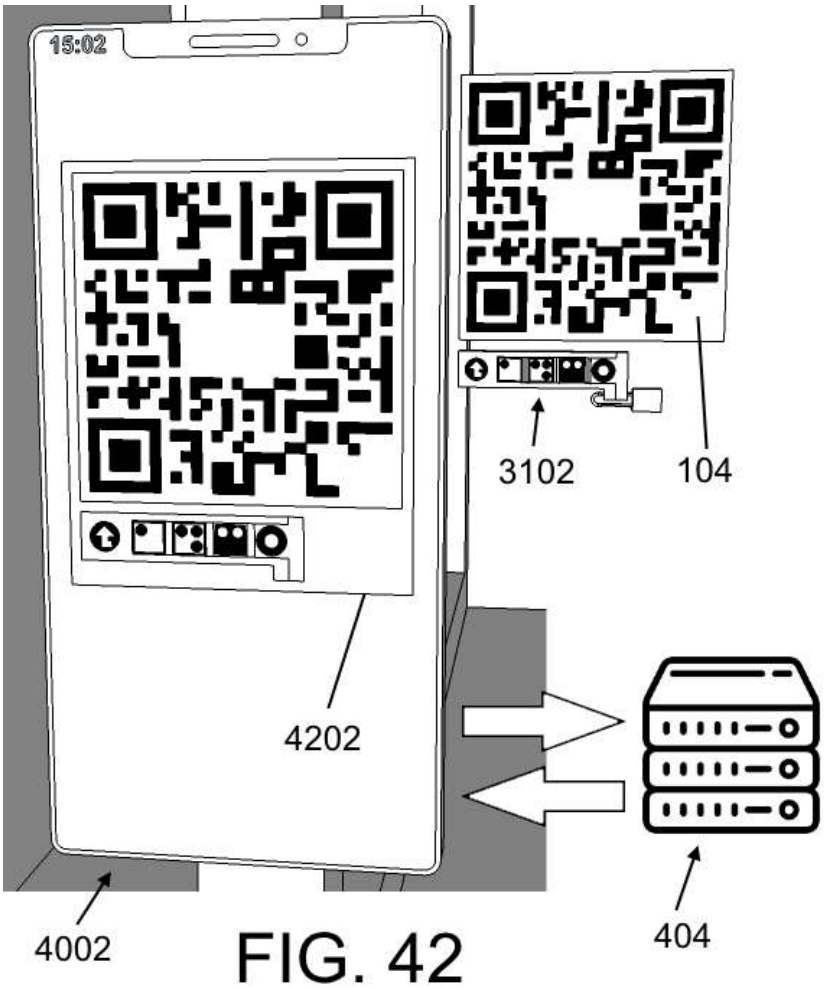
15:02
3102
104
4202
4002
404

FIG. 42

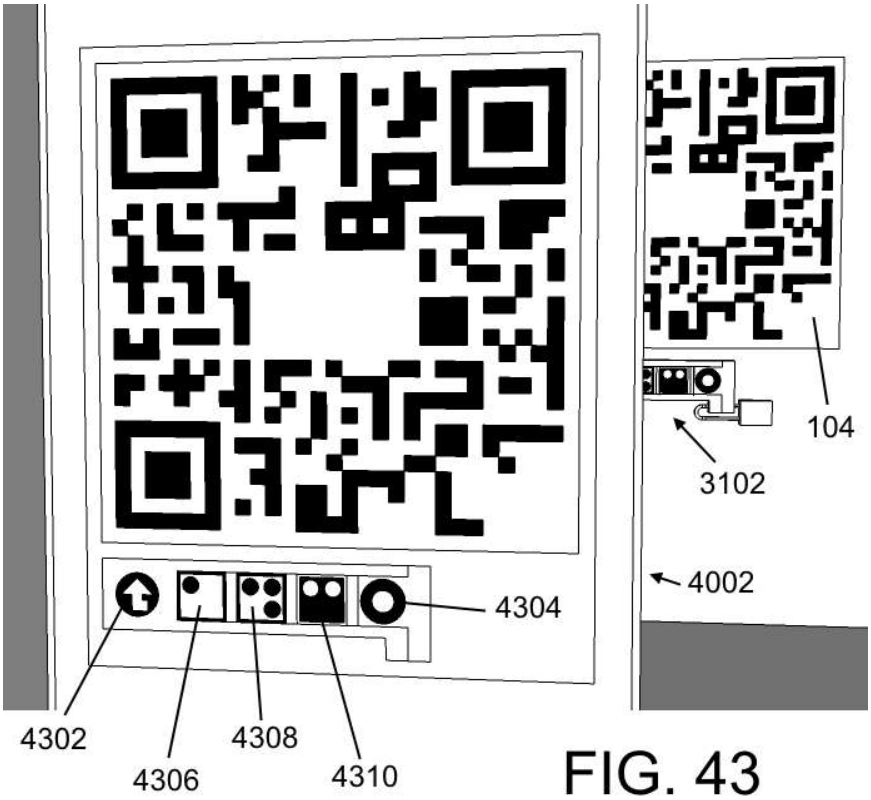
104
3102
4002
4304
4302
4306
4308
4310

FIG. 43

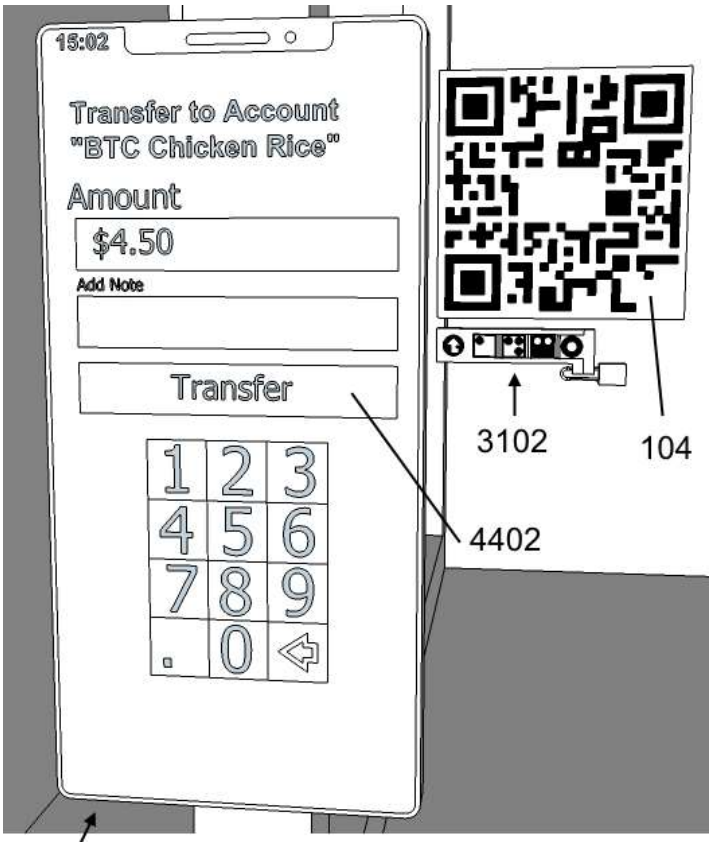
15:02
Transfer to Account
"BTC Chicken Rice"
Amount
$4.50
Add Note
Transfer
1 2 3
4 5 6
7 8 9
. 0
3102
104
4402
4002

FIG. 44

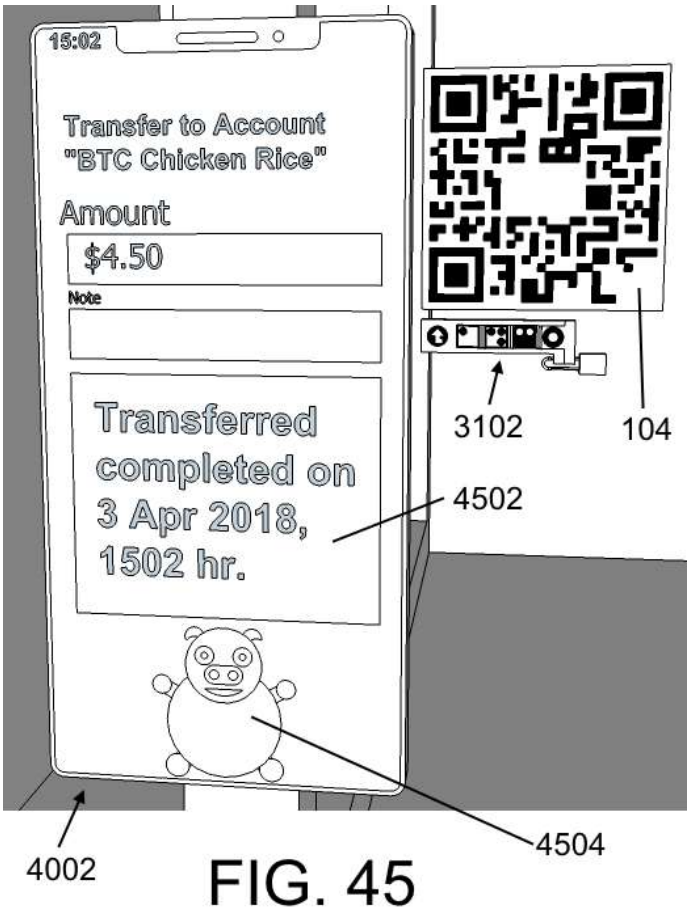
15:02
Transfer to Account
"BTC Chicken Rice"
Amount
$4.50
Note
Transferred completed on 3 Apr 2018, 1502 hr.
3102
104
4502
4504
4002

FIG. 45

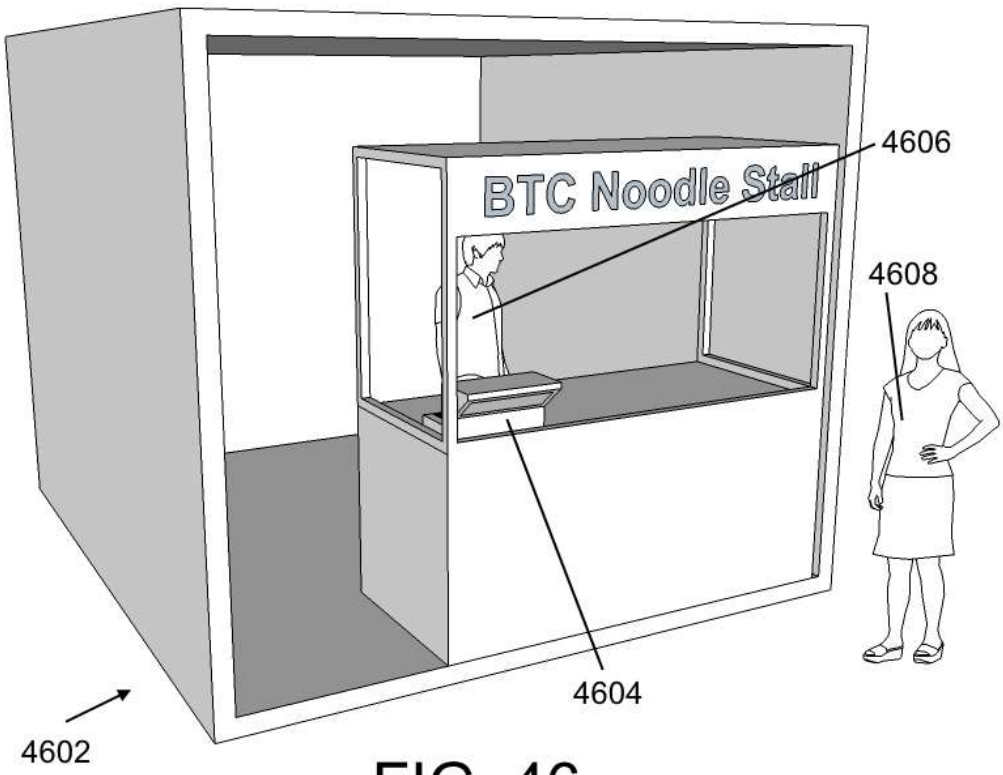
BTC Noodle Stall
4606
4608
4604
4602

FIG. 46

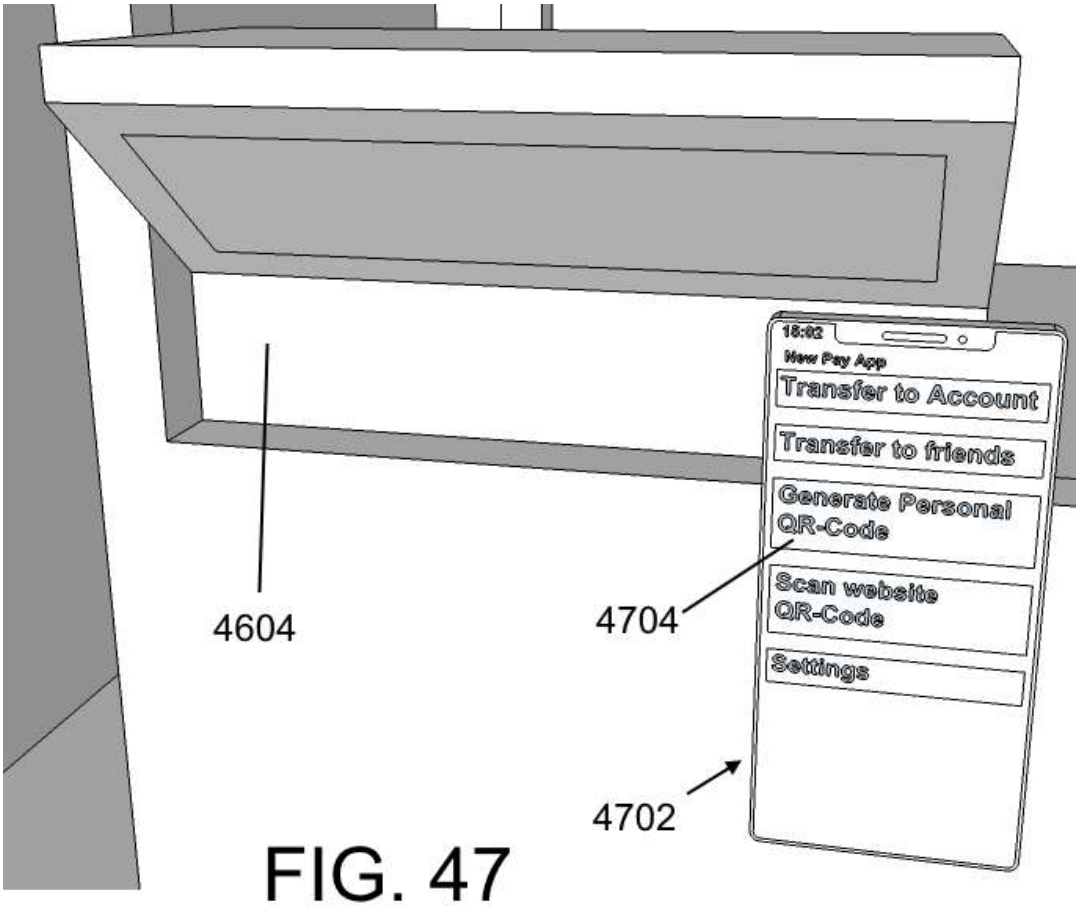
18:02
New Pay App
Transfer to Account
Transfer to friends
Generate Personal QR-Code
Scan website QR-Code
Settings
4604
4704
4702

FIG. 47

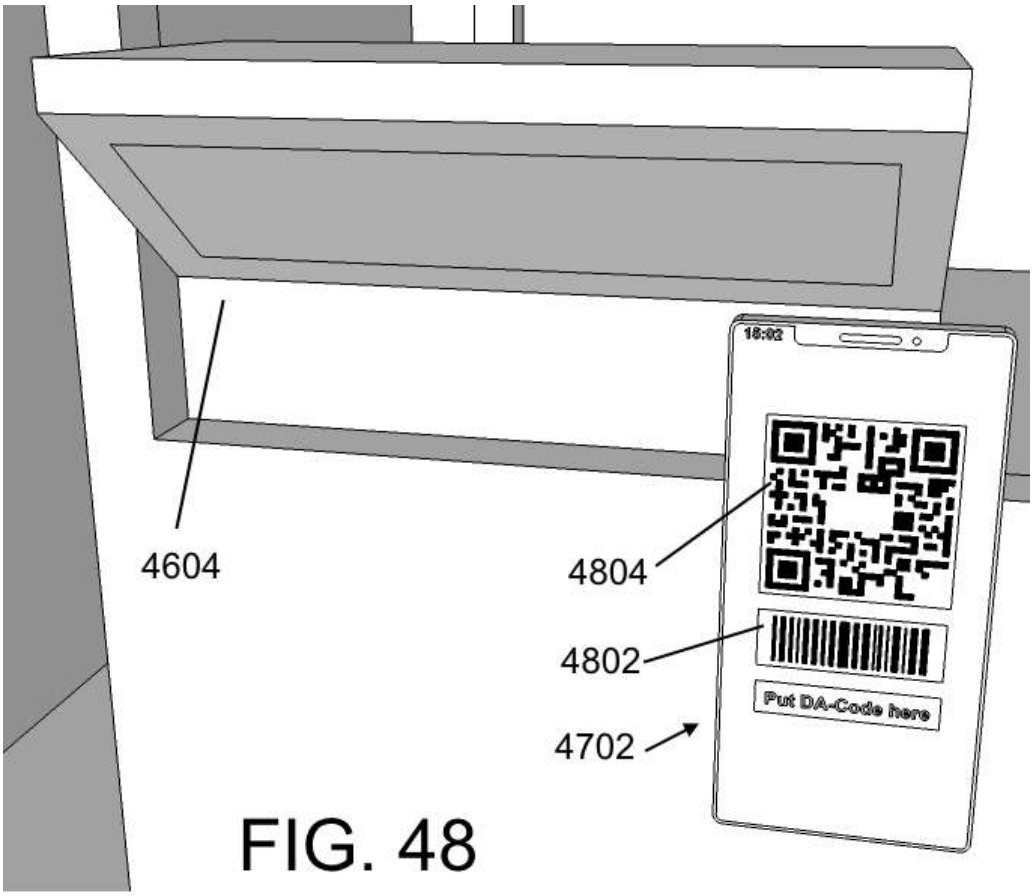

FIG. 48

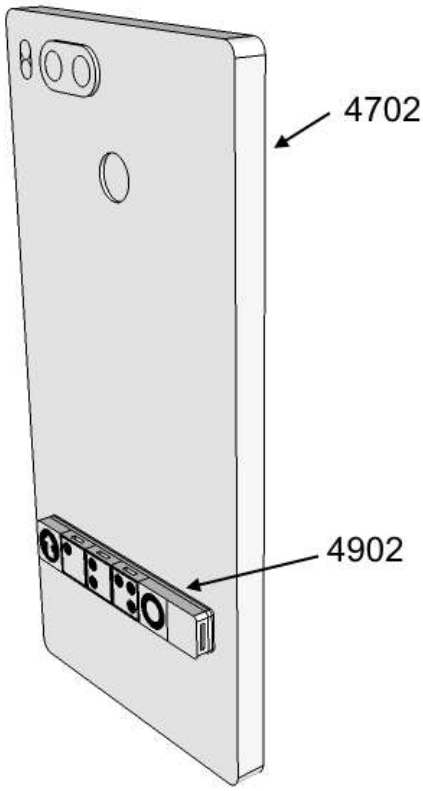

FIG. 49

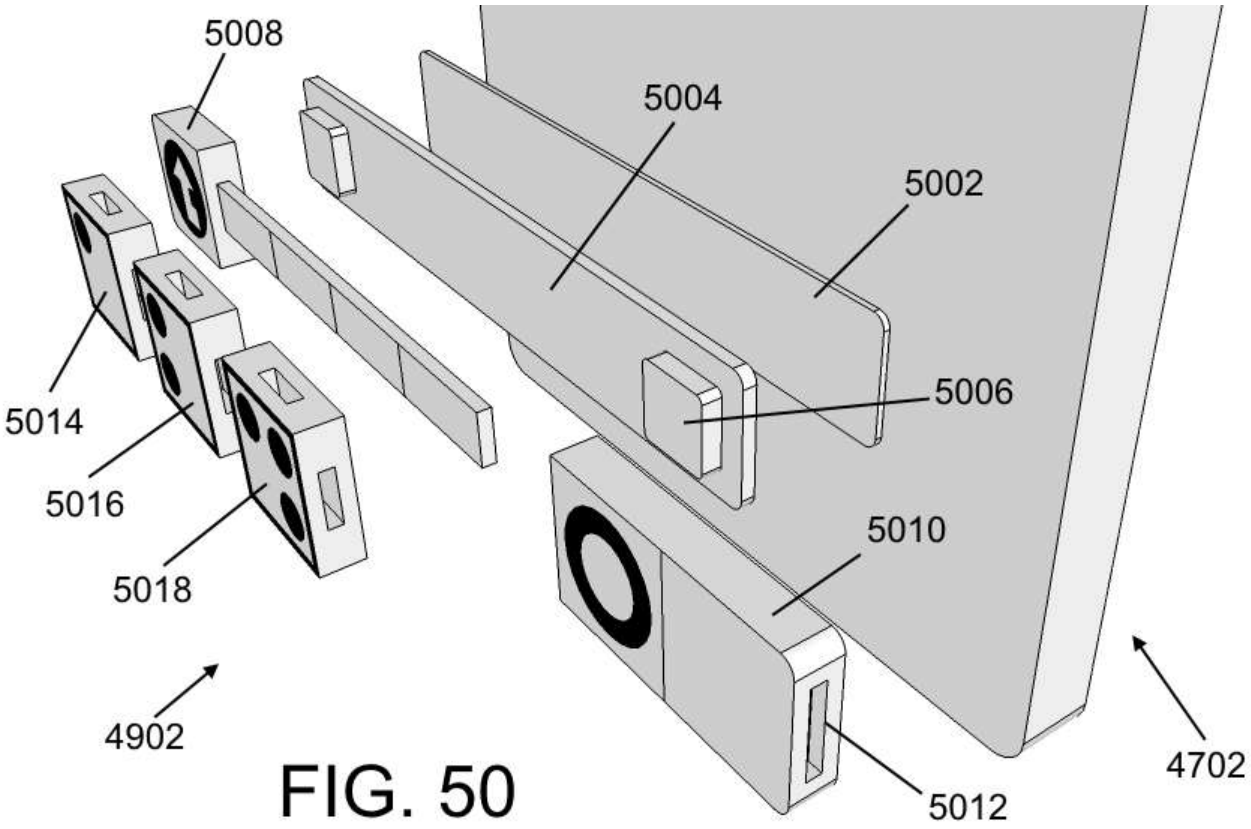
5008
5004
5002
5006
5014
5016
5018
5010
4902
5012
4702

FIG. 50

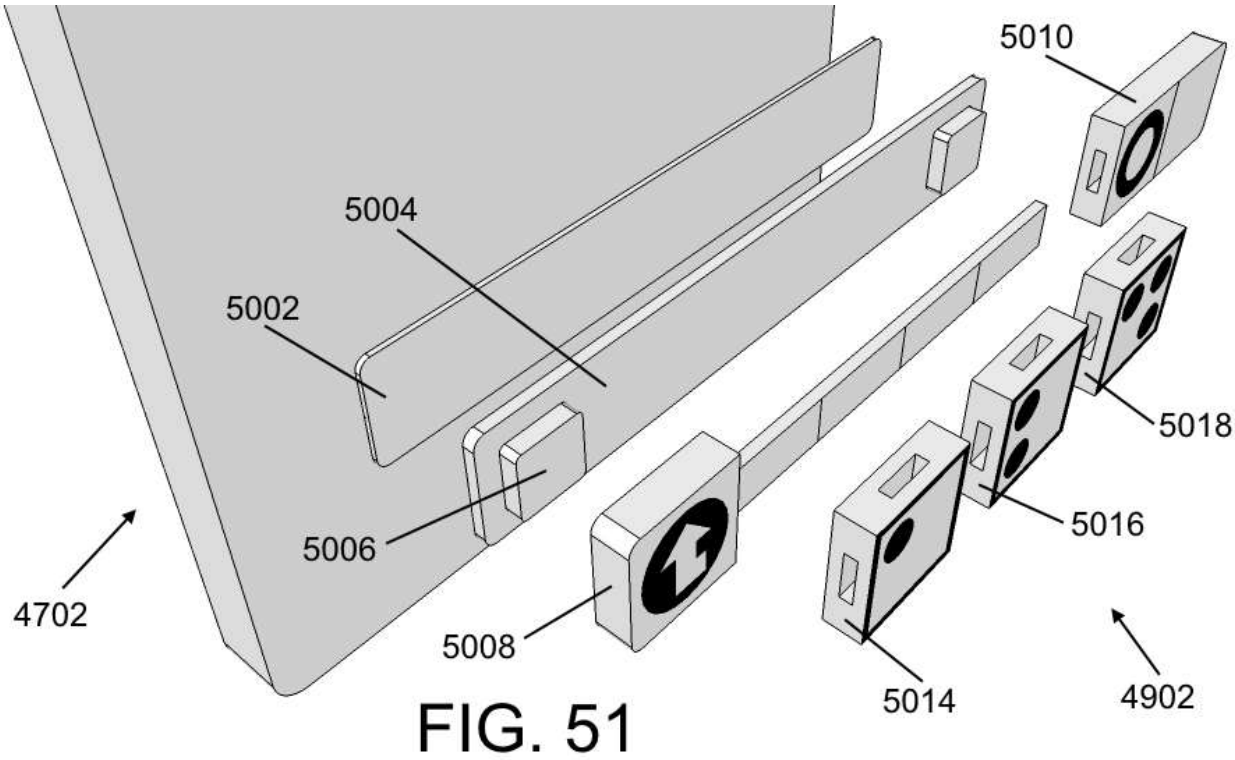
5010
5004
5002
5018
5006
5016
4702
5008
5014
4902

FIG. 51

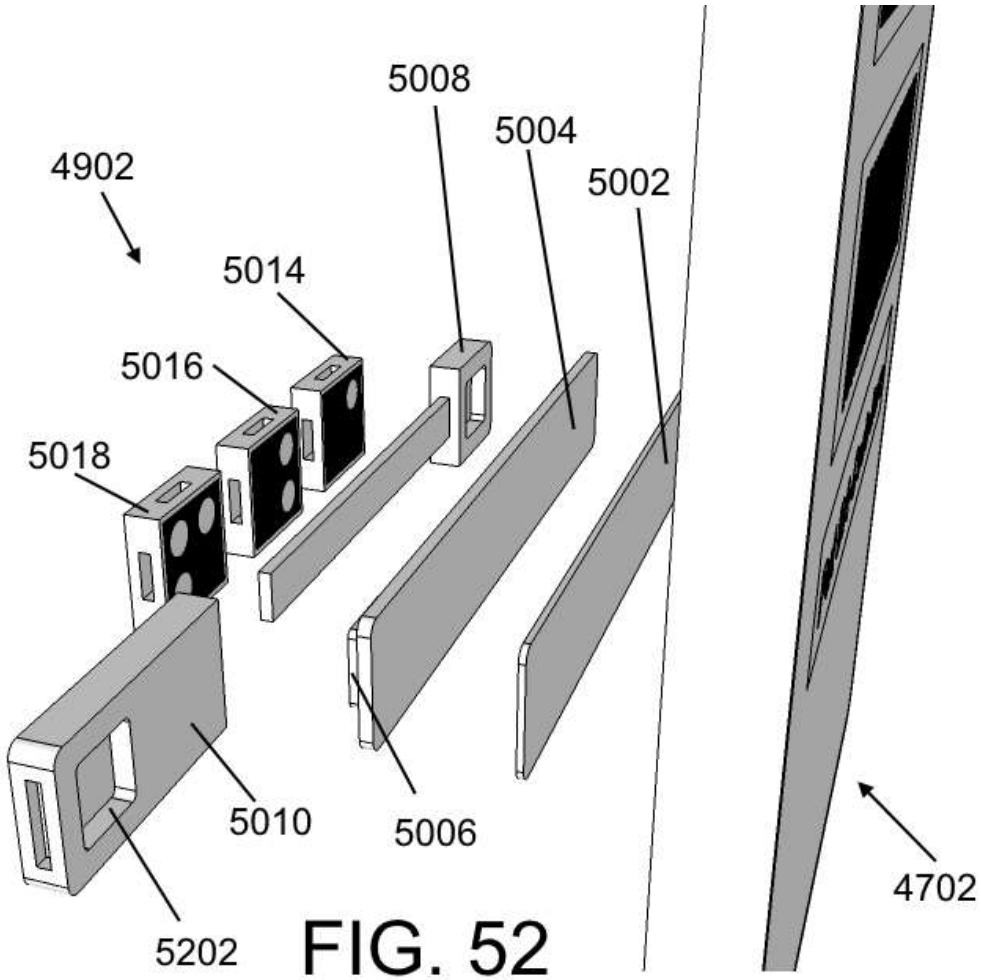
5008
5004
4902
5002
5014
5016
5018
5010
5006
4702
5202

FIG. 52

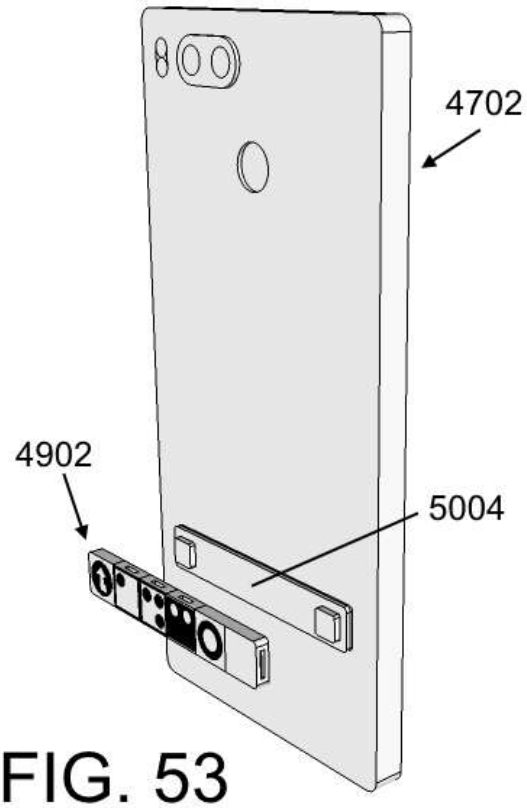
4702
4902
5004

FIG. 53

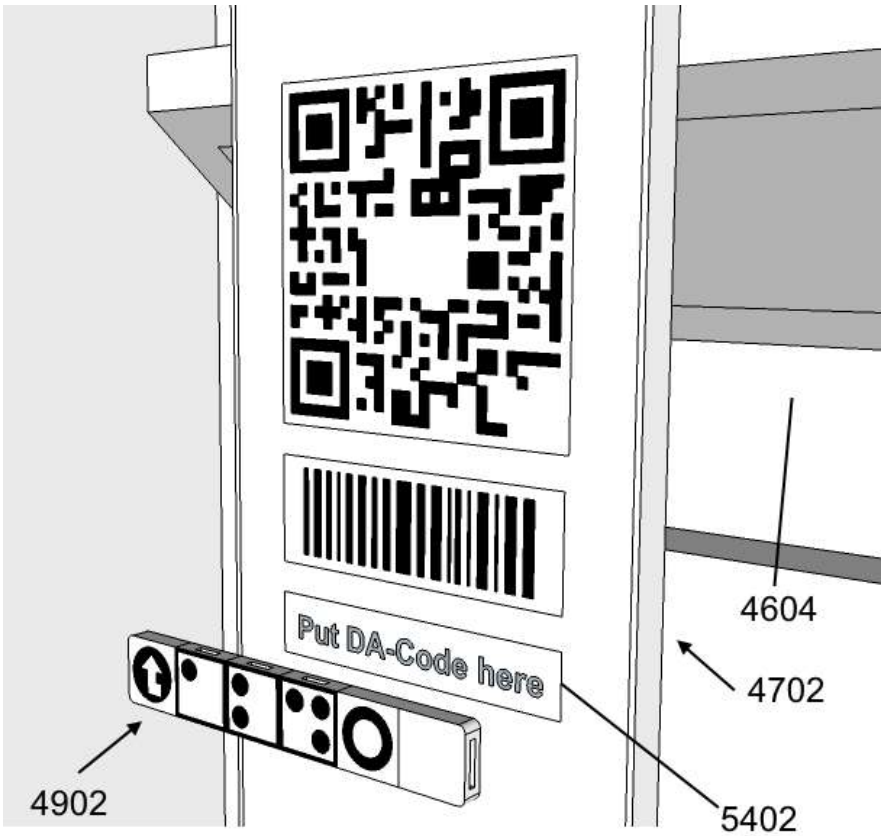

FIG. 54

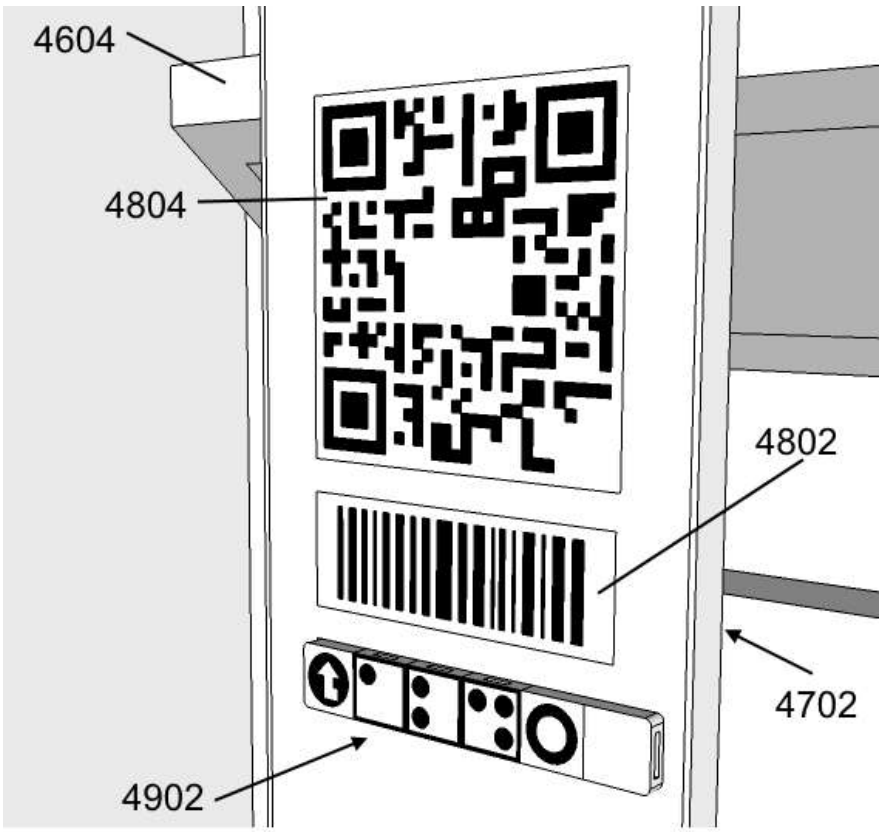

FIG. 55

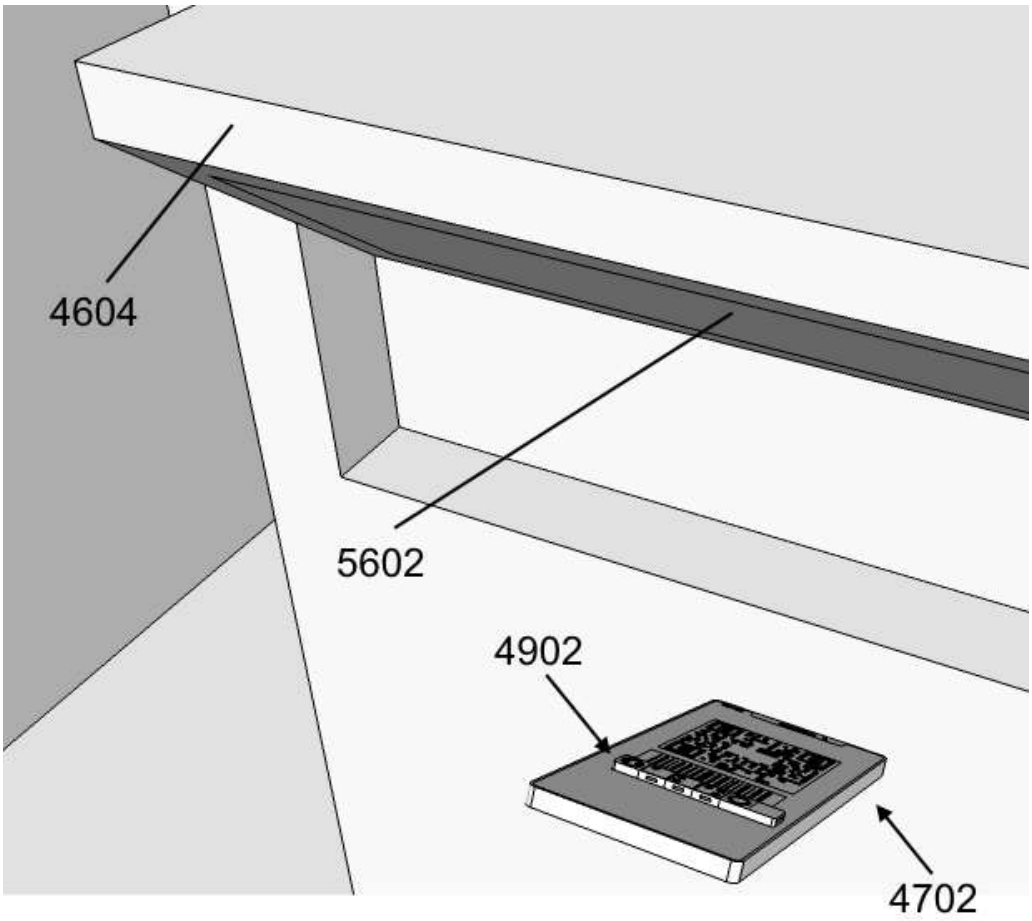
4604
5602
4902
4702

FIG. 56

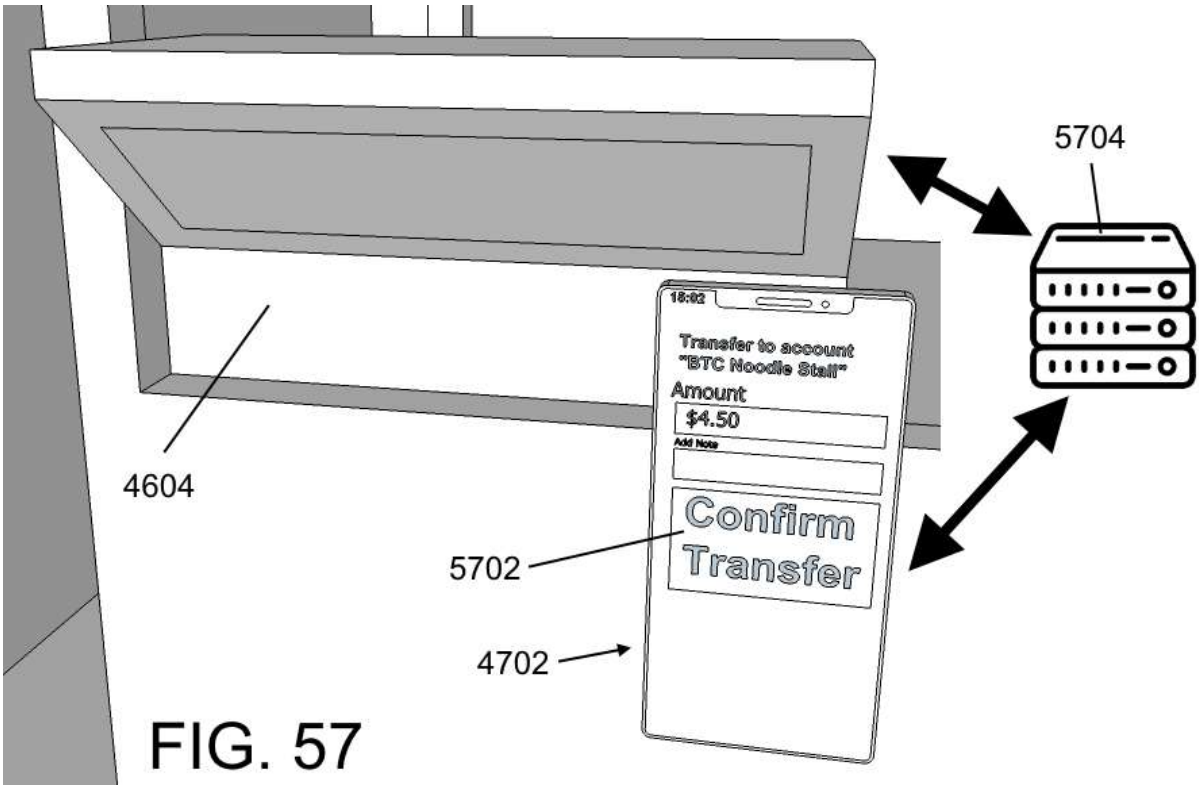
5704
4604
Transfer to account
"BTC Noodle Stall"
Amount
$4.50
Add Note
Confirm
Transfer
5702
4702

FIG. 57

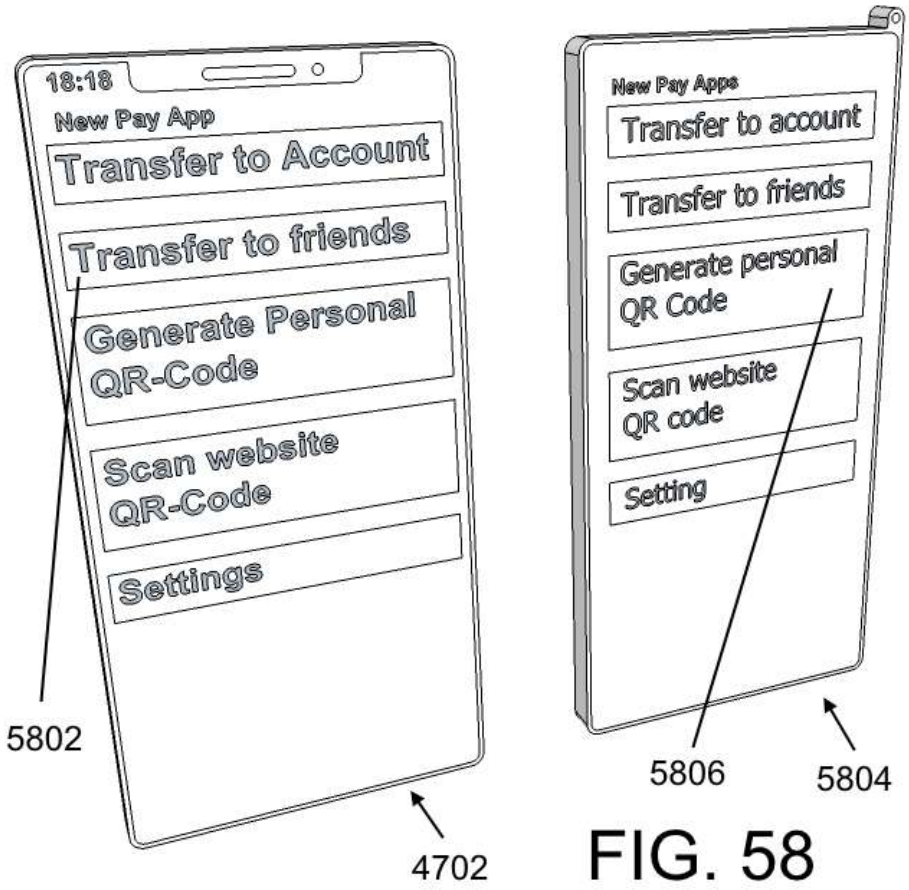
18:18
New Pay App
Transfer to Account
Transfer to friends
Generate Personal QR-Code
Scan website QR-Code
Settings
New Pay Apps
Transfer to account
Transfer to friends
Generate personal QR Code
Scan website QR code
Setting
5802
5806
5804
4702

FIG. 58

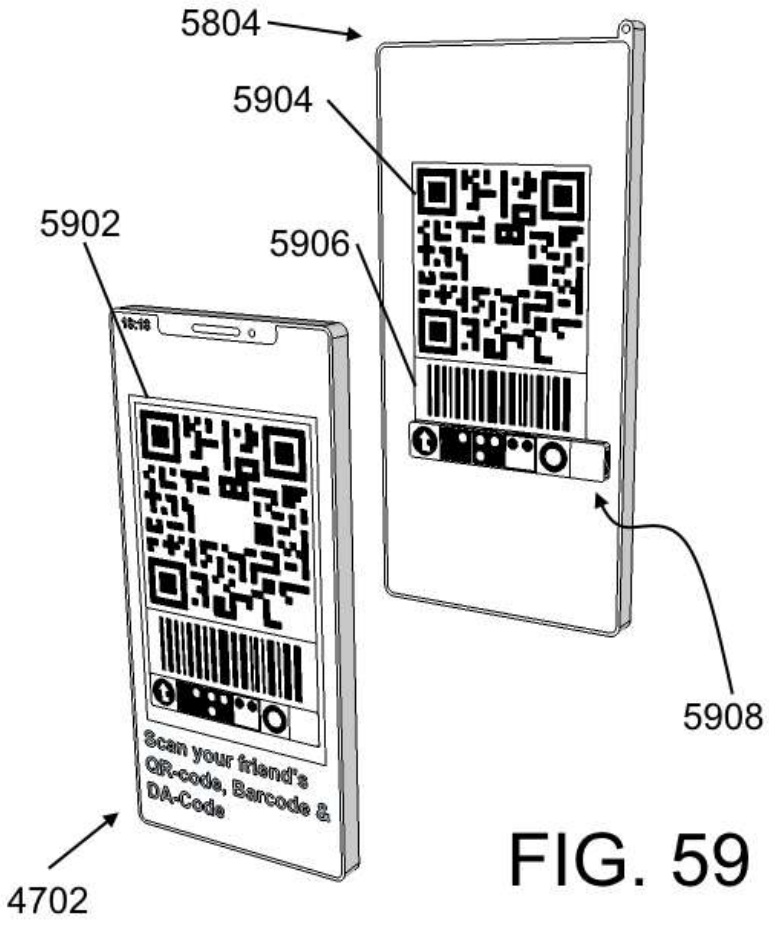
5804
5904
5902
5906
5908
Scan your friend's QR-code, Barcode & DA-Code
4702

FIG. 59

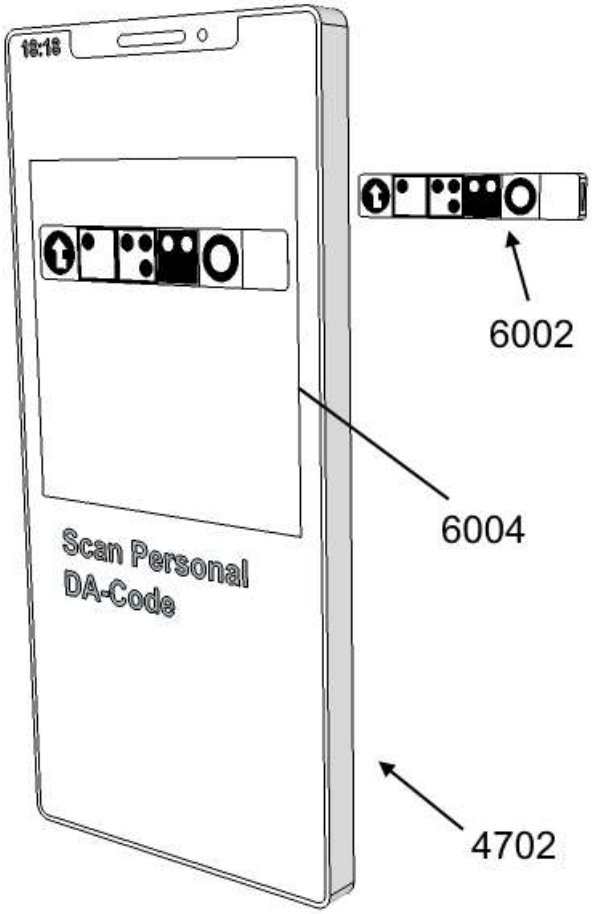
18:18
6002
6004
Scan Personal
DA-Code
4702

FIG. 60

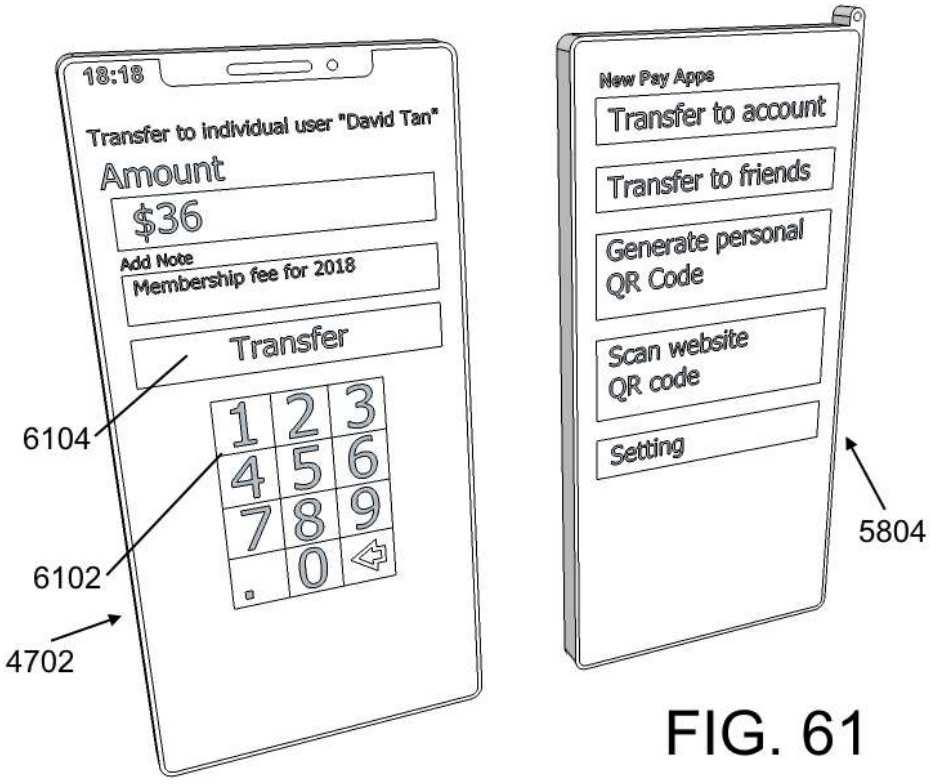
18:18
Transfer to individual user "David Tan"
Amount
$36
Add Note
Membership fee for 2018
Transfer
1 2 3
4 5 6
7 8 9
. 0
6104
6102
4702
New Psy Apps
Transfer to account
Transfer to friends
Generate personal
QR Code
Scan website
QR code
Setting
5804

FIG. 61

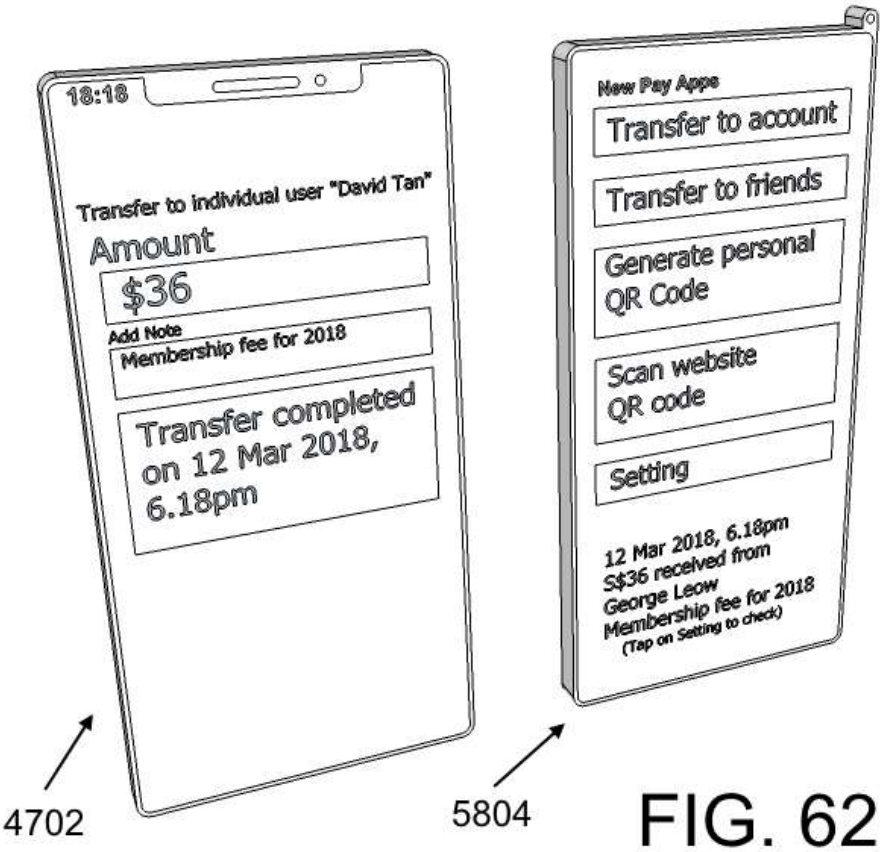
18:18
Transfer to individual user "David Tan"
Amount
$36
Add Note
Membership fee for 2018
Transfer completed on 12 Mar 2018, 6.18pm
New Pay Appe
Transfer to account
Transfer to friends
Generate personal QR Code
Scan website QR code
Setting
12 Mar 2018, 6.18pm
S$36 received from
George Leow
Membership fee for 2018
(Tap on Setting to check)
4702
5804

FIG. 62

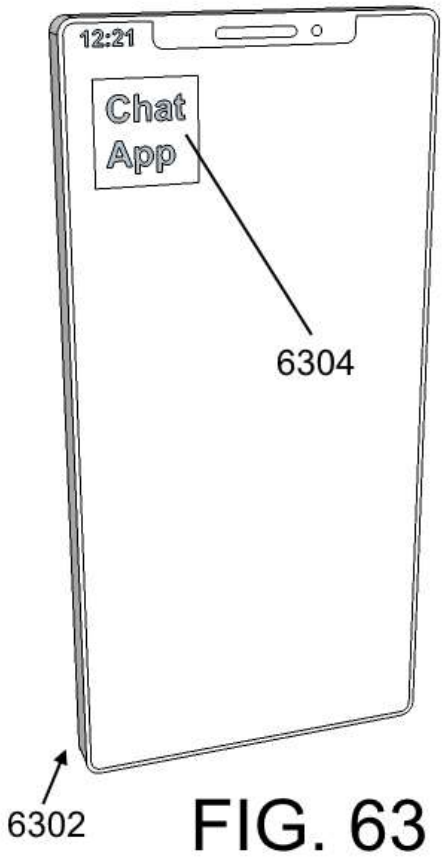
12:21
Chat App
6304
6302

FIG. 63

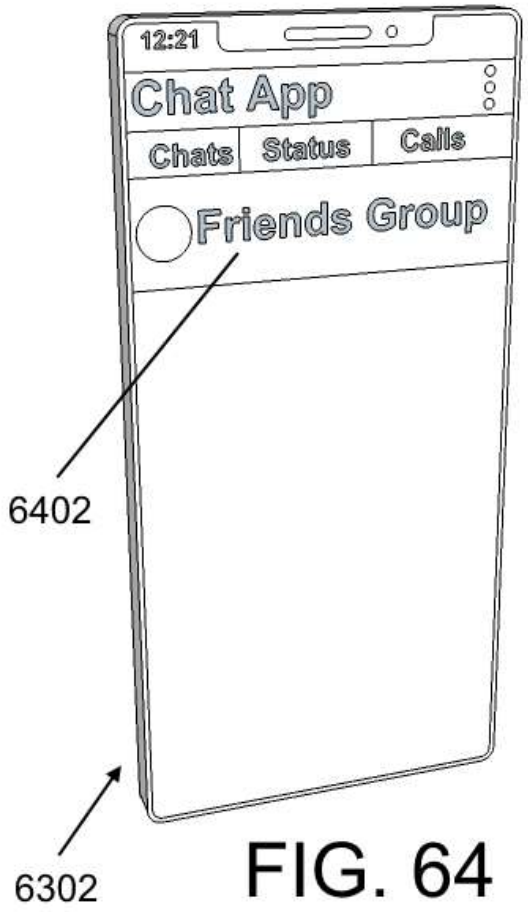
12:21
Chat App
Chats
Status
Calls
Friends Group
6402
6302

FIG. 64

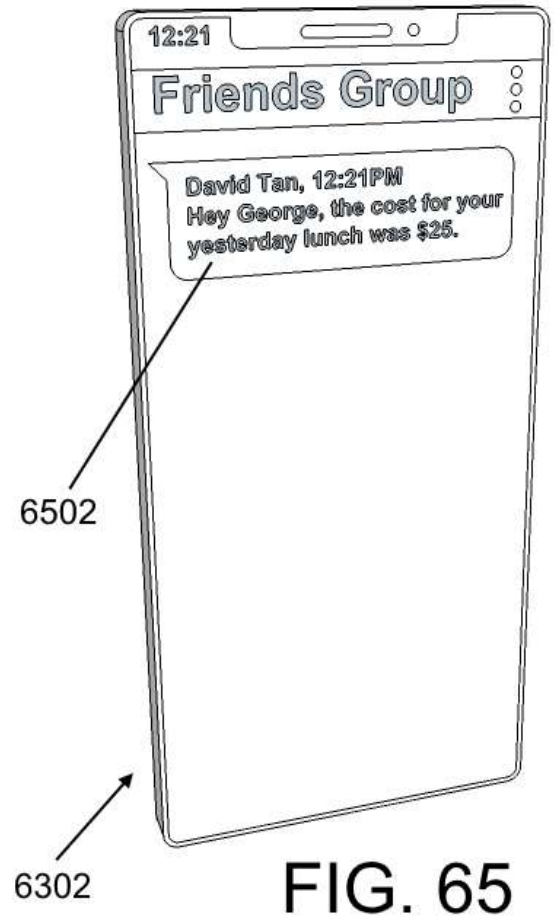
12:21
Friends Group
David Tan, 12:21PM
Hey George, the cost for your yesterday lunch was $25.
6502
6302

FIG. 65

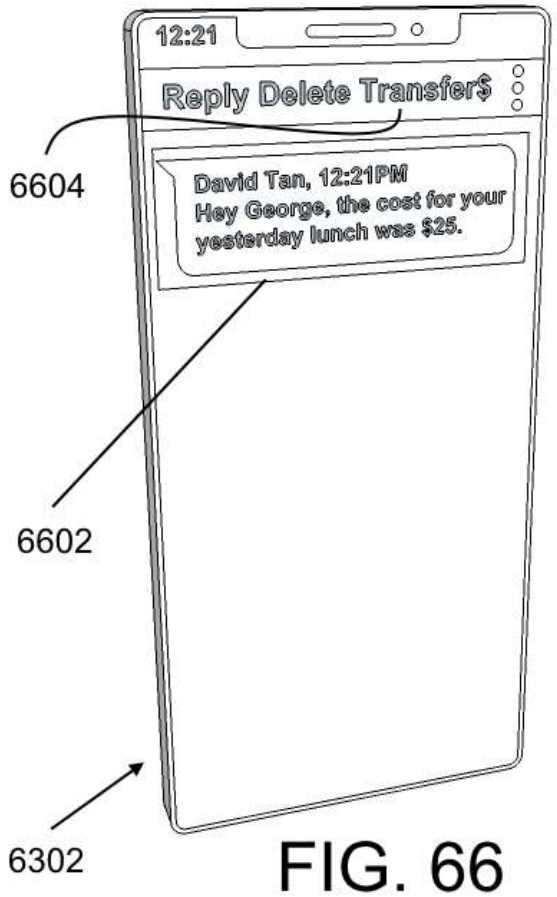
12:21
Reply Delete Transfer$
David Tan, 12:21PM
Hey George, the cost for your yesterday lunch was $25.
6604
6602
6302

FIG. 66

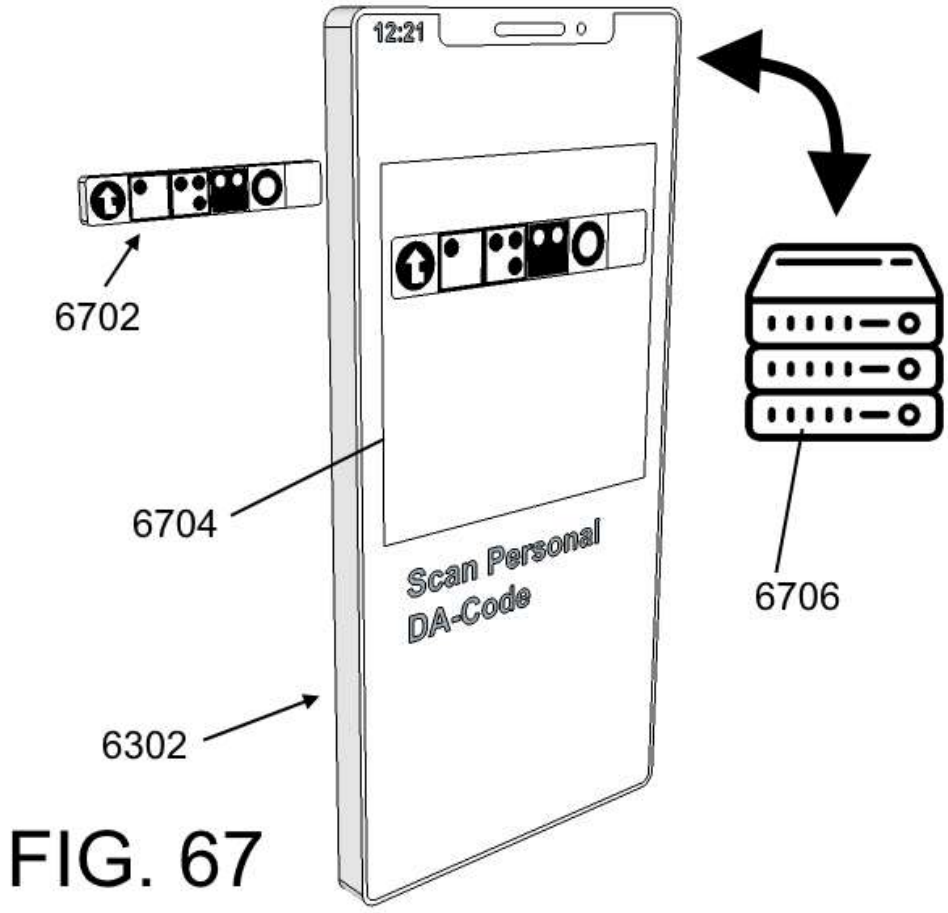
12:21
6702
6704
Scan Personal DA-Code
6706
6302

FIG. 67

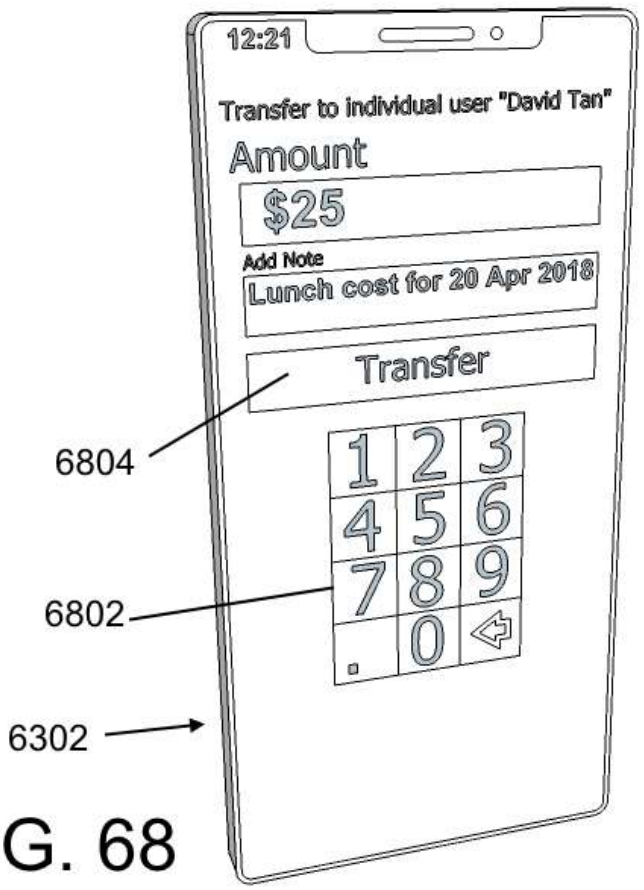
12:21
Transfer to individual user "David Tan"
Amount
$25
Add Note
Lunch cost for 20 Apr 2018
Transfer
1 2 3
4 5 6
7 8 9
. 0
6804
6802
6302

FIG. 68

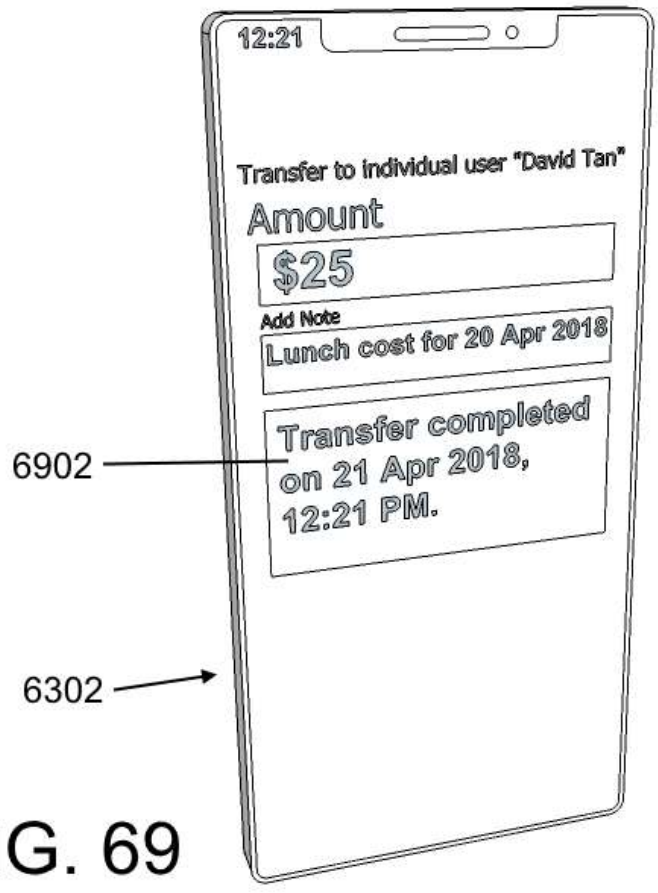
12:21
Transfer to individual user "David Tan"
Amount
$25
Add Note
Lunch cost for 20 Apr 2018
Transfer completed on 21 Apr 2018, 12:21 PM.
6902
6302

FIG. 69

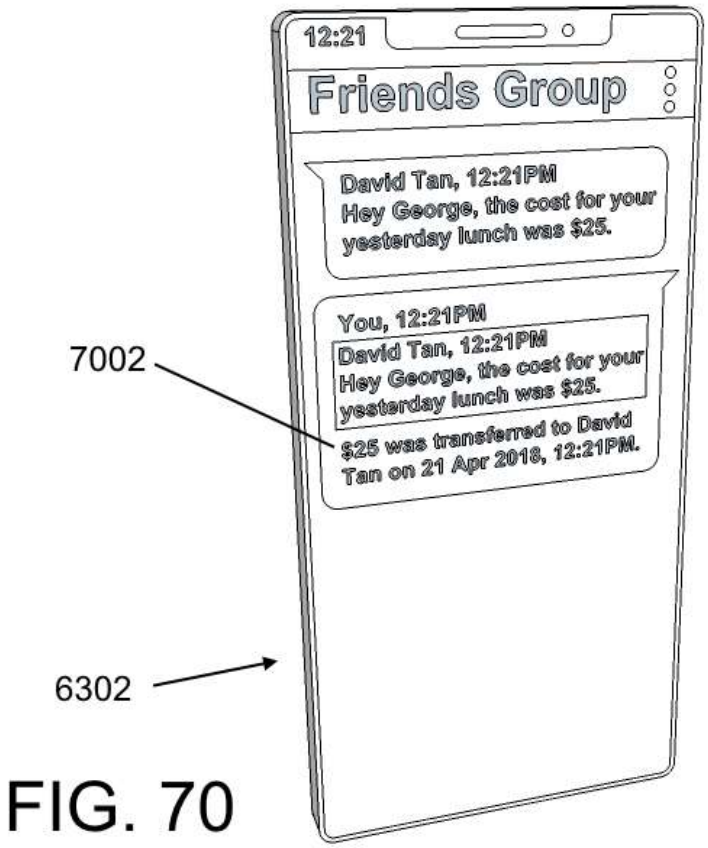
12:21
Friends Group
David Tan, 12:21PM
Hey George, the cost for your yesterday lunch was $25.
You, 12:21PM
David Tan, 12:21PM
Hey George, the cost for your yesterday lunch was $25.
$25 was transferred to David Tan on 21 Apr 2018, 12:21PM.
7002
6302

FIG. 70

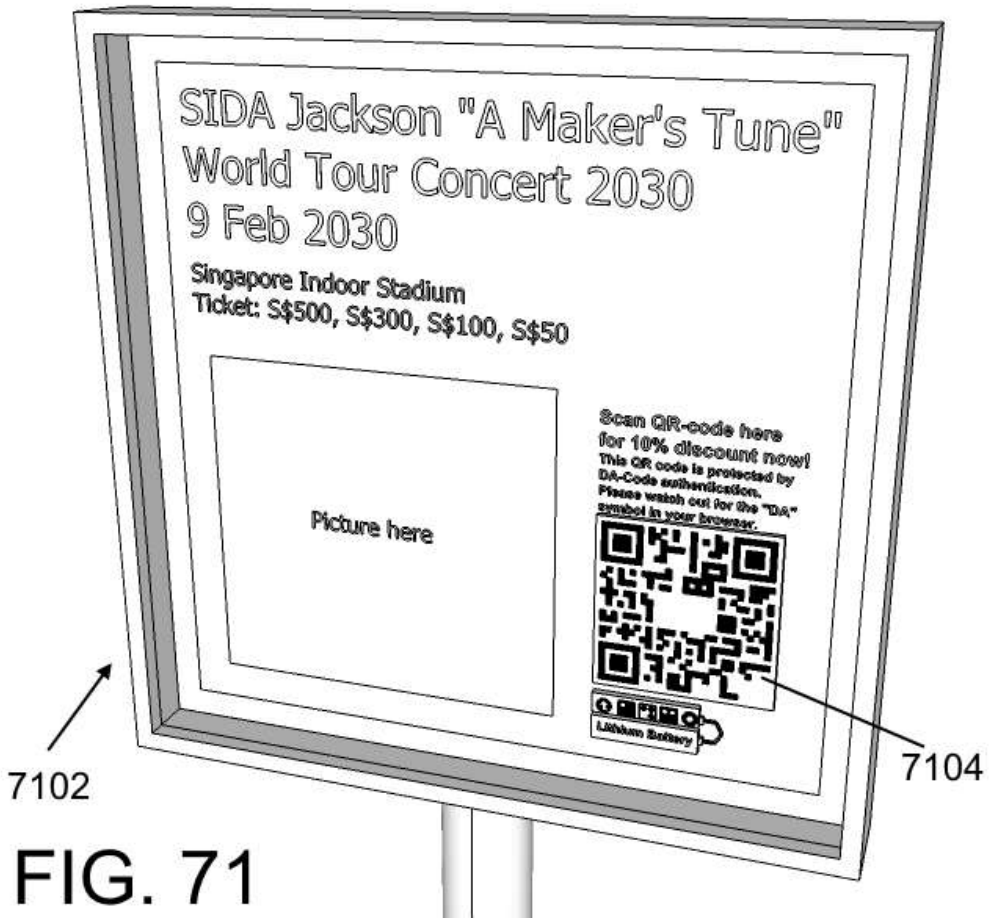
SIDA Jackson "A Maker's Tune"
World Tour Concert 2030
9 Feb 2030
Singapore Indoor Stadium
Ticket: S$500, S$300, S$100, S$50
Picture here
Scan QR-code here for 10% discount now!
This QR code is protected by DA-Code authentication.
Please watch out for the "DA" symbol in your browser.
Lithium Battery
7102
7104

FIG. 71

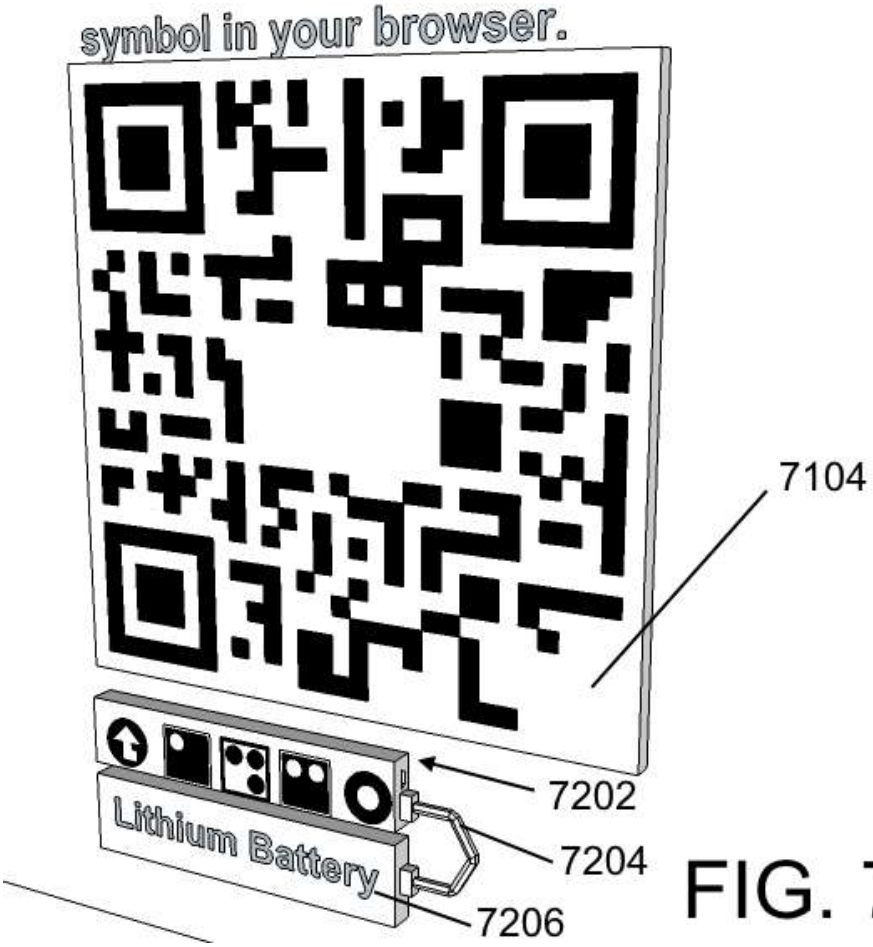
symbol in your browser.
7104
7202
Lithium Battery
7204
7206

FIG. 72

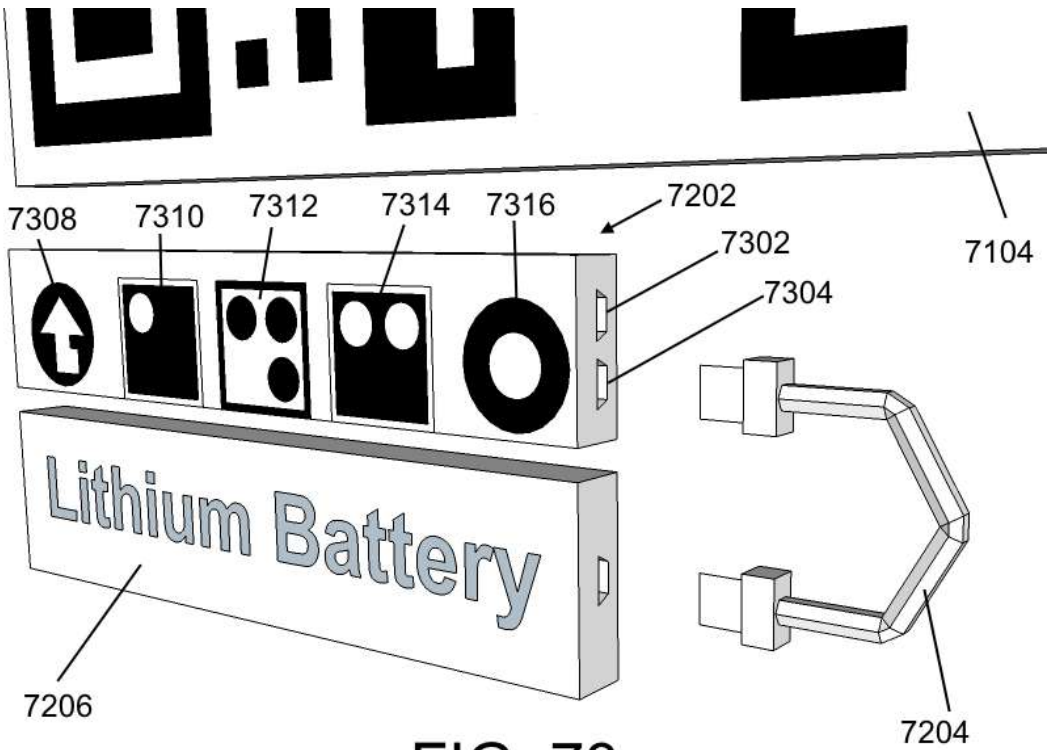
7308
7310
7312
7314
7316
7202
7302
7304
7104
Lithium Battery
7206
7204

FIG. 73

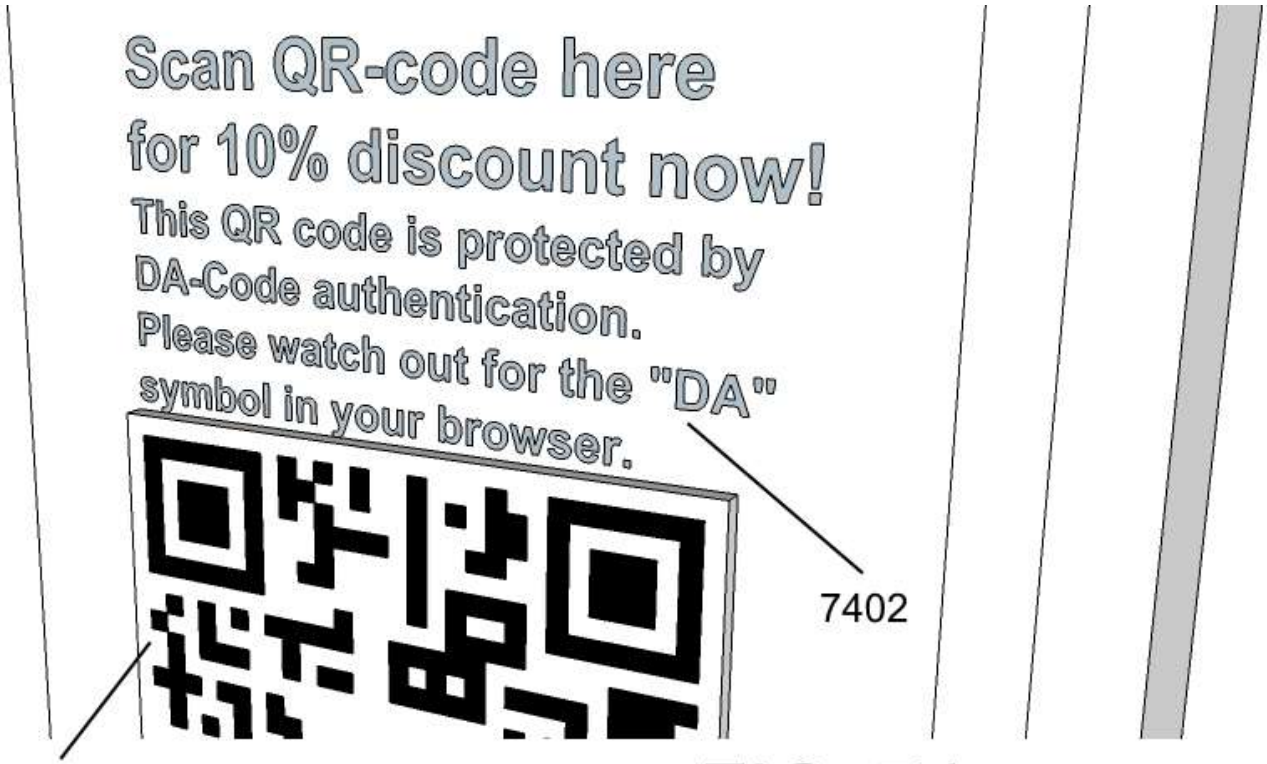
Scan QR-code here
for 10% discount now!
This QR code is protected by
DA-Code authentication.
Please watch out for the "DA"
symbol in your browser.
7402
7104

FIG. 74

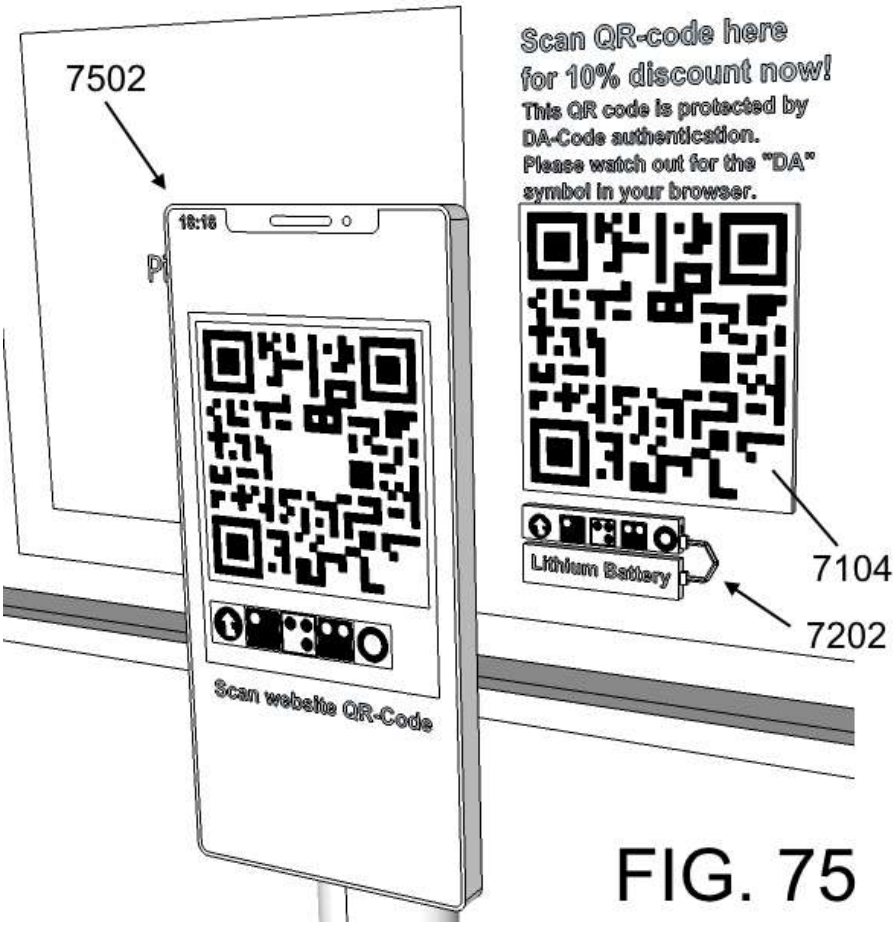
7502
Scan QR-code here
for 10% discount now!
This QR code is protected by
DA-Code authentication.
Please watch out for the "DA"
symbol in your browser.
Lithium Battery
7104
7202
Scan website QR-Code

FIG. 75

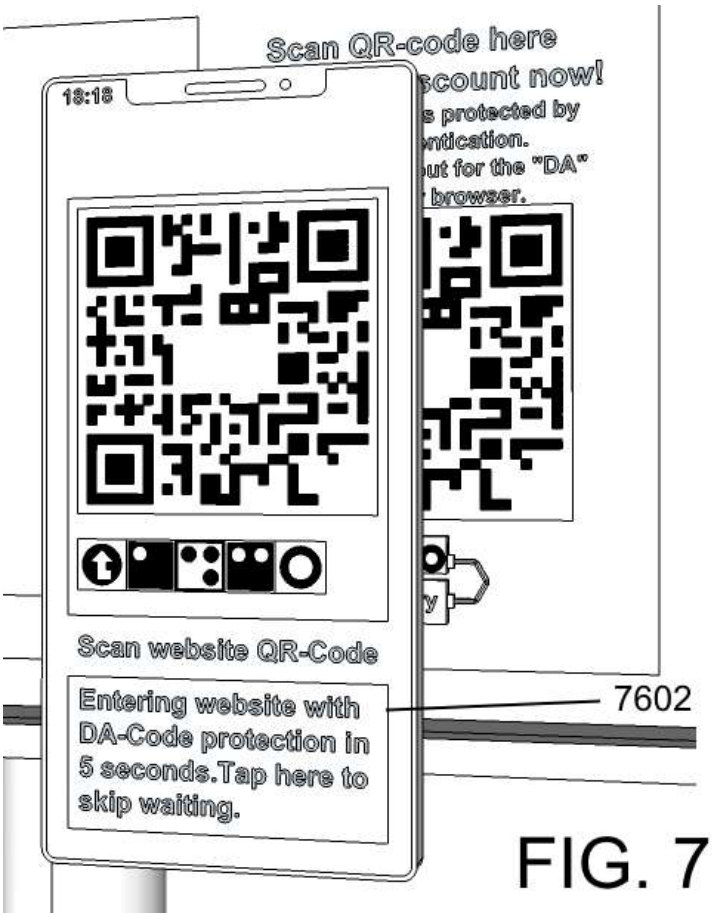
Scan QR-code here
18:18
Scan website QR-Code
Entering website with DA-Code protection in 5 seconds.Tap here to skip waiting.
7602

FIG. 76

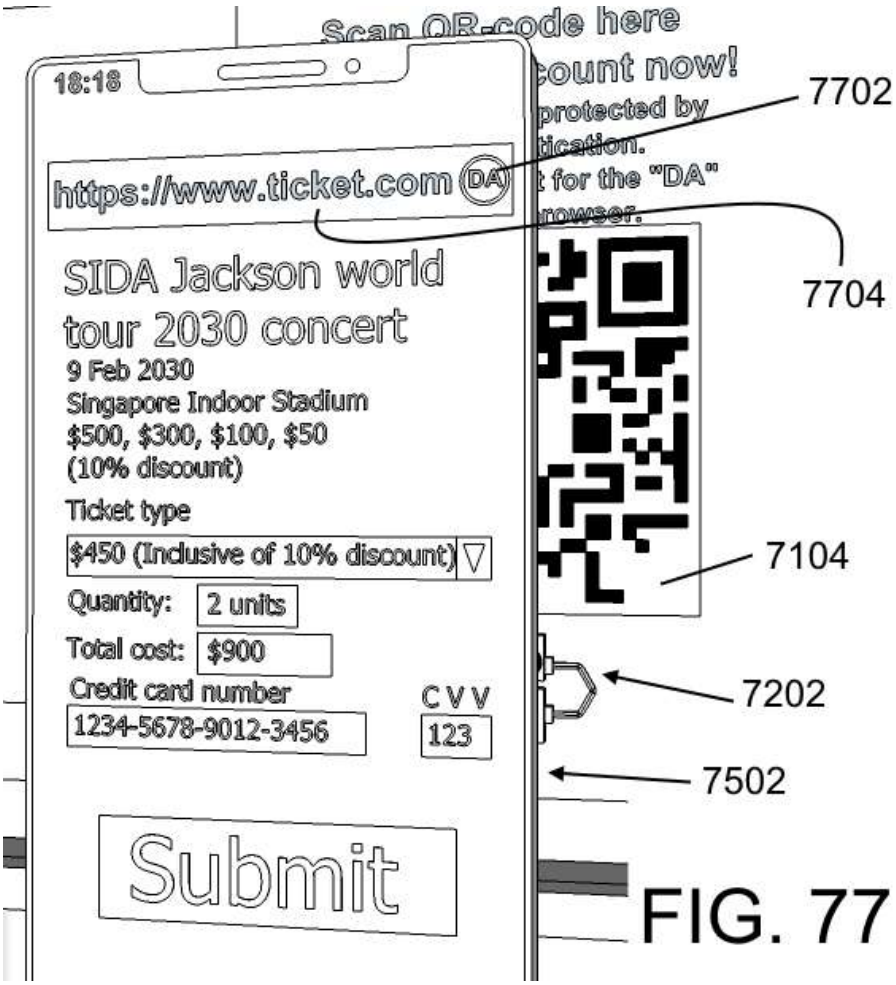
18:18
https://www.ticket.com
DA
7702
7704
SIDA Jackson world tour 2030 concert
9 Feb 2030
Singapore Indoor Stadium
$500, $300, $100, $50
(10% discount)
Ticket type
$450 (Inclusive of 10% discount)
Quantity: 2 units
Total cost: $900
Credit card number
1234-5678-9012-3456
CVV
123
Submit
7104
7202
7502

FIG. 77

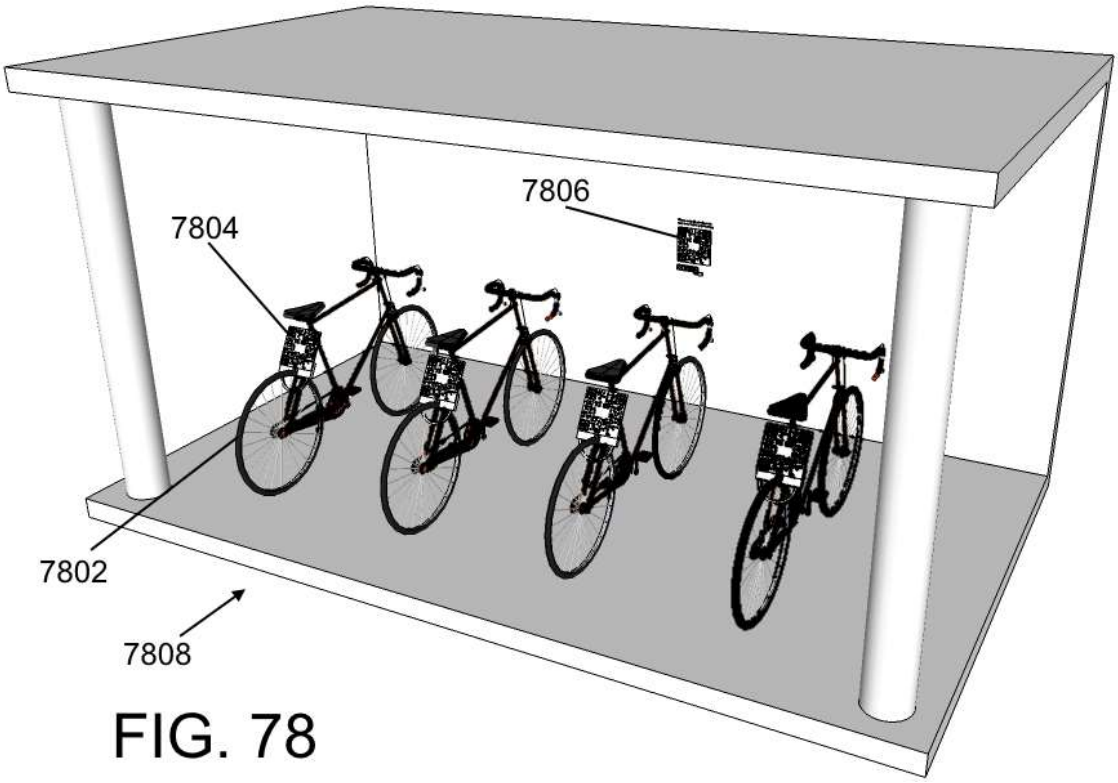
7806
7804
7802
7808

FIG. 78

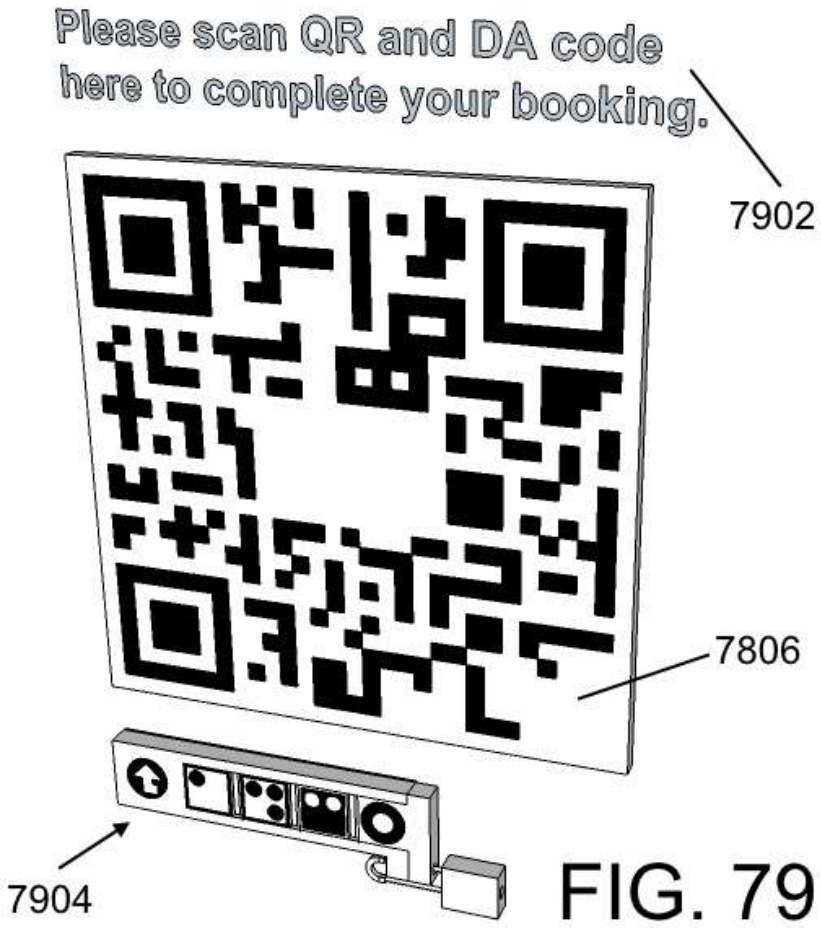
Please scan QR and DA code
here to complete your booking.
7902
7806
7904

FIG. 79

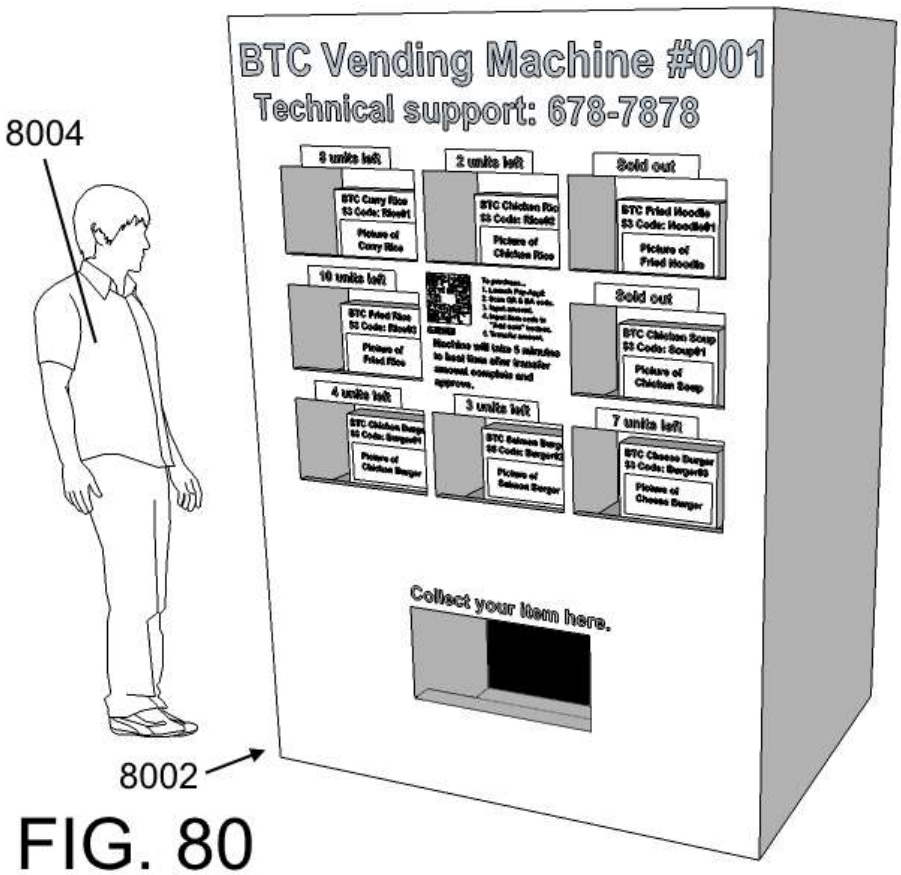
8004
BTC Vending Machine #001
Technical support: 678-7878
Collect your item here.
8002

FIG. 80

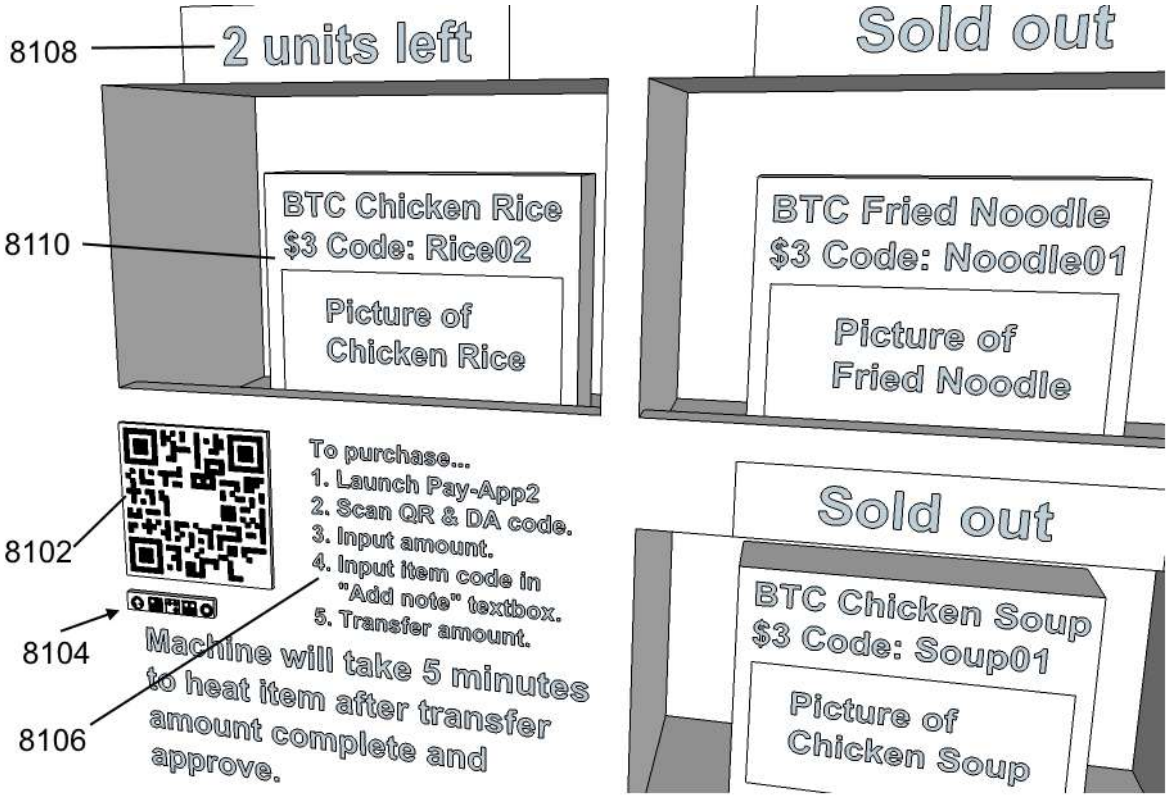
8108
2 units left
Sold out
8110
BTC Chicken Rice
$3 Code: Rice02
Picture of
Chicken Rice
BTC Fried Noodle
$3 Code: Noodle01
Picture of
Fried Noodle
8102
To purchase...
1. Launch Pay-App2
2. Scan QR & DA code.
3. Input amount.
4. Input item code in
"Add note" textbox.
5. Transfer amount.
8104
Machine will take 5 minutes
to heat item after transfer
amount complete and
approve.
8106
Sold out
BTC Chicken Soup
$3 Code: Soup01
Picture of
Chicken Soup

FIG. 81

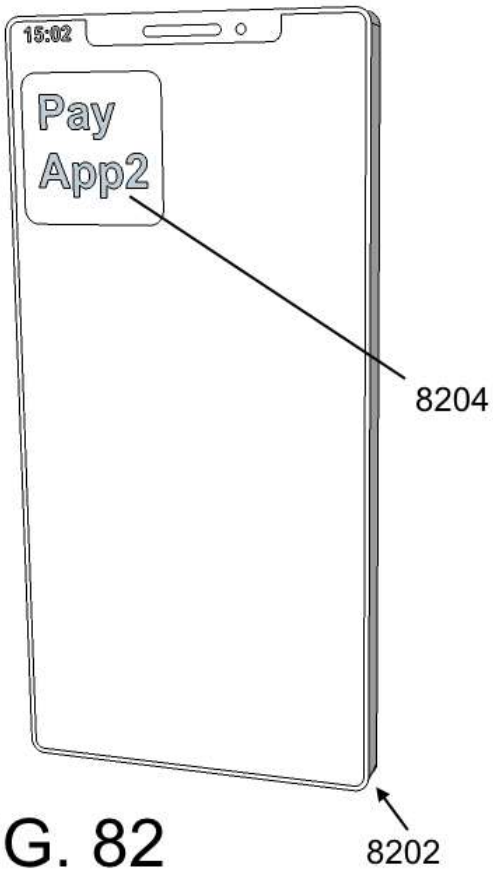
15:02
Pay App2
8204
8202

FIG. 82

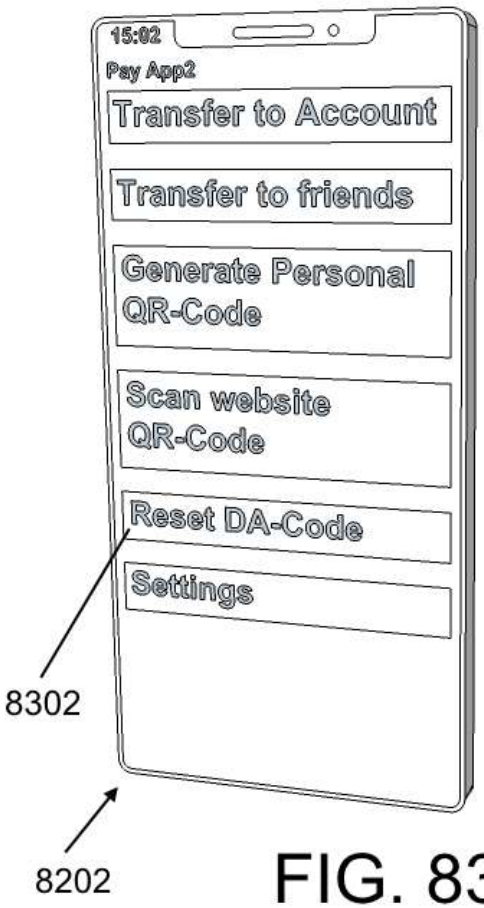
15:02
Pay App2
Transfer to Account
Transfer to friends
Generate Personal QR-Code
Scan website QR-Code
Reset DA-Code
Settings
8302
8202

FIG. 83

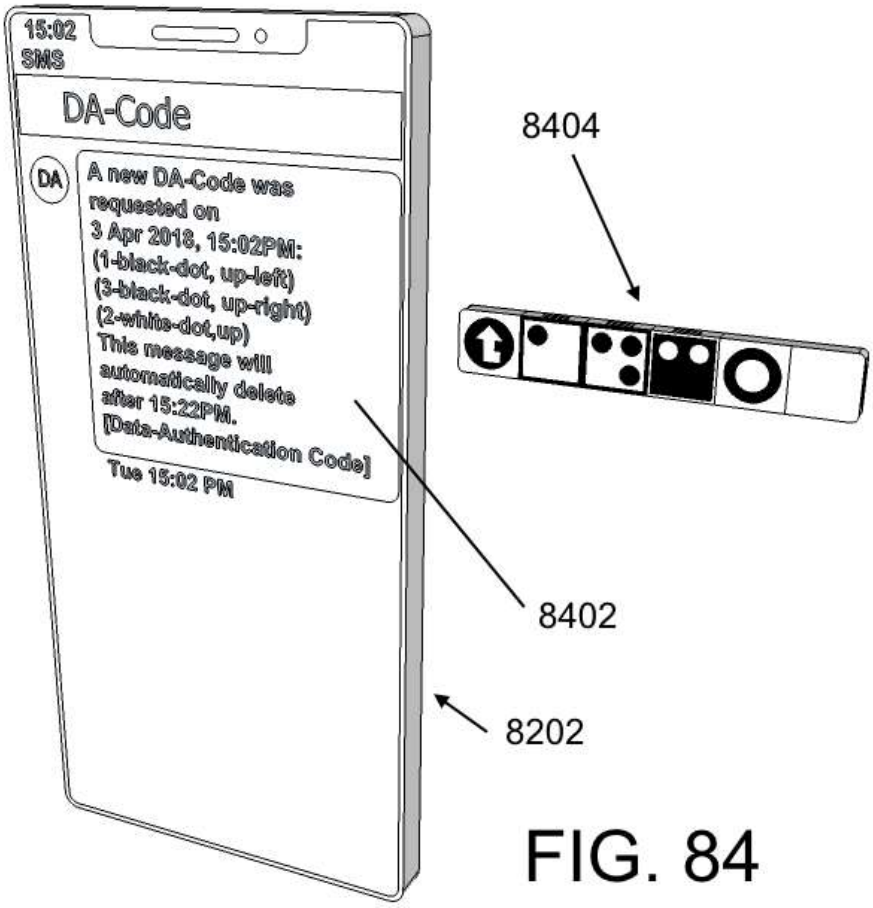
15:02
SMS
DA-Code
DA
A new DA-Code was requested on
3 Apr 2018, 15:02PM:
(1-black-dot, up-left)
(3-black-dot, up-right)
(2-white-dot,up)
This message will automatically delete after 15:22PM.
[Data-Authentication Code]
Tue 15:02 PM
8404
8402
8202

FIG. 84

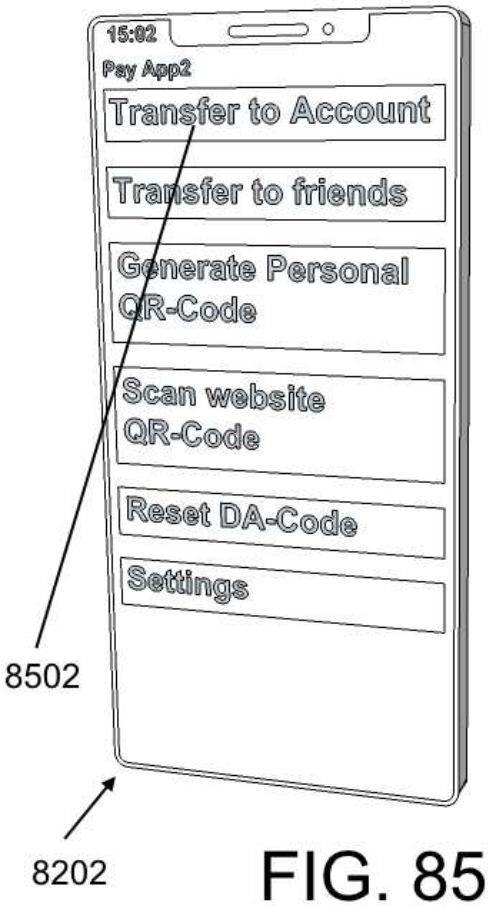
15:02
Psy App2
Transfer to Account
Transfer to friends
Generate Personal QR-Code
Scan website QR-Code
Reset DA-Code
Settings
8502
8202

FIG. 85

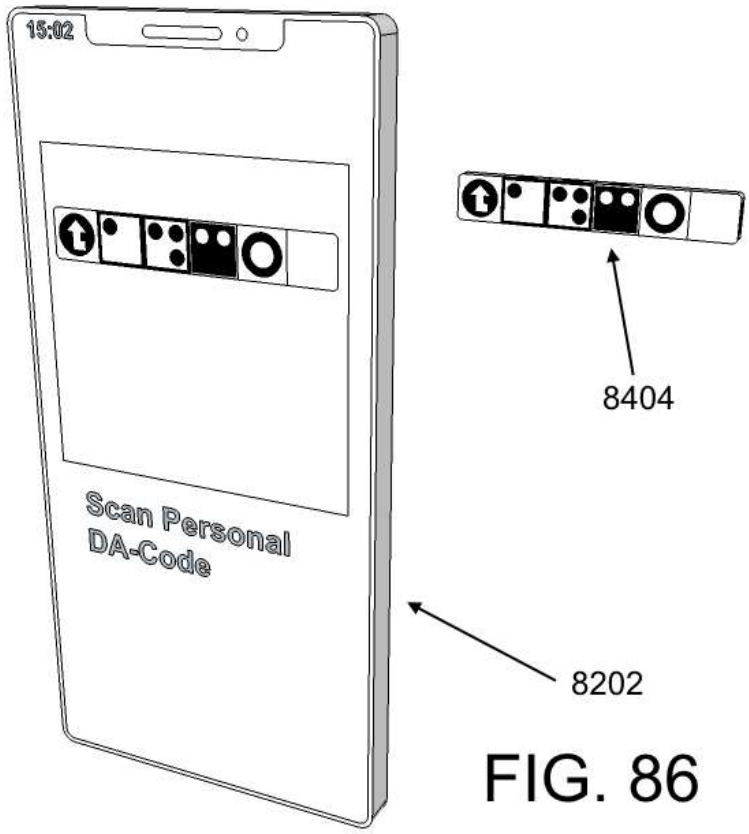
15:02
Scan Personal
DA-Code
8404
8202

FIG. 86

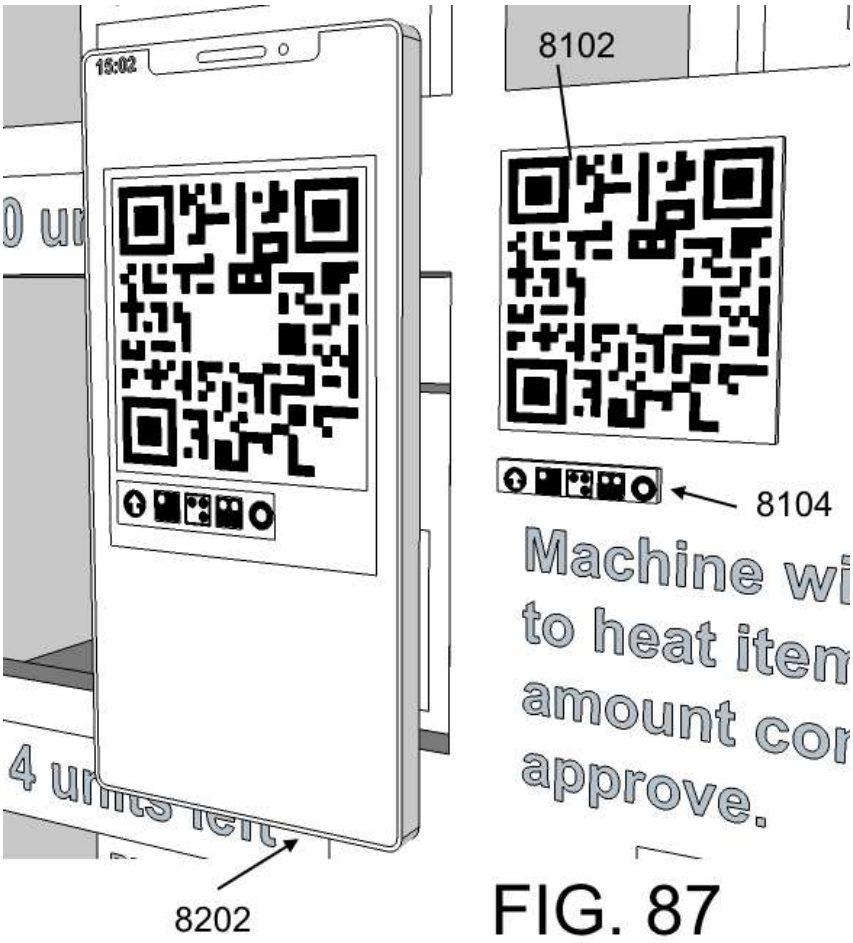
15:02
8102
8104
Machine wi
to heat iten
amount cor
approve.
8202

FIG. 87

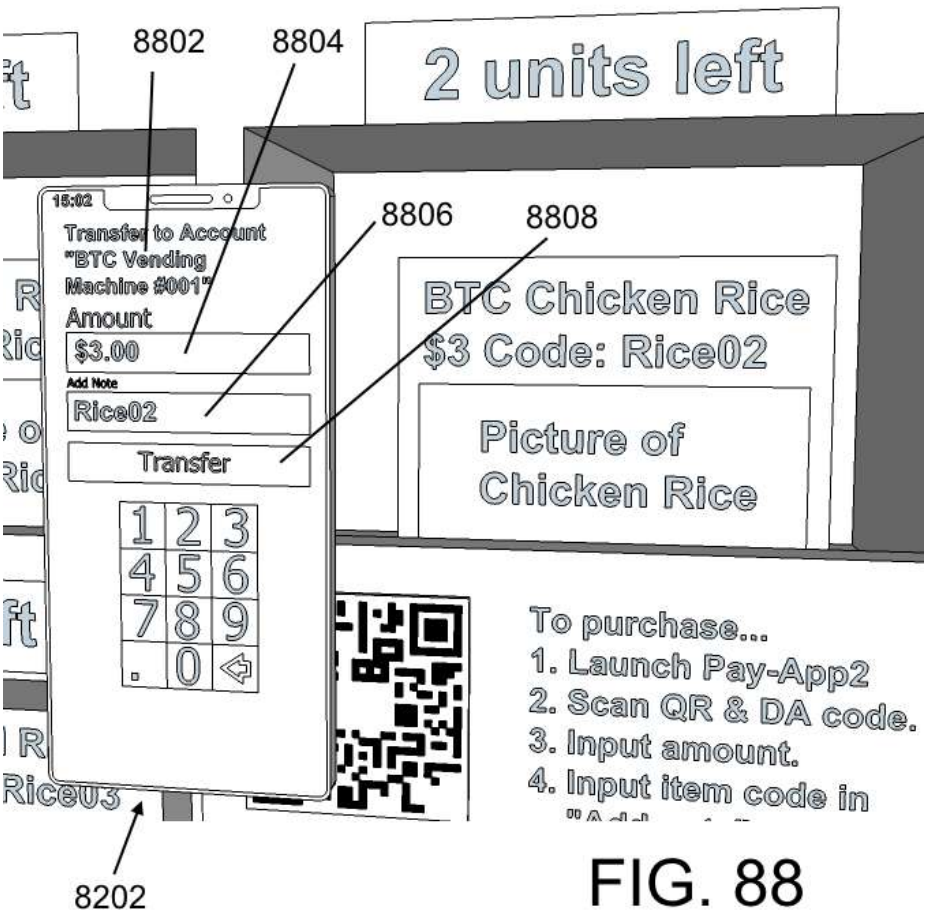
8802
8804
2 units left
15:02
Transfer to Account "BTC Vending Machine #001"
Amount
$3.00
Add Note
Rice02
Transfer
8806
8808
BTC Chicken Rice
$3 Code: Rice02
Picture of Chicken Rice
To purchase...
1. Launch Pay-App2
2. Scan QR & DA code.
3. Input amount.
4. Input item code in
8202

FIG. 88

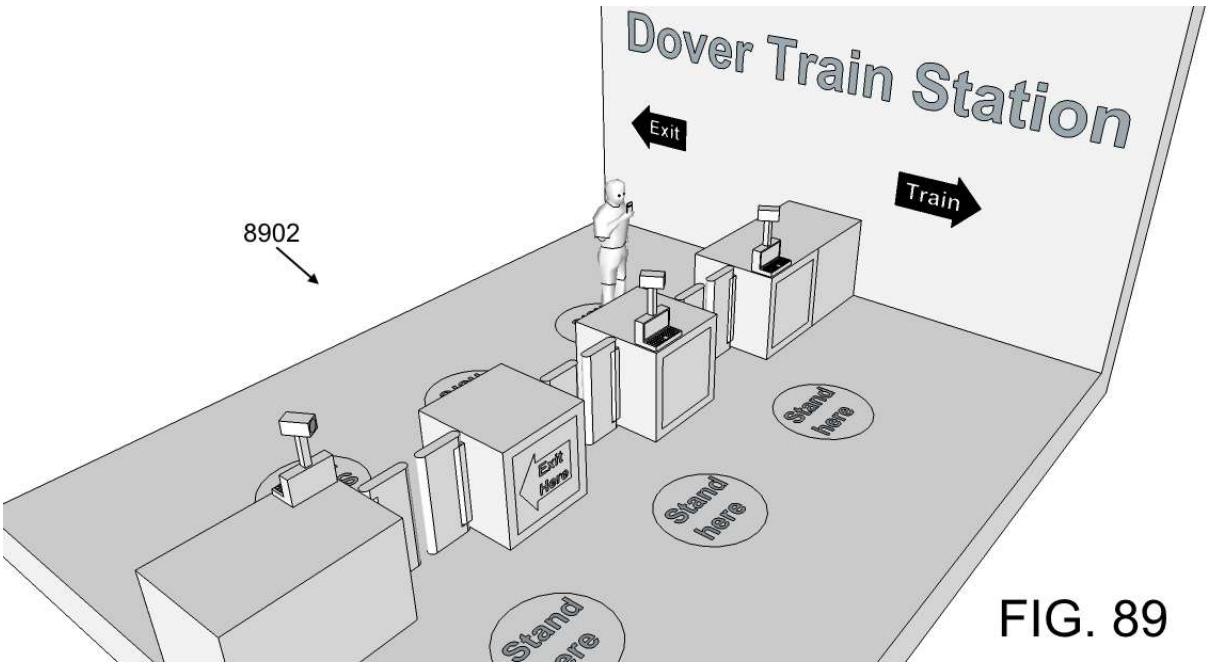
Dover Train Station
Exit
Train
8902
Exit Here
Stand here
Stand here
Stand here

FIG. 89

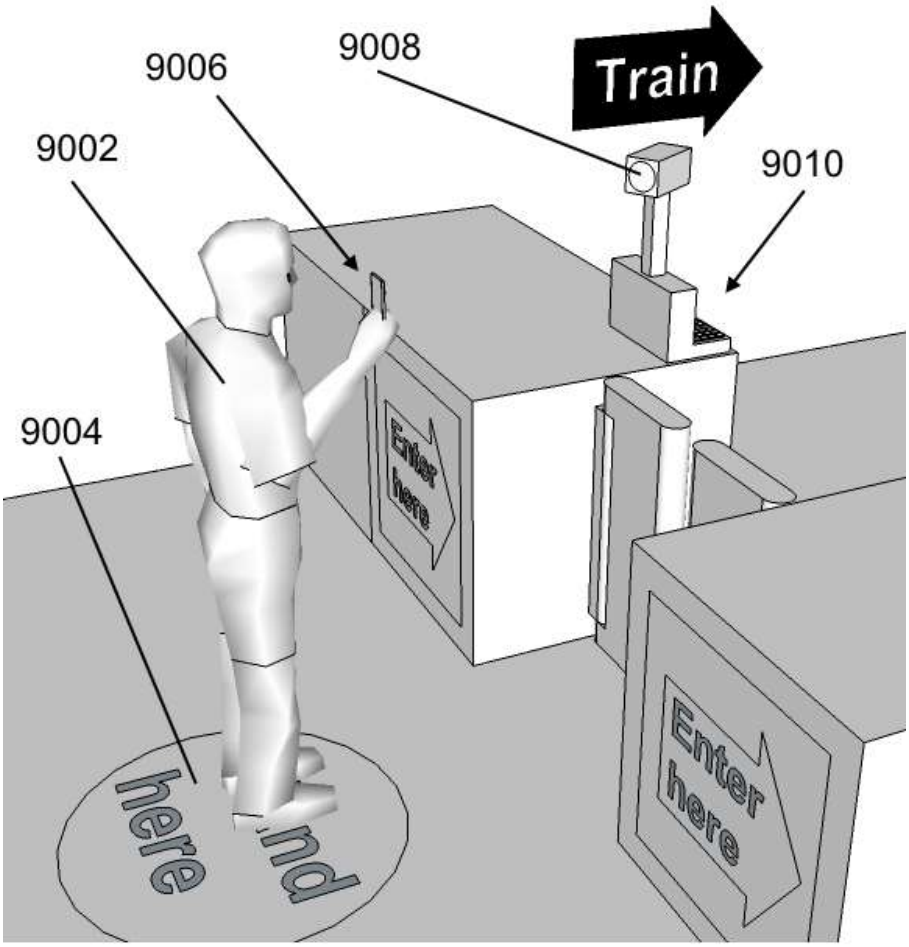
9008
Train
9006
9002
9010
9004
Enter here
Enter here

FIG. 90

FIG. 91

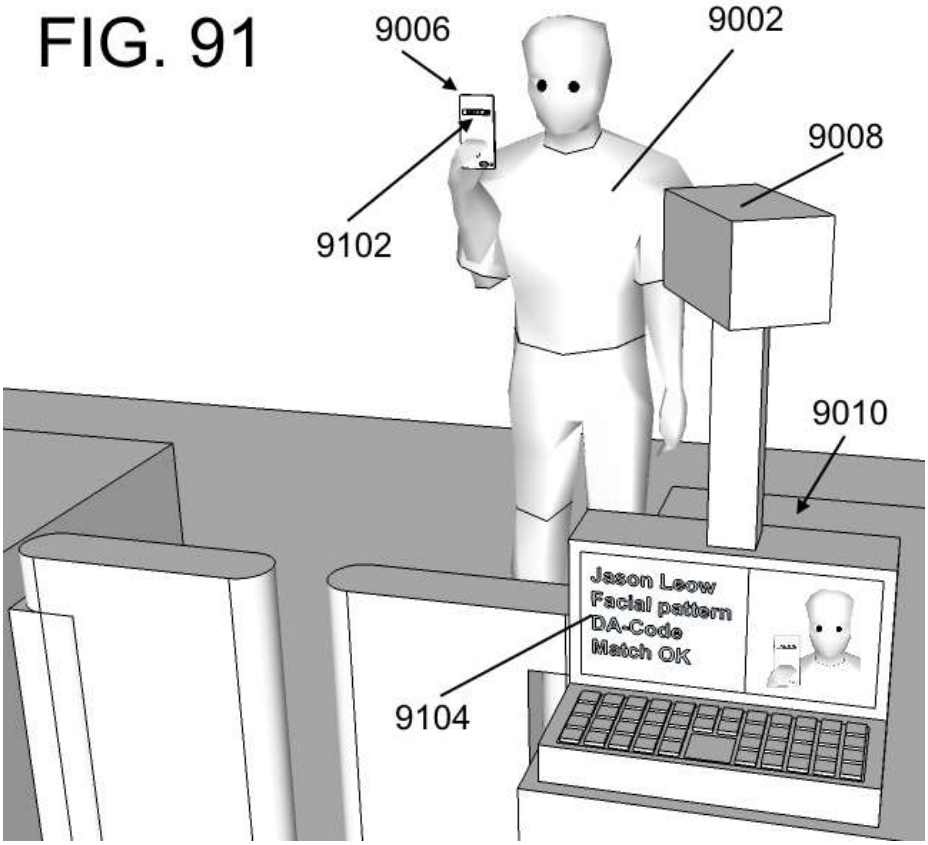
9006
9002
9008
9102
9010
Jason Leow
Facial pattern
DA-Code
Match OK
9104

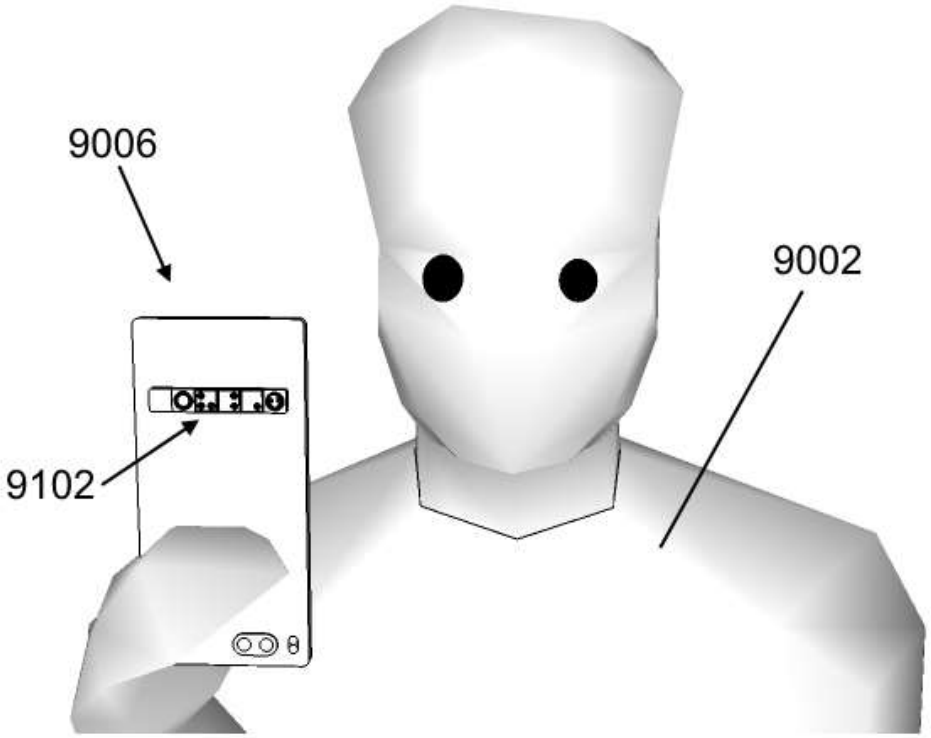

FIG. 92

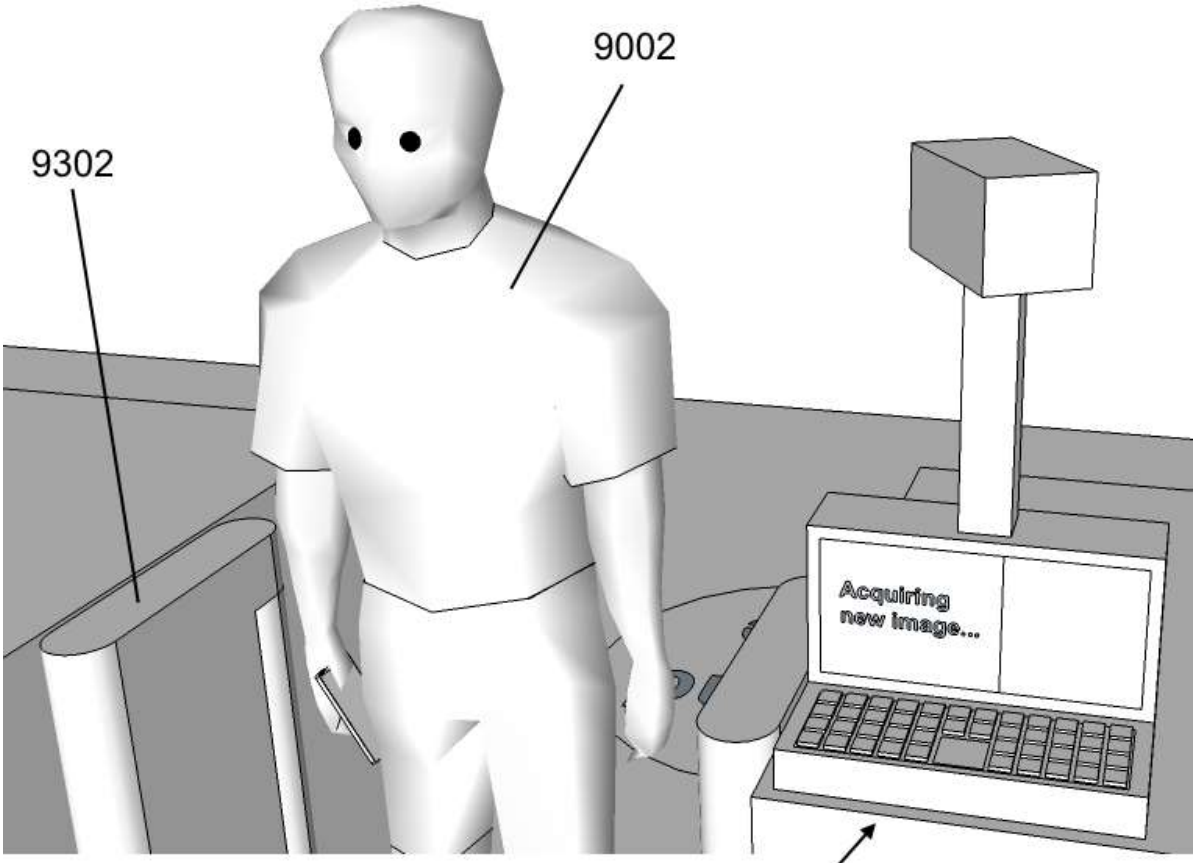

FIG. 93

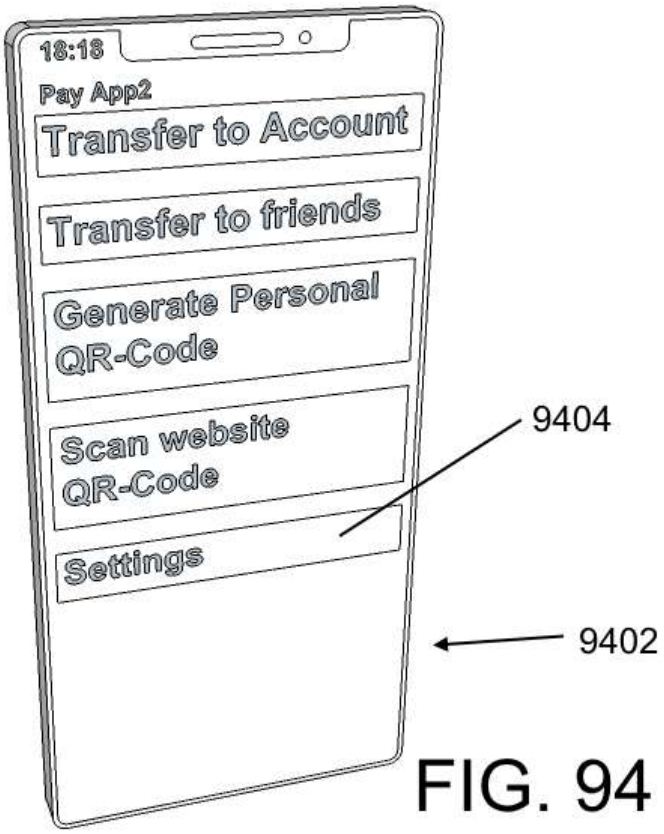
18:18
Pay App2
Transfer to Account
Transfer to friends
Generate Personal QR-Code
Scan website QR-Code
Settings
9404
9402

FIG. 94

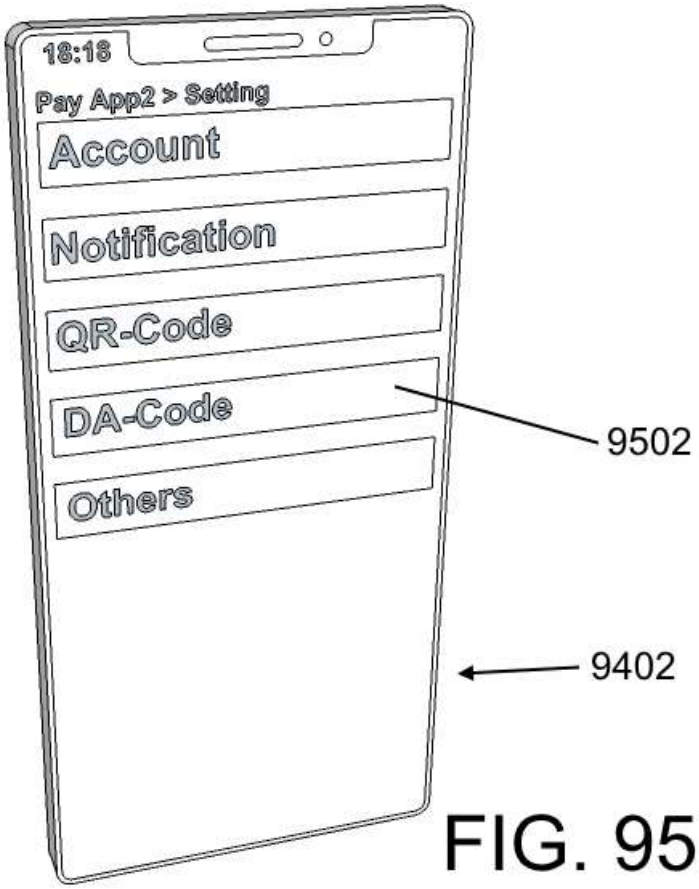
18:18
Pay App2 > Setting
Account
Notification
QR-Code
DA-Code
Others
9502
9402

FIG. 95

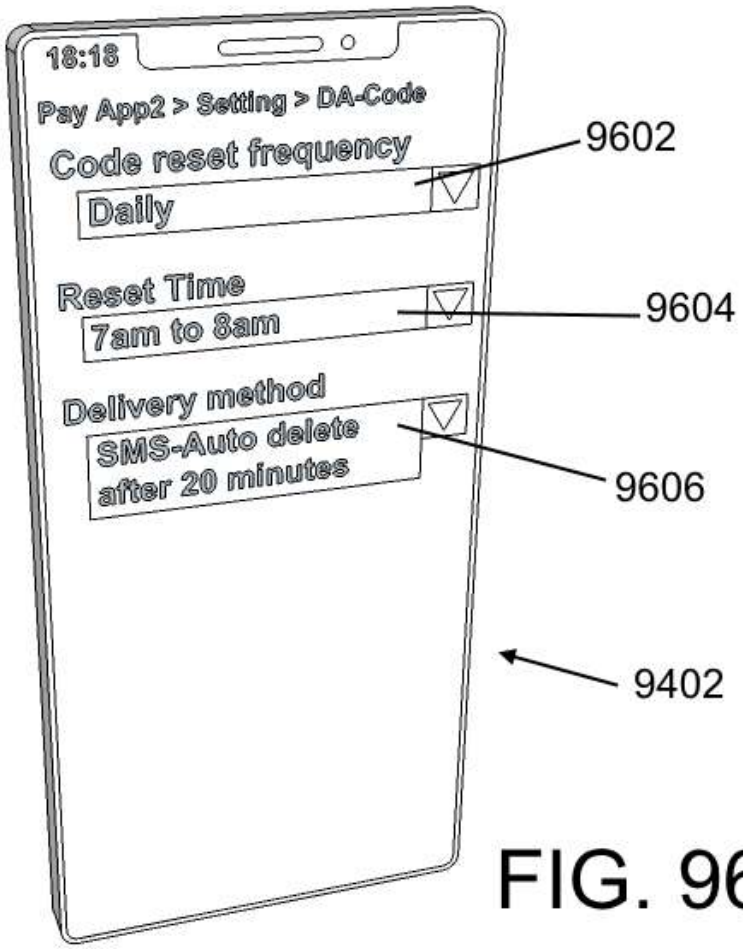
18:18
Pay App2 > Setting > DA-Code
Code reset frequency
Daily
Reset Time
7am to 8am
Delivery method
SMS-Auto delete
after 20 minutes
9602
9604
9606
9402

FIG. 96

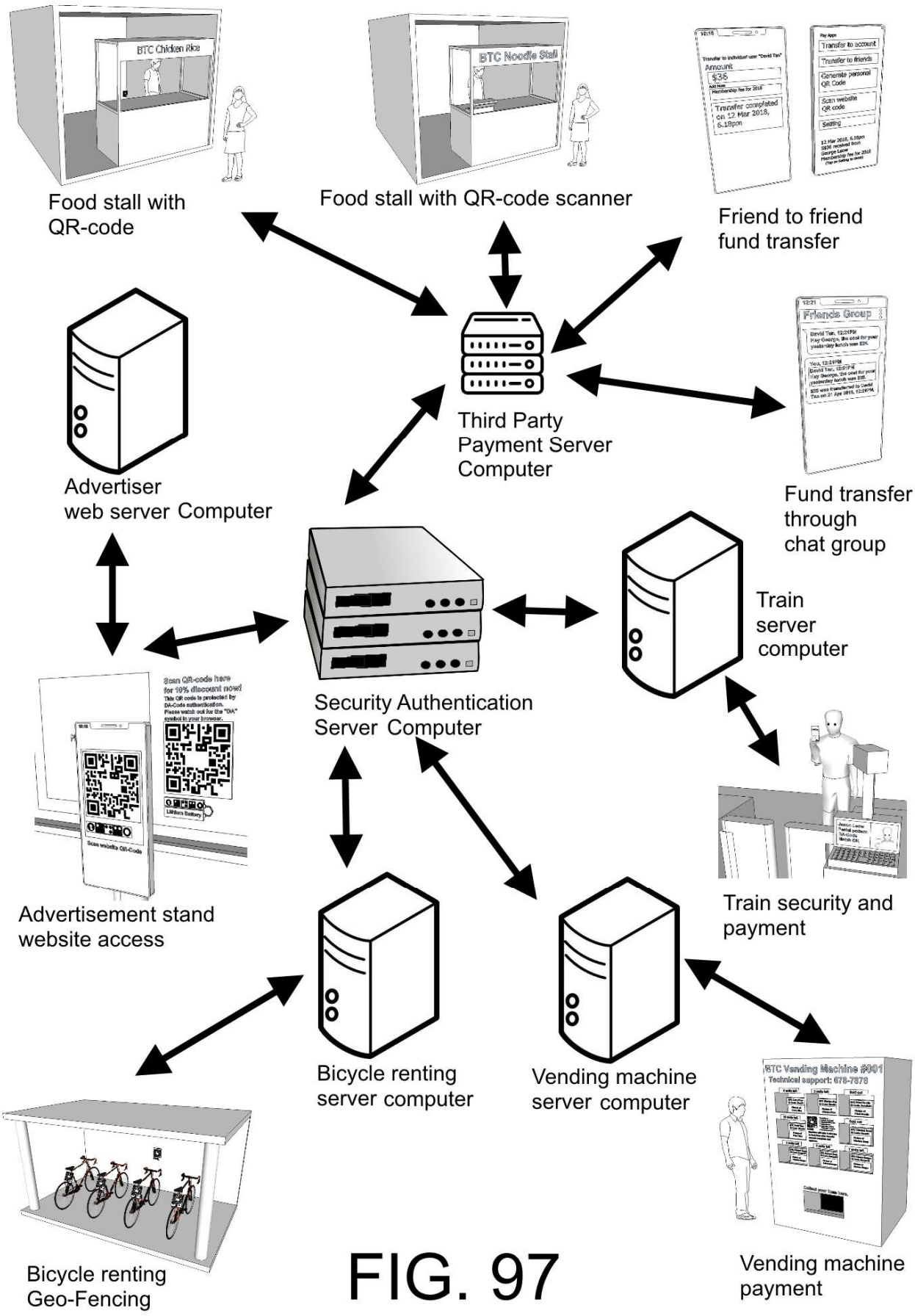
BTC Chicken Rice
Food stall with QR-code
BTC Noodle Stall
Food stall with QR-code scanner
Transfer to account
Transfer to friends
Generate personal QR Code
Scan website QR code
Setting
Transfer completed on 12 Mar 2018, 6.18pm
Friend to friend fund transfer
Third Party Payment Server Computer
Advertiser web server Computer
Friends Group
Fund transfer through chat group
Train server computer
Security Authentication Server Computer
Scan QR-code here for 10% discount now!
Advertisement stand website access
Train security and payment
Bicycle renting server computer
Vending machine server computer
BTC Vending Machine #001
Technical support: 678-7878
Bicycle renting Geo-Fencing
Vending machine payment

FIG. 97

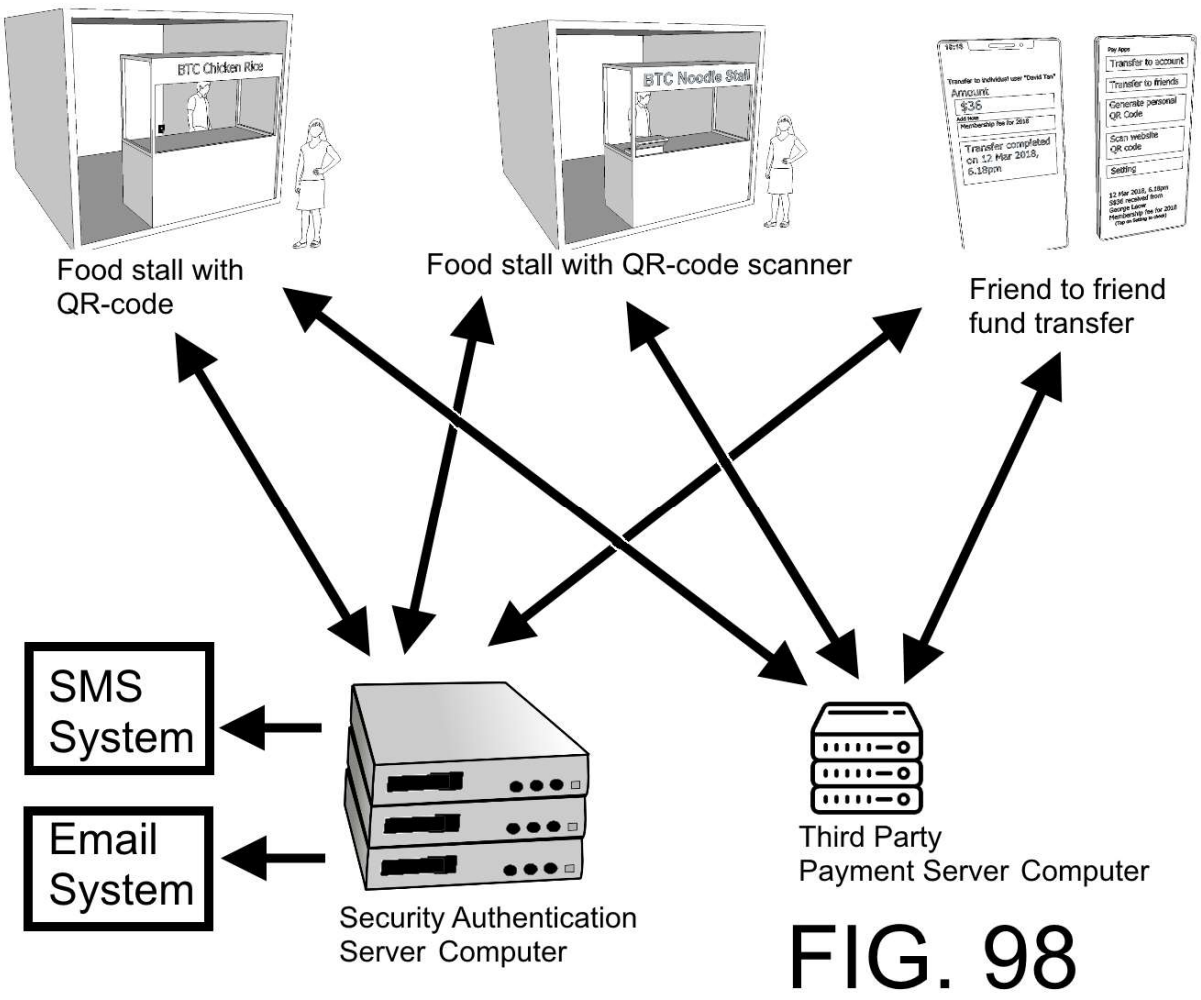
BTC Chicken Rice
BTC Noodle Stall
Food stall with QR-code
Food stall with QR-code scanner
Friend to friend fund transfer
Transfer to account
Transfer to friends
Generate personal QR Code
Scan website QR code
Setting
Amount
$36
Transfer completed on 12 Mar 2018, 6.18pm
SMS System
Email System
Security Authentication Server Computer
Third Party Payment Server Computer

FIG. 98

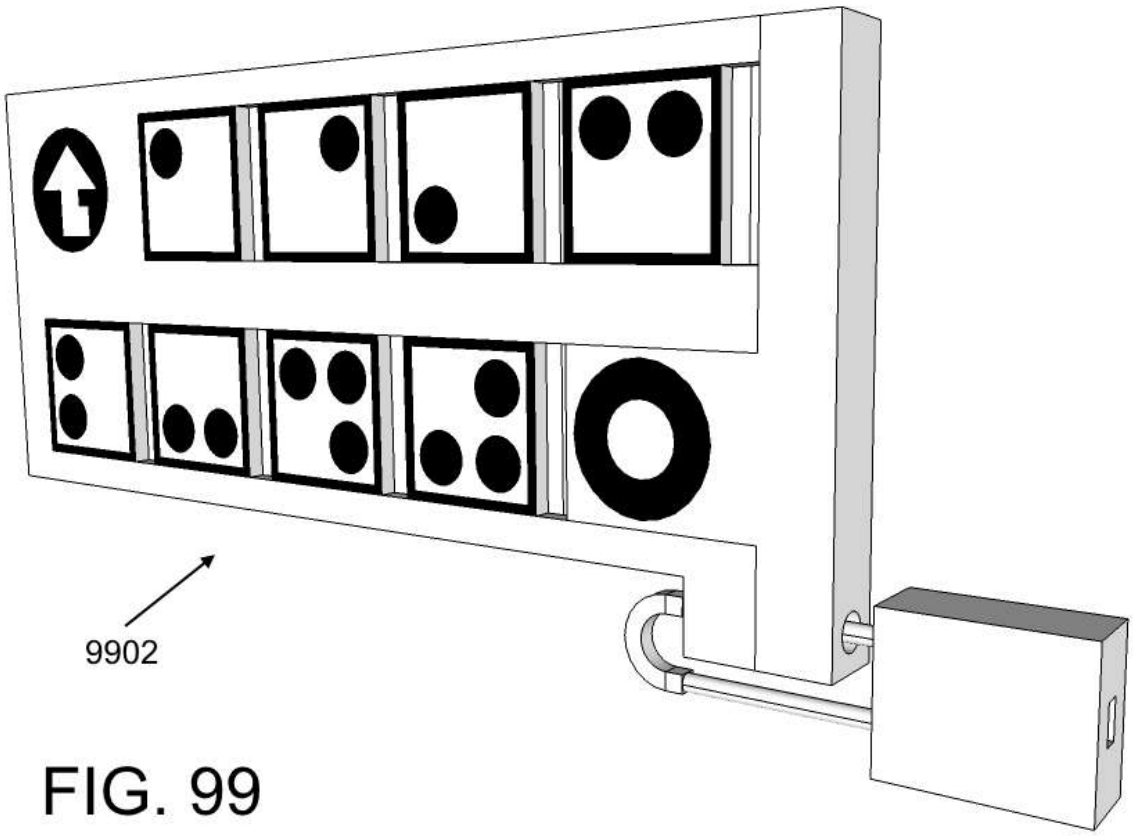

FIG. 99

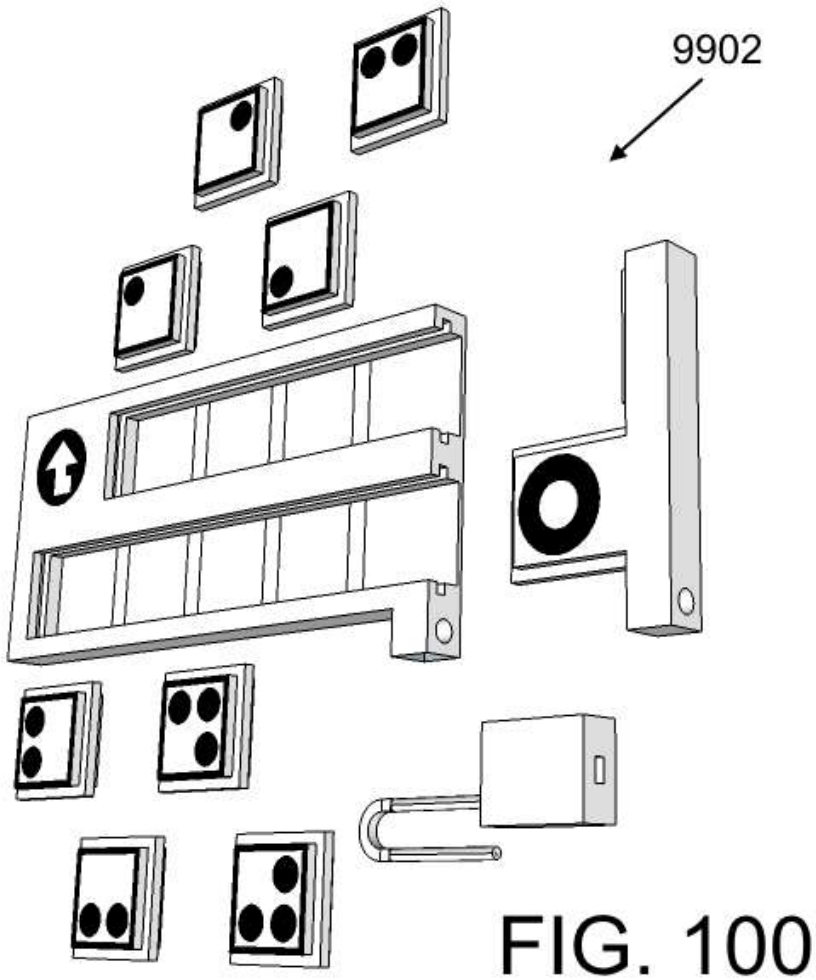

FIG. 100

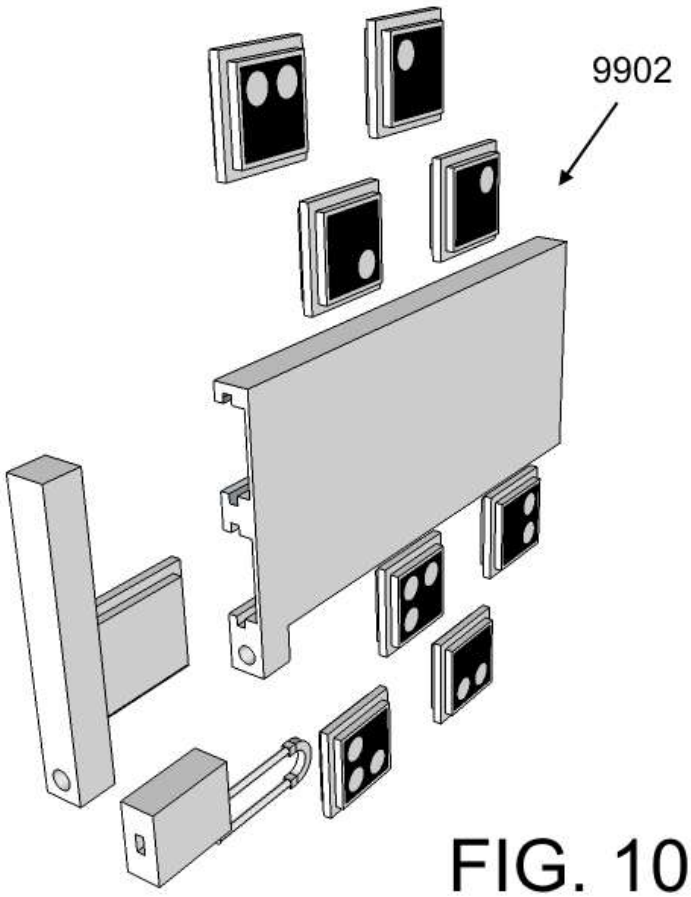

FIG. 101

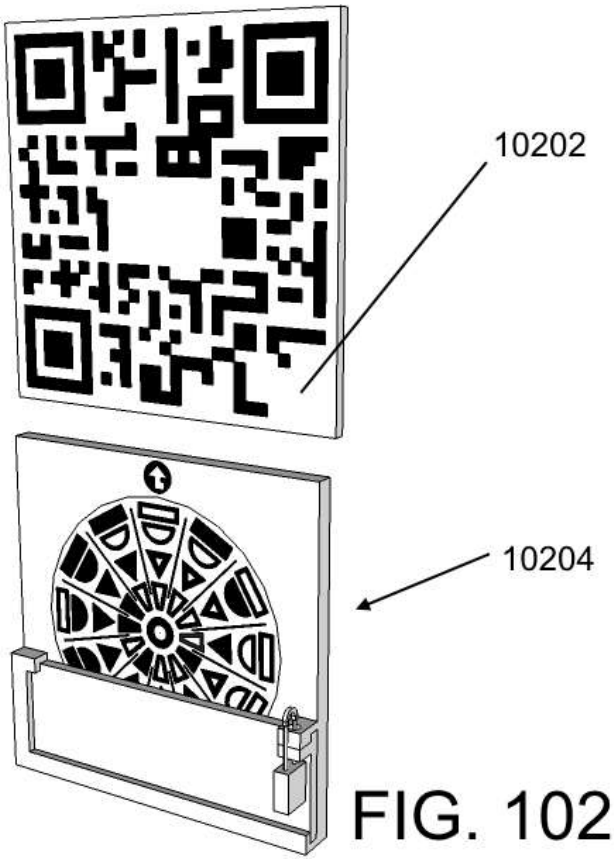

FIG. 102

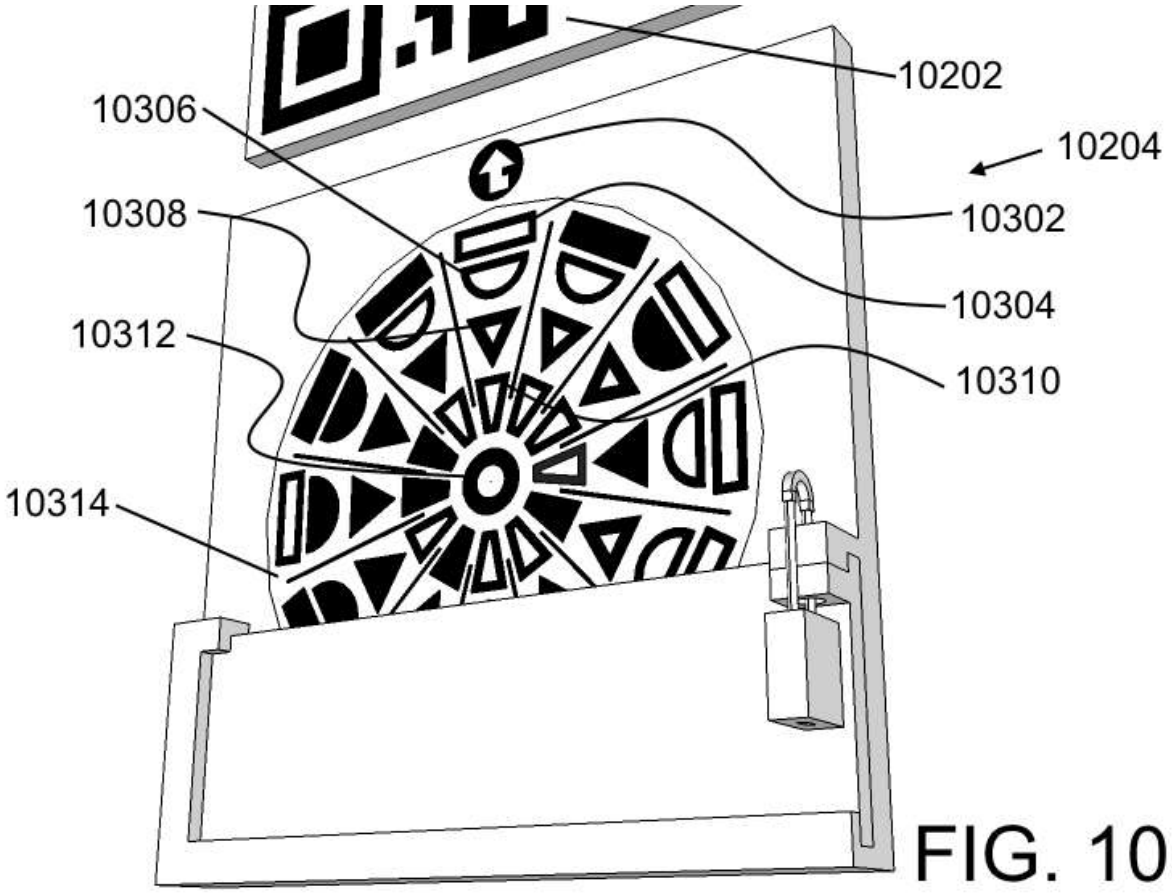

FIG. 103

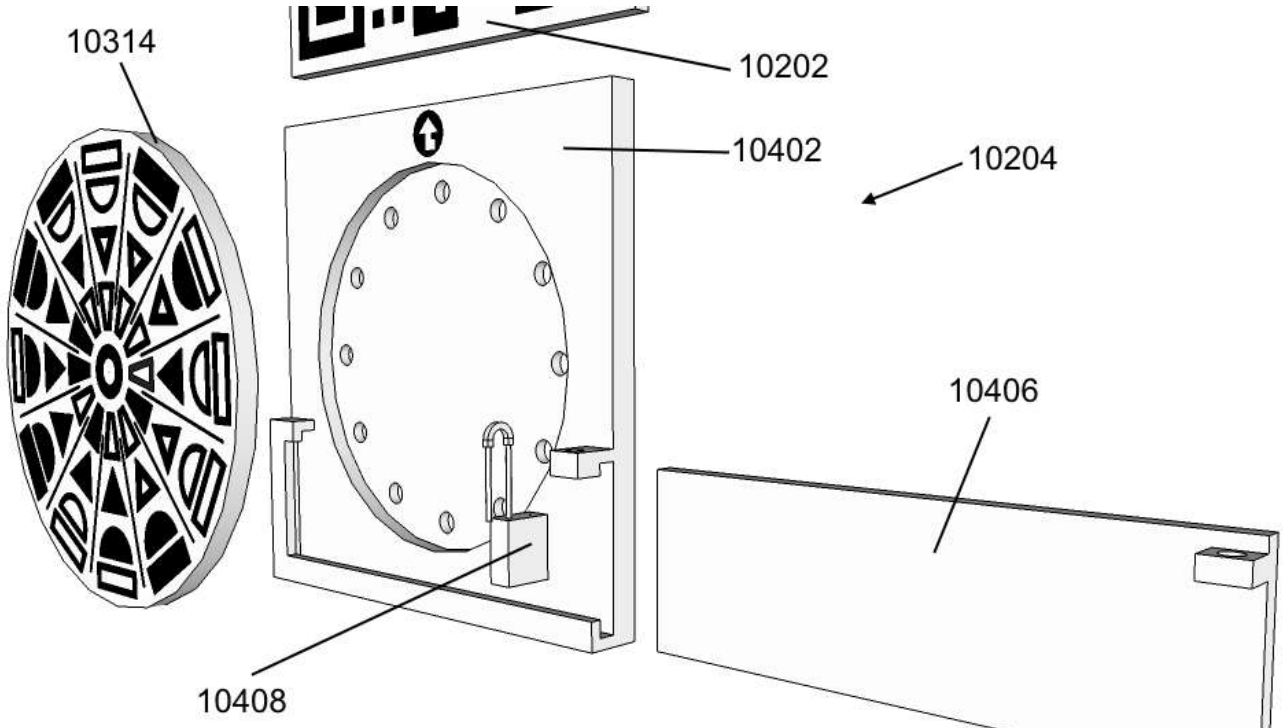

FIG. 104

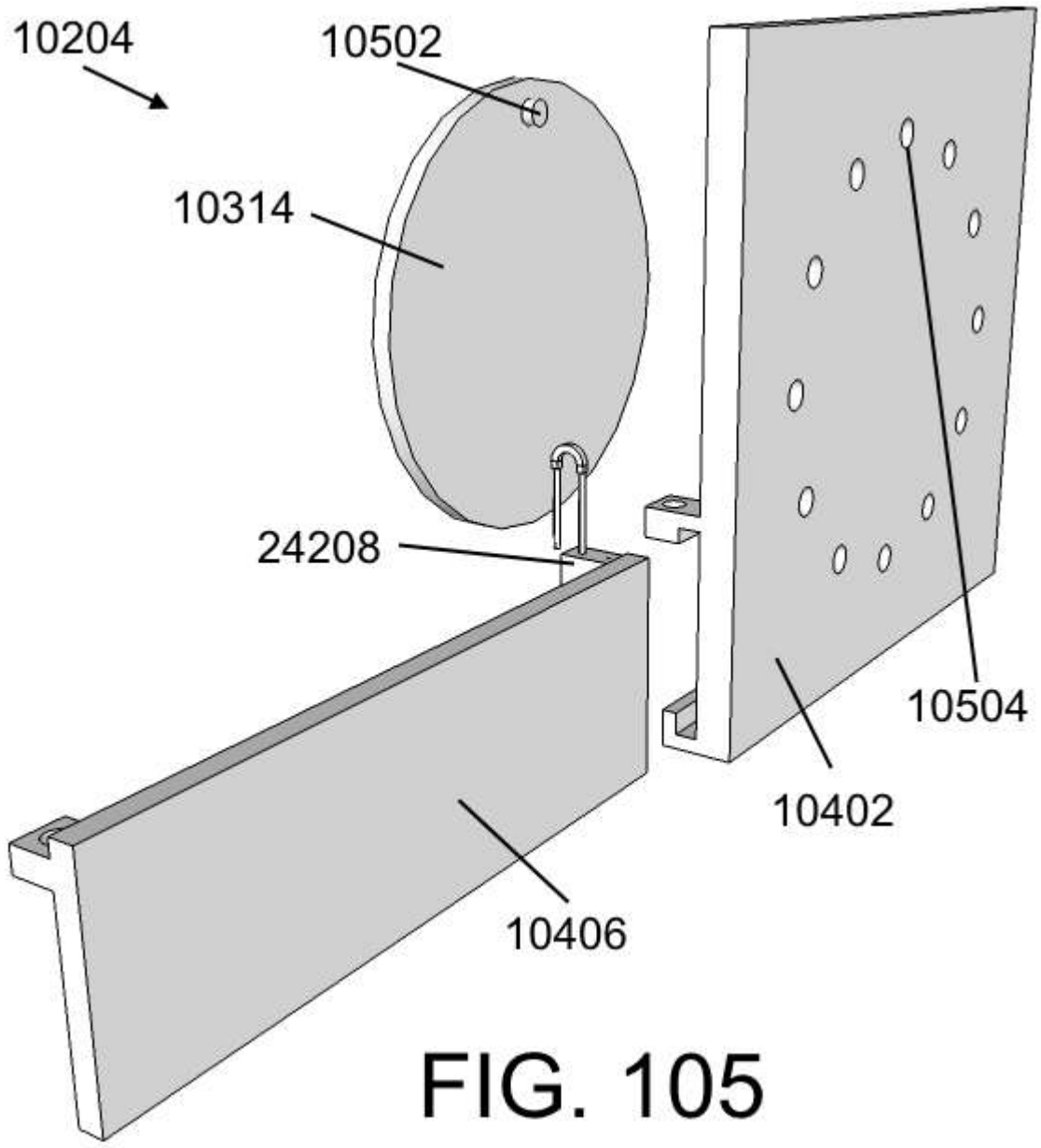

FIG. 105

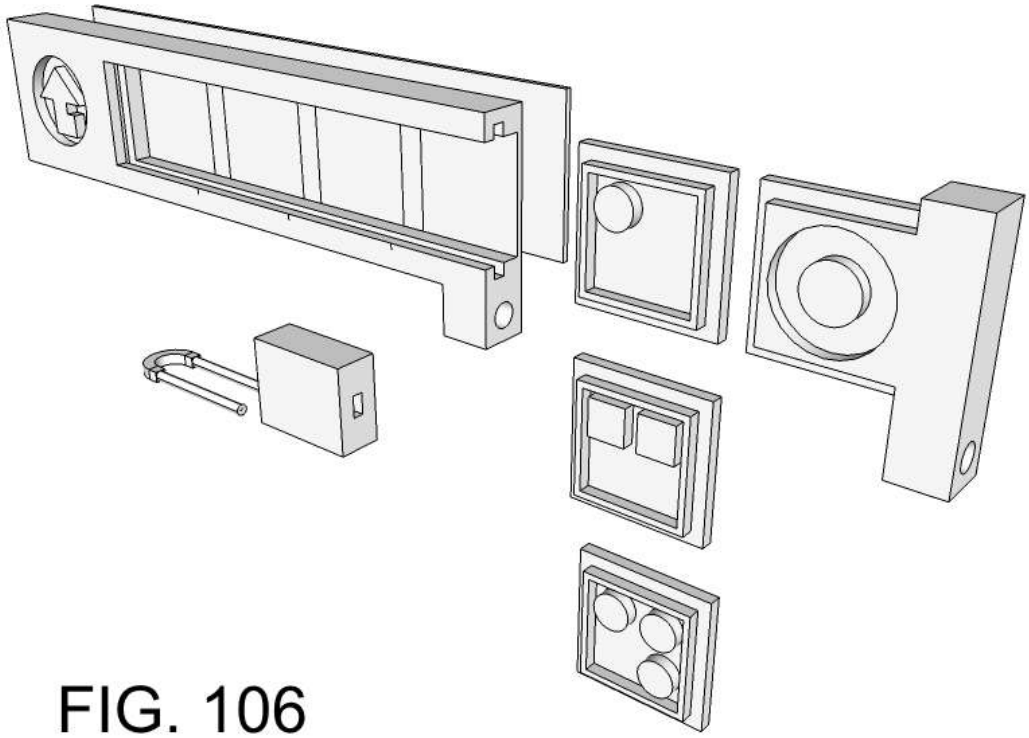

FIG. 106

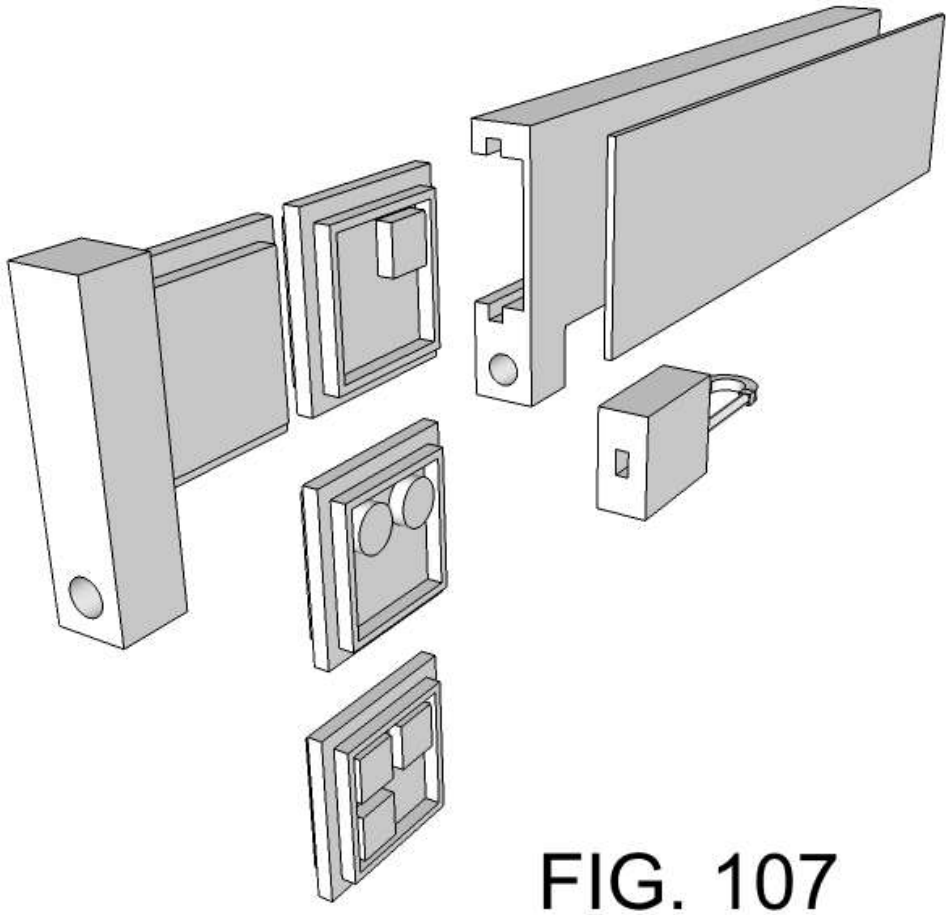

FIG. 107

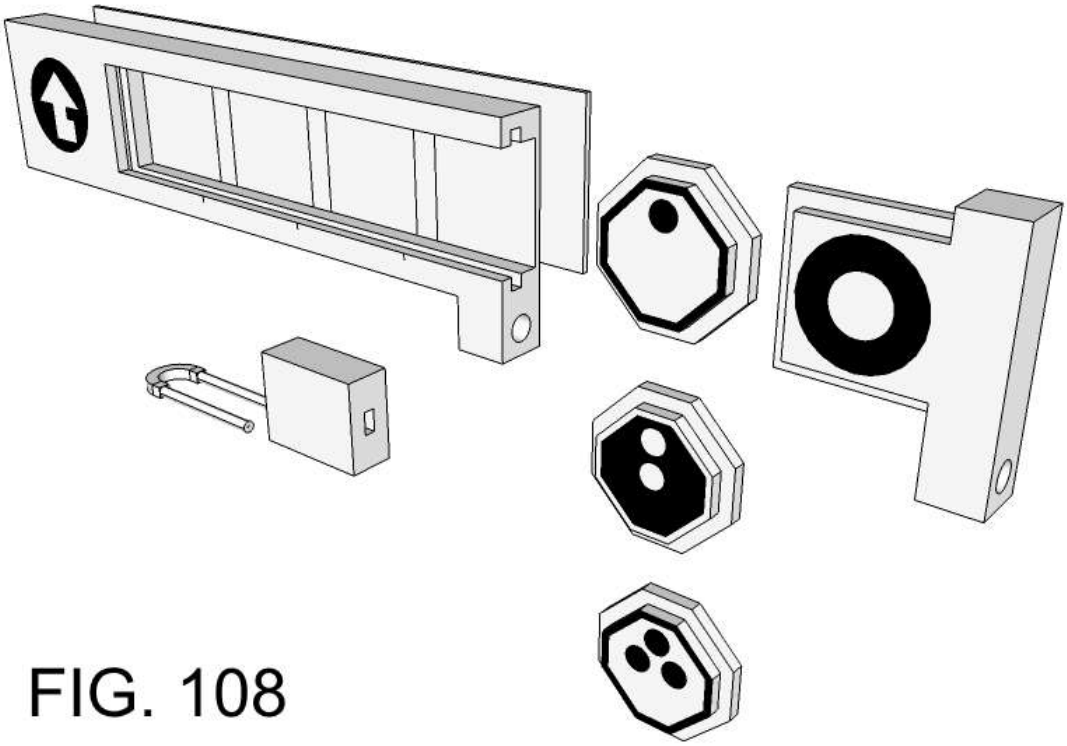

FIG. 108

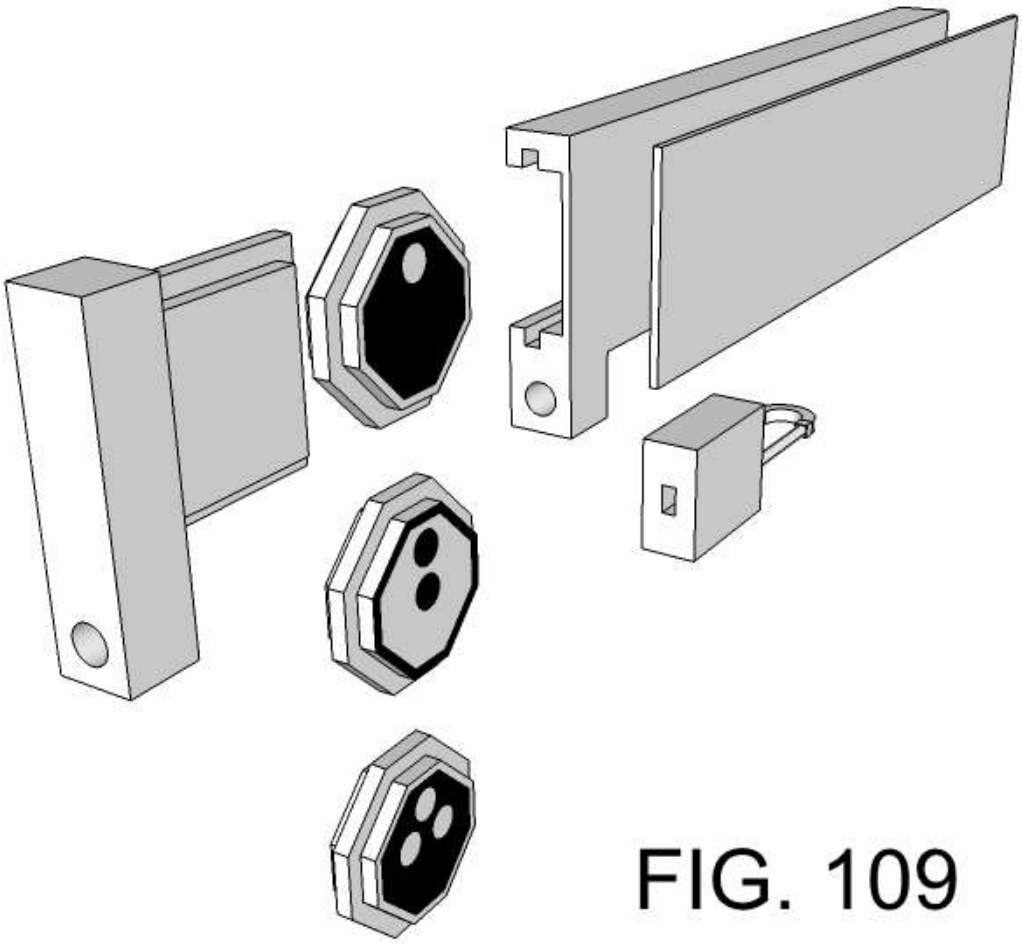

FIG. 109