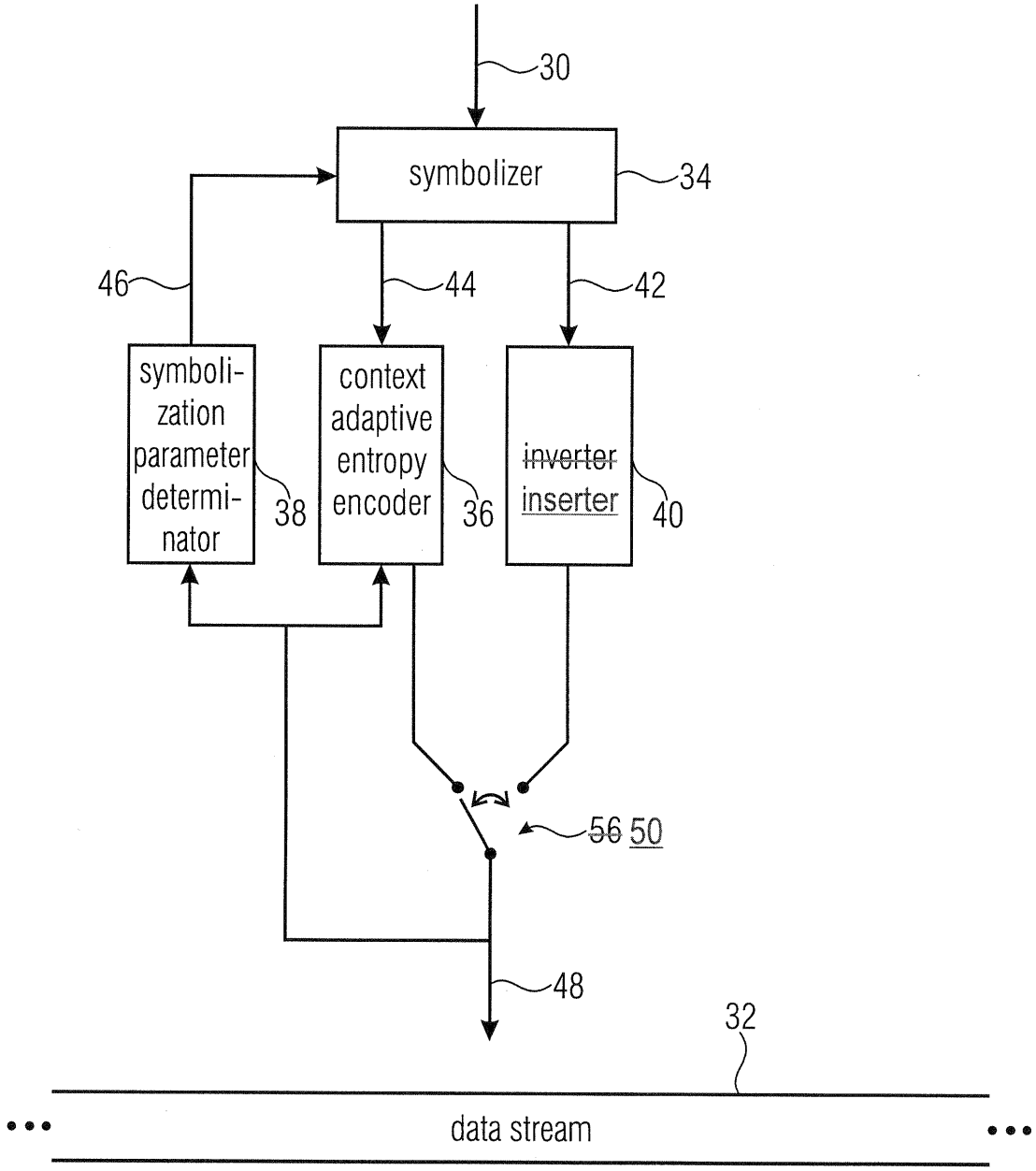
30
symbolizer
34
46
44
42
symboli-
zation
parameter
determi-
nator
38
context
adaptive
entropy
encoder
36
inverter
inserter
40
56 50
48
32
data stream

FIGURE 4

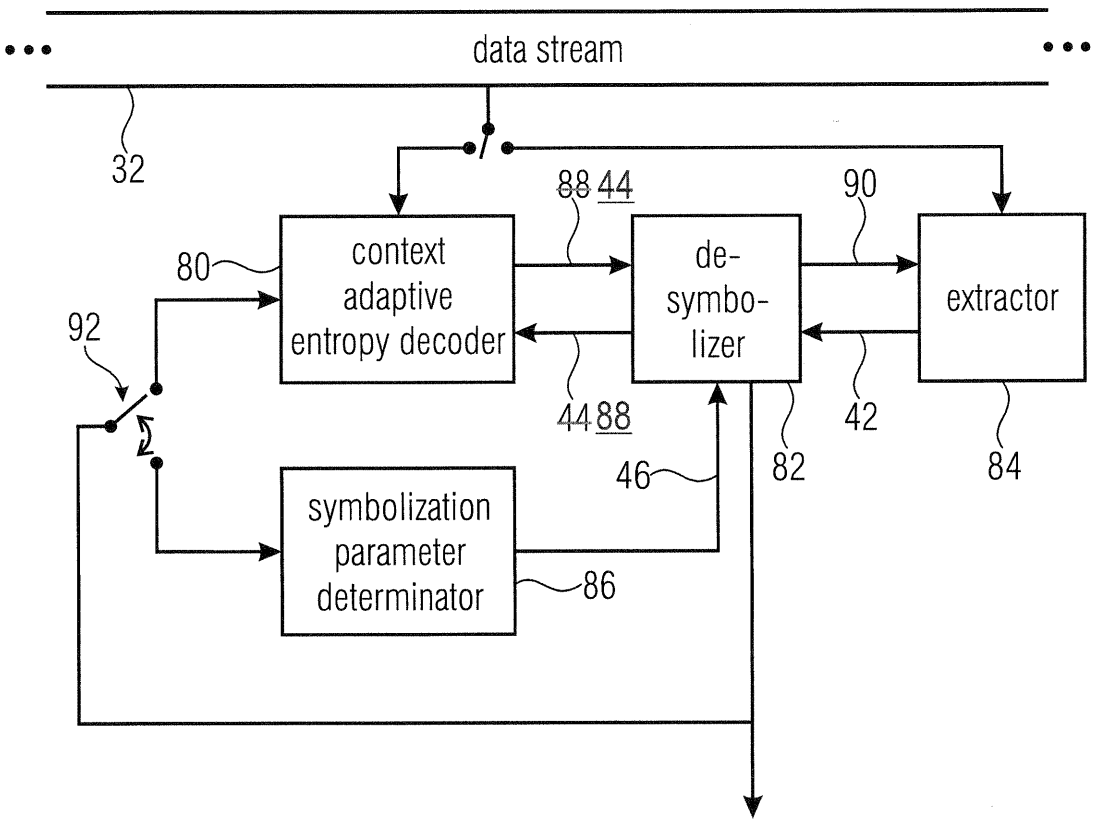

FIGURE ~~10~~ 7

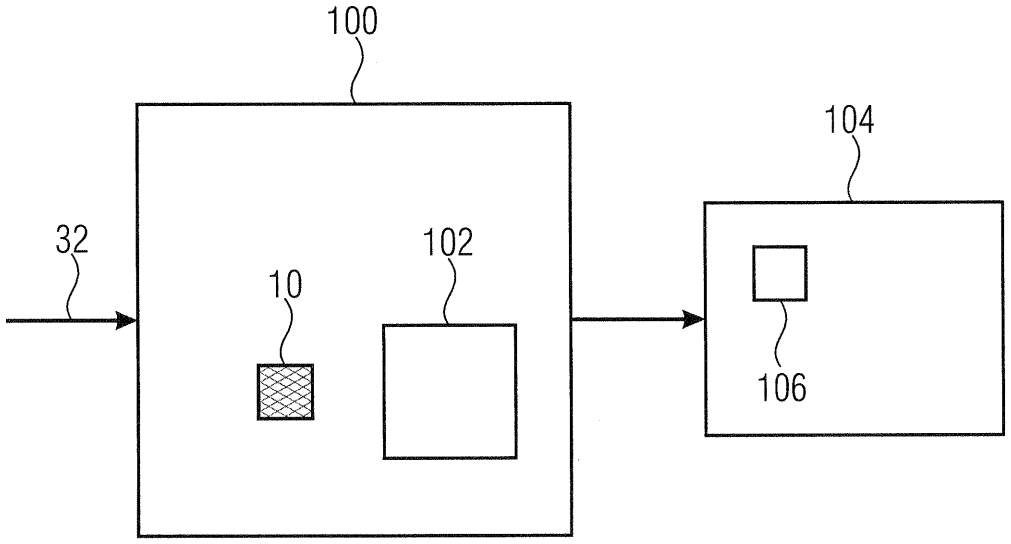

FIGURE 8

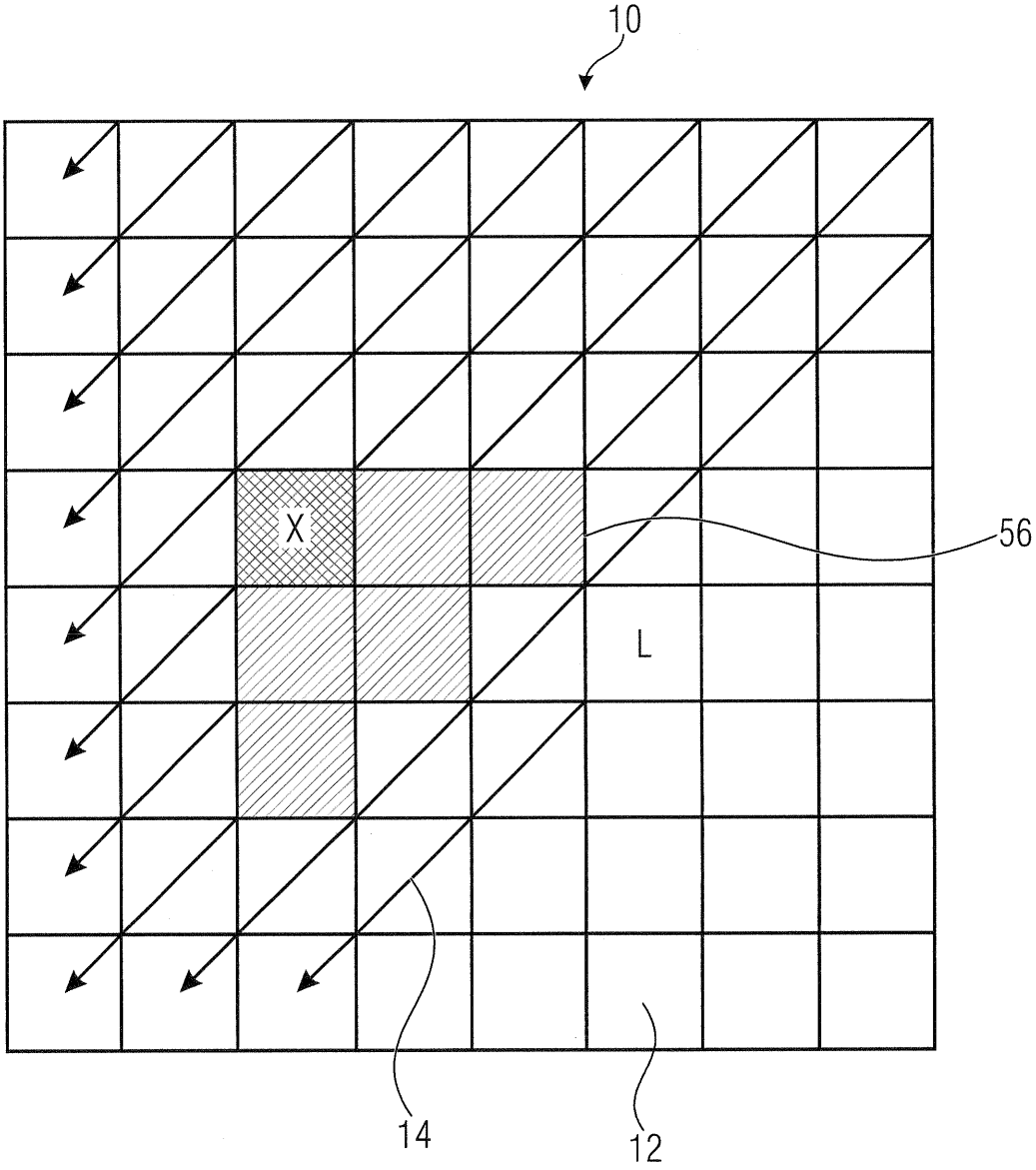

FIGURE ~~8~~ 9