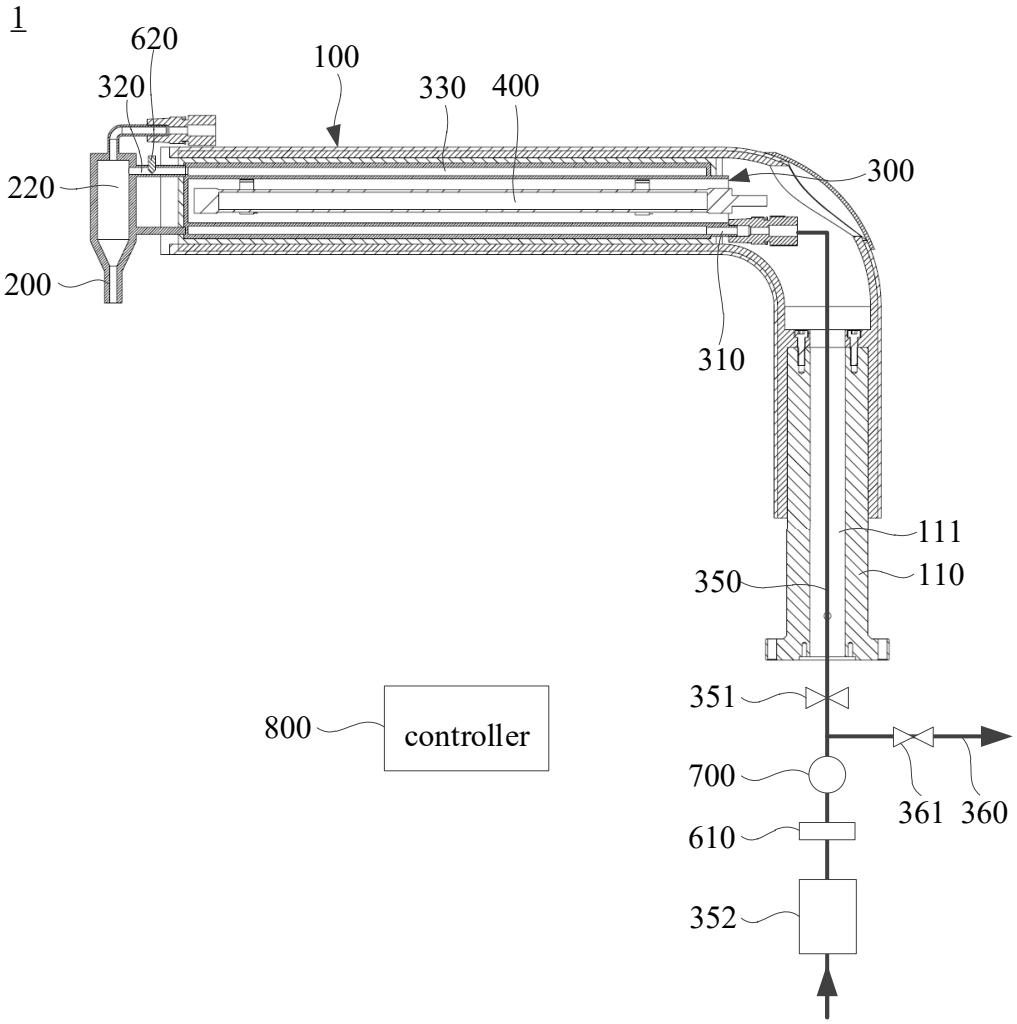
1
620
320
100
330
400
220
300
200
310
111
350
110
800
controller
351
700
361
360
610
352

FIG. 1

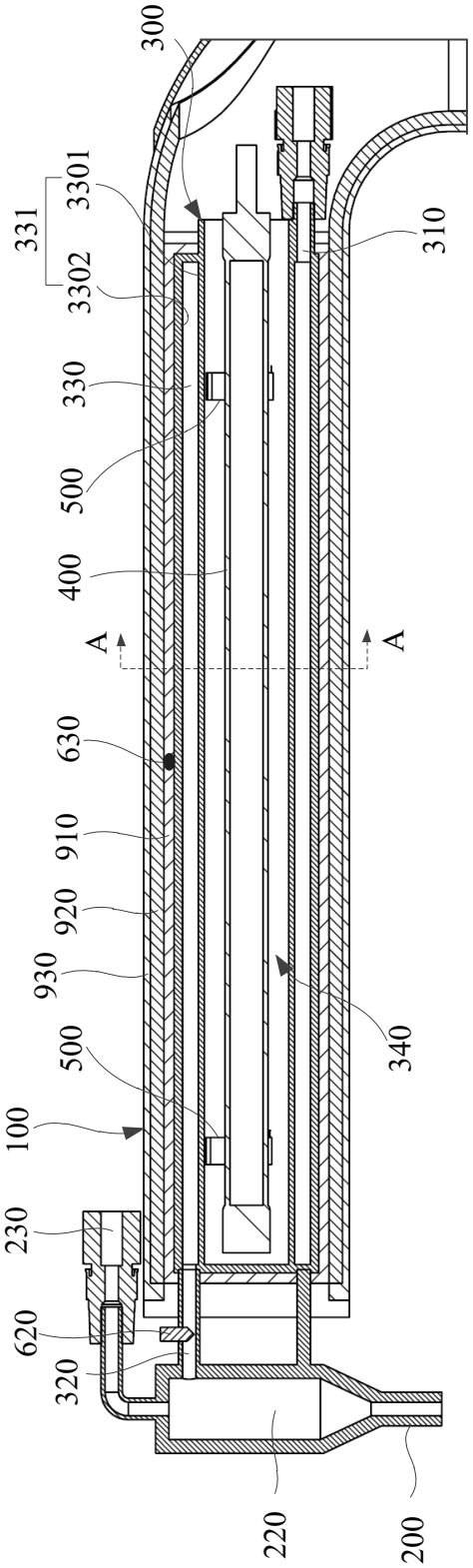
300
3301
331
3302
310
330
500
400
A
A
630
910
920
930
500
340
100
230
620
320
220
200

FIG. 2

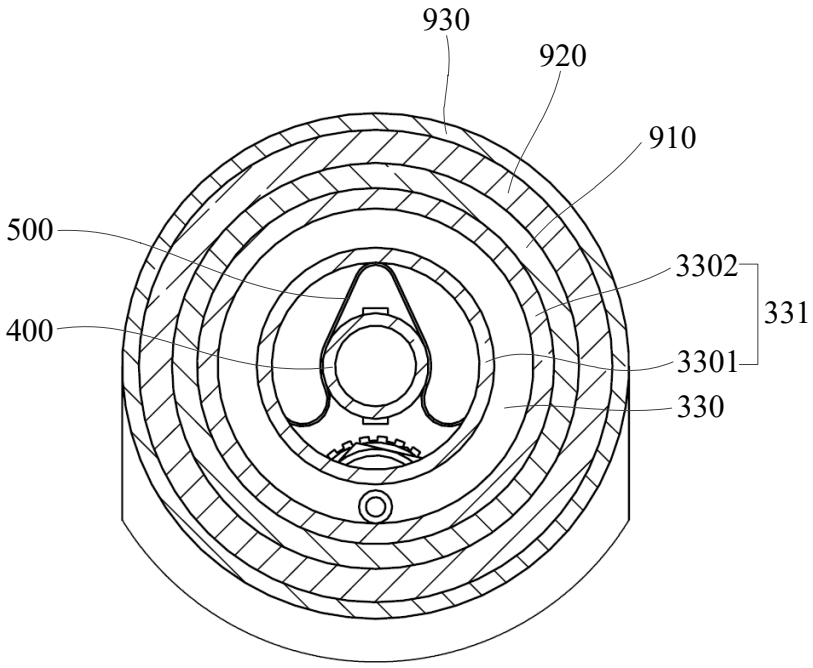


FIG. 3a

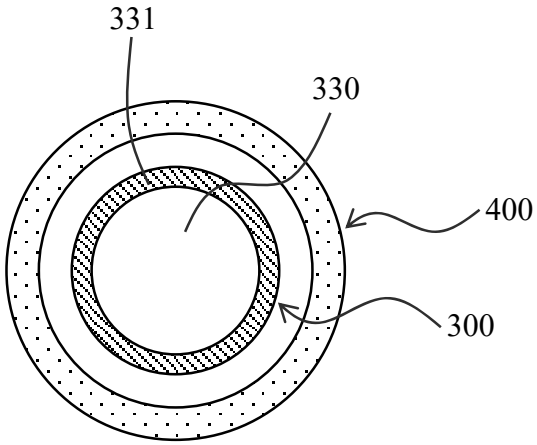


FIG. 3b

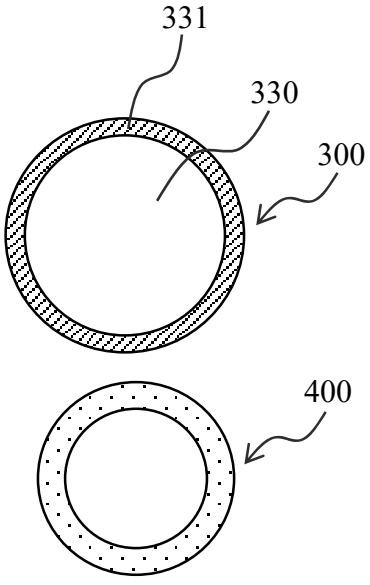


FIG. 3c

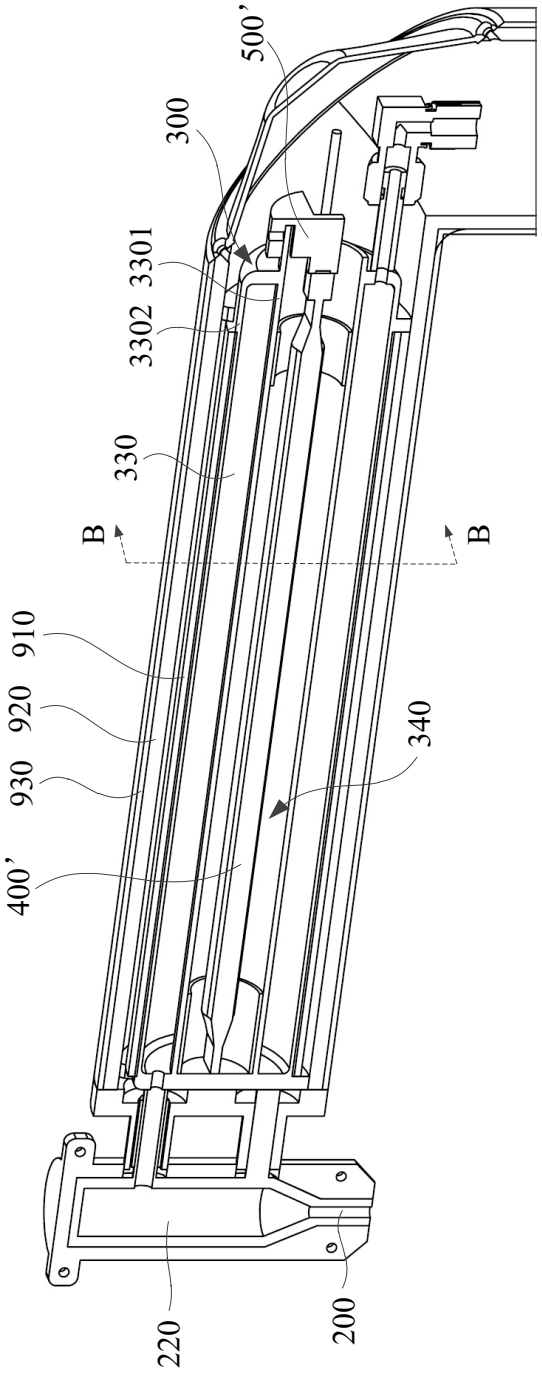


FIG. 4

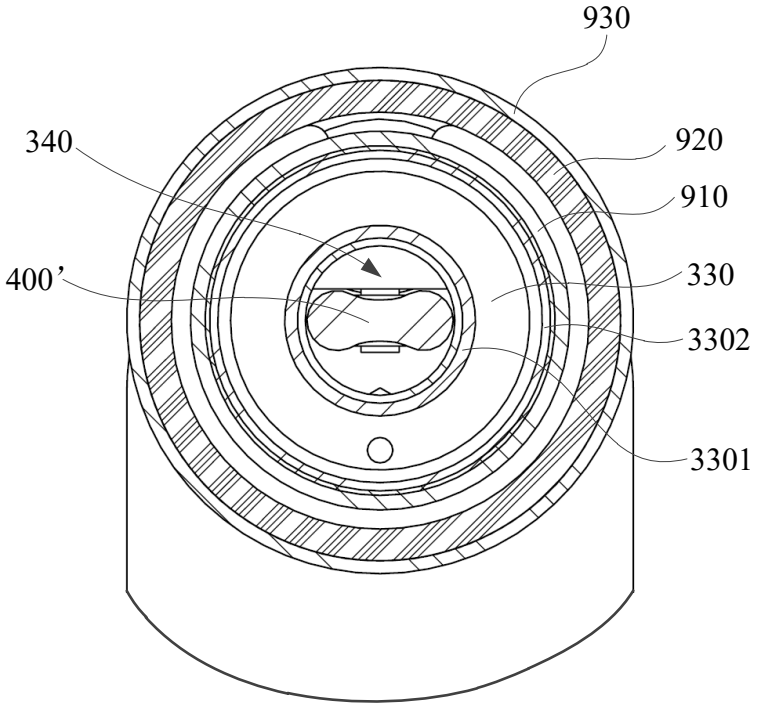


FIG. 5

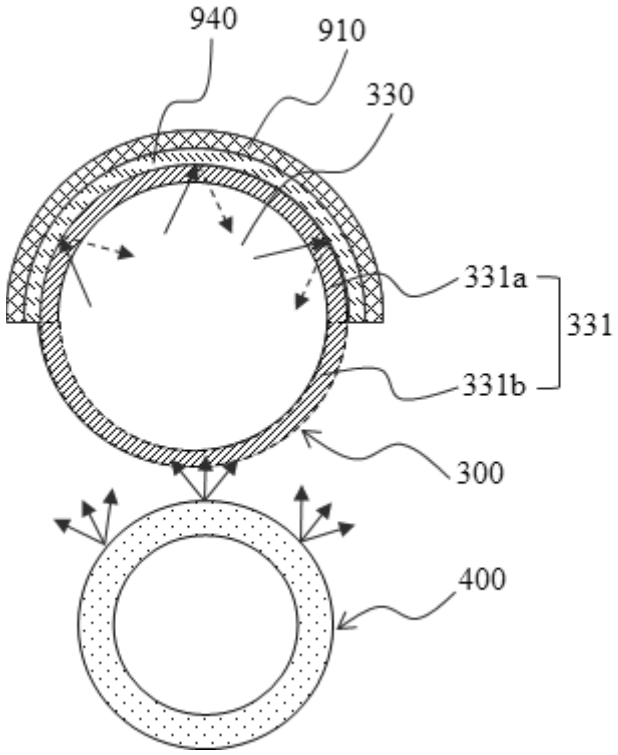


FIG. 6

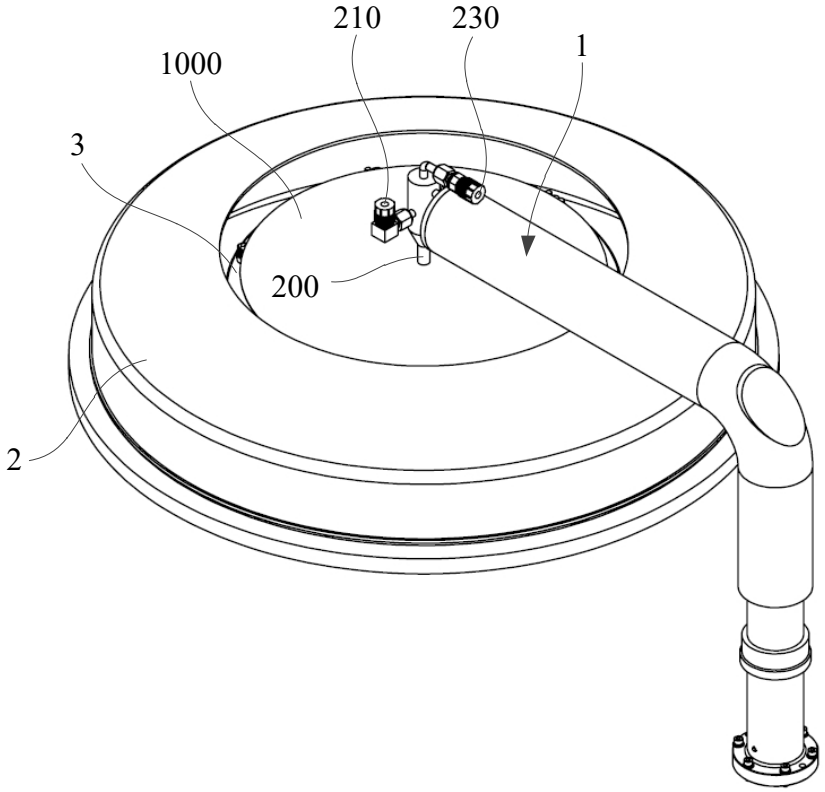


FIG. 7


Start
Rotate the substrate
S01
Open the fluid branch to supply hydrogen peroxide to the substrate
S02
Open the first control valve and close the second control valve
S03
Supply sulfuric acid into the flow channel
S04
Turn on the heating lamp to heat the sulfuric acid inside the flow channel
S05
Perform SPM treatment on the substrate
S06
After completing the SPM treatment on the substrate, turn off the heating lamp
S07
Close the first control valve and open the second control valve
S08
Close the fluid branch to stop supplying hydrogen peroxide to the substrate
S09
End

FIG. 8