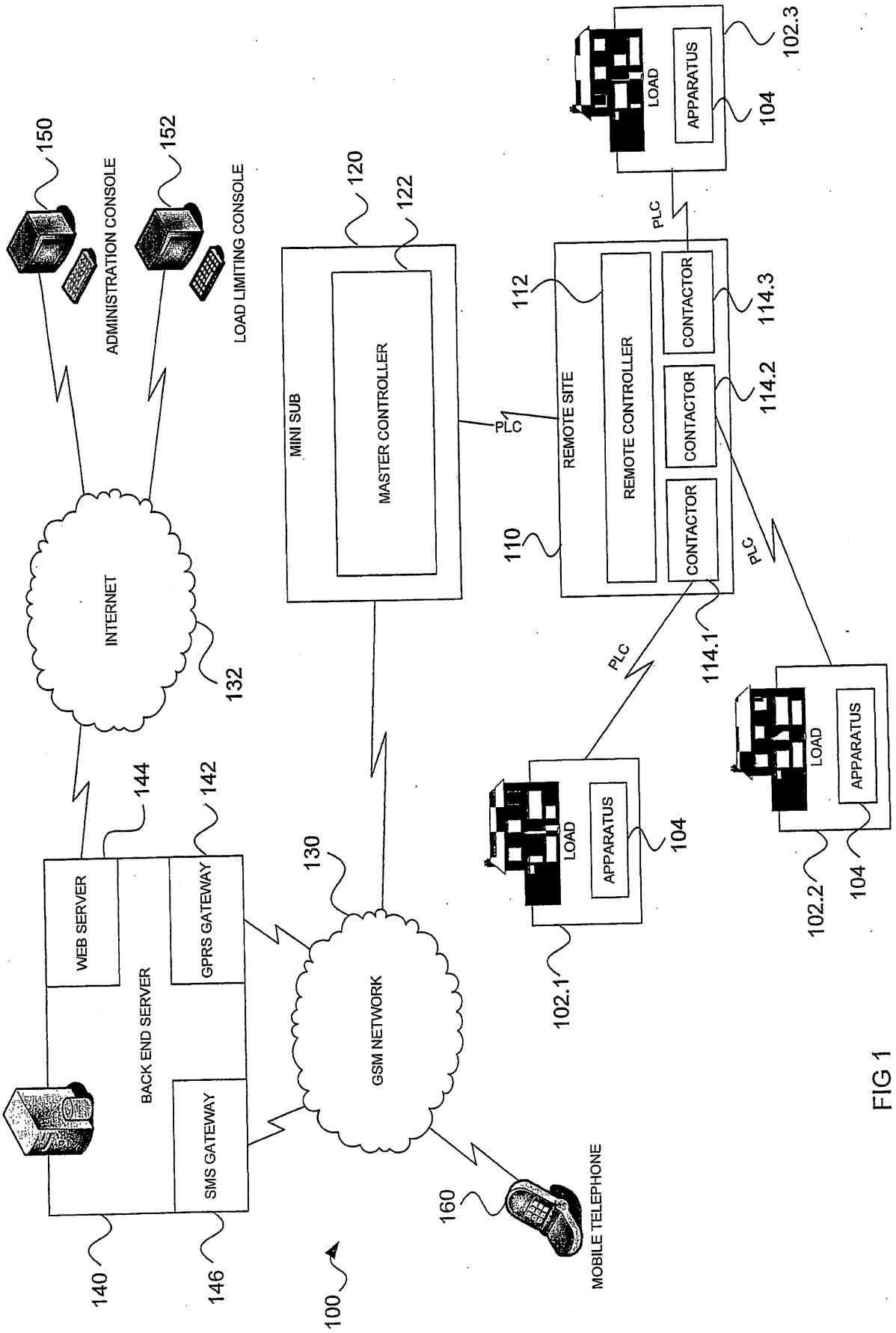
150
ADMINISTRATION CONSOLE
152
LOAD LIMITING CONSOLE
120
122
MINI SUB
MASTER CONTROLLER
INTERNET
132
144
142
WEB SERVER
GPRS GATEWAY
BACK END SERVER
SMS GATEWAY
130
GSM NETWORK
140
146
100
160
MOBILE TELEPHONE
PLC
112
REMOTE SITE
REMOTE CONTROLLER
CONTACTOR
CONTACTOR
CONTACTOR
110
114.1
114.2
114.3
LOAD
APPARATUS
104
102.1
102.2
102.3

FIG 1

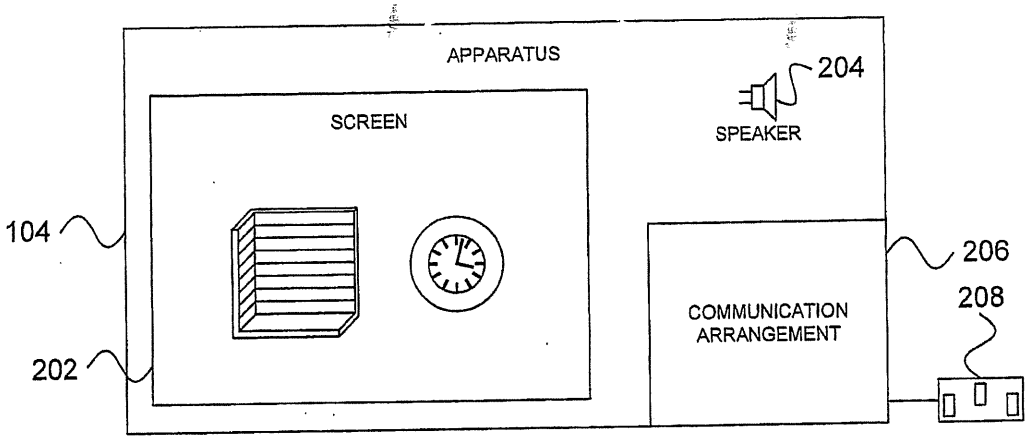
APPARATUS
204
SCREEN
SPEAKER
104
206
208
COMMUNICATION ARRANGEMENT
202

FIG 2

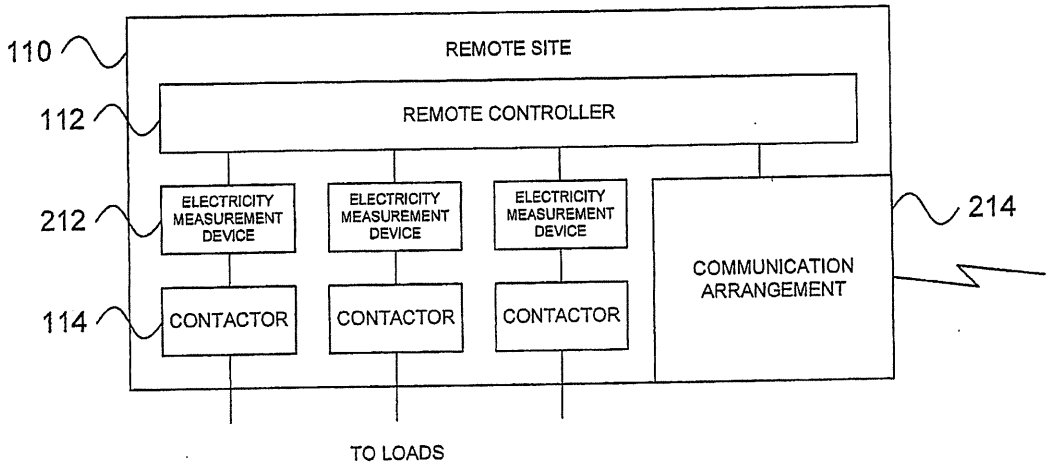
110
REMOTE SITE
112
REMOTE CONTROLLER
212
ELECTRICITY MEASUREMENT DEVICE
ELECTRICITY MEASUREMENT DEVICE
ELECTRICITY MEASUREMENT DEVICE
214
COMMUNICATION ARRANGEMENT
114
CONTACTOR
CONTACTOR
CONTACTOR
TO LOADS

FIG 3

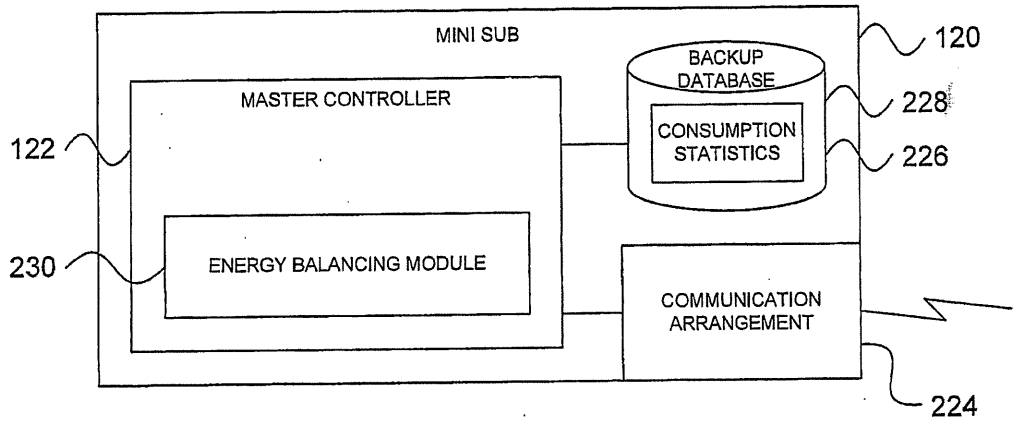
MINI SUB
120
BACKUP DATABASE
228
MASTER CONTROLLER
CONSUMPTION STATISTICS
226
122
230
ENERGY BALANCING MODULE
COMMUNICATION ARRANGEMENT
224

FIG 4

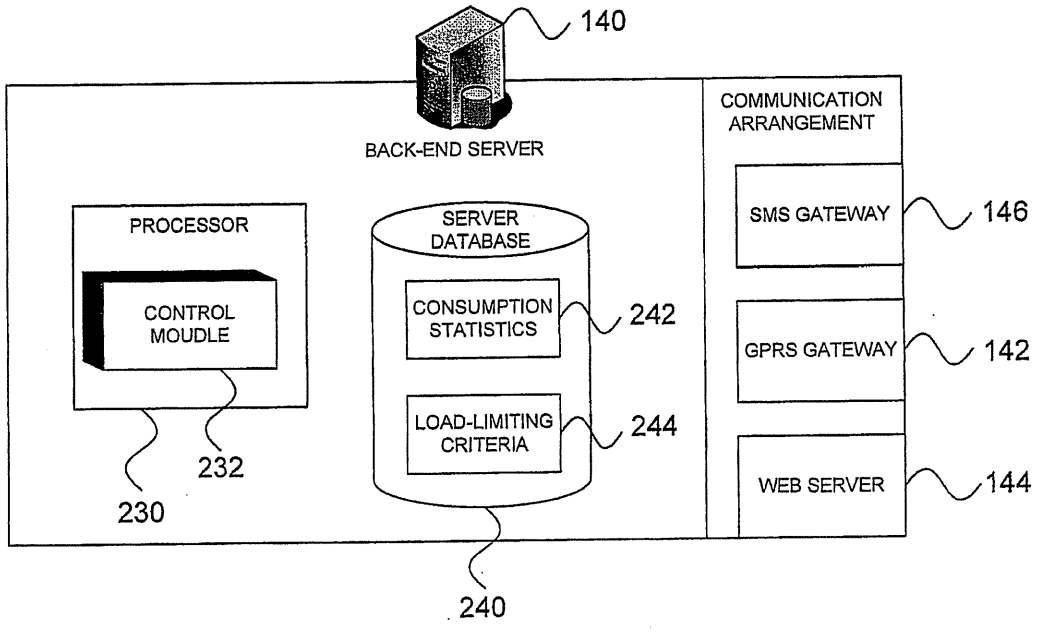
140
BACK-END SERVER
COMMUNICATION ARRANGEMENT
PROCESSOR
SERVER DATABASE
SMS GATEWAY
146
CONTROL MOUDLE
CONSUMPTION STATISTICS
242
GPRS GATEWAY
142
LOAD-LIMITING CRITERIA
244
WEB SERVER
144
232
230
240

FIG 5

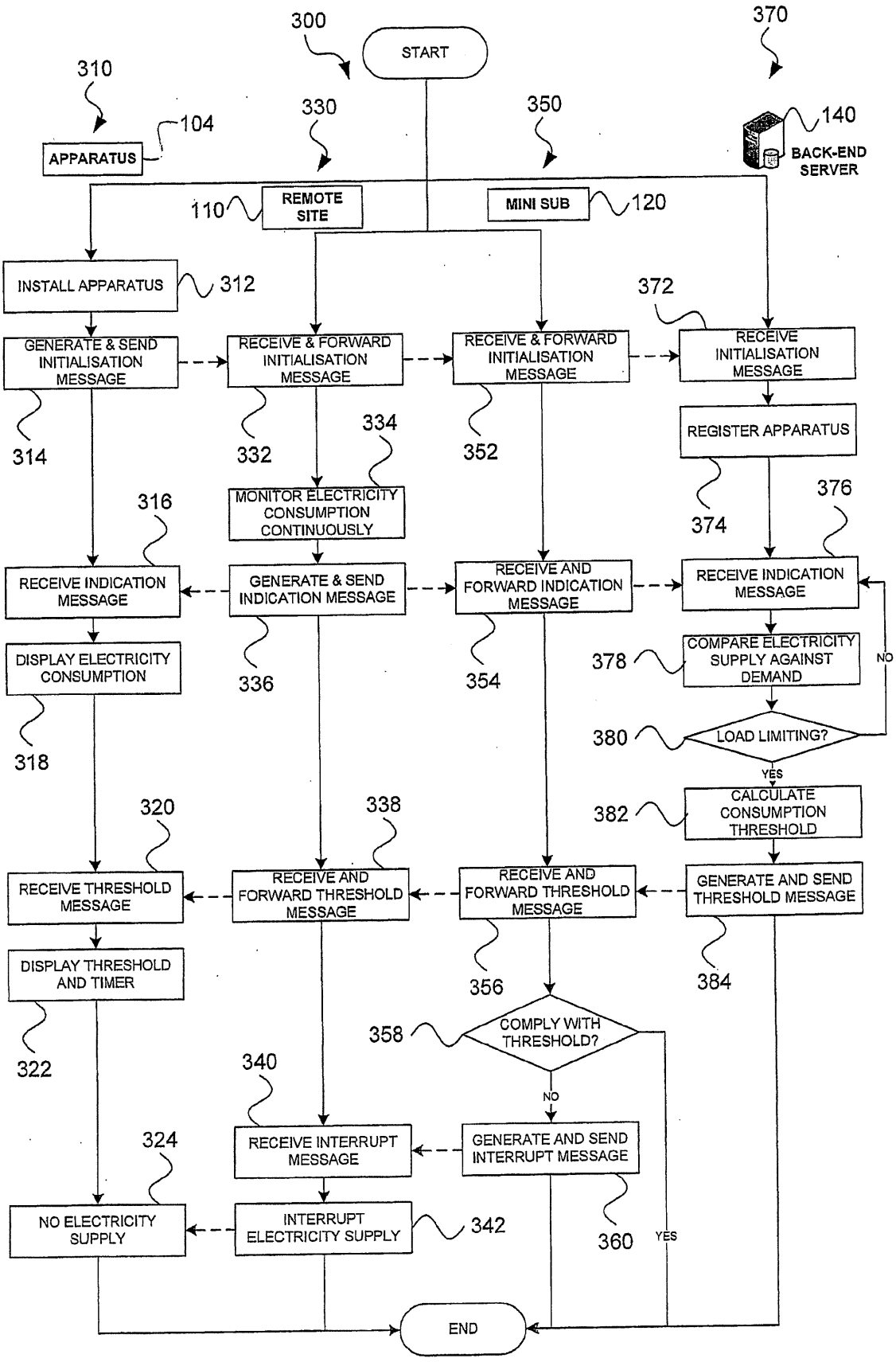
300
START
370
310
330
350
140
104
APPARATUS
BACK-END SERVER
110
REMOTE SITE
MINI SUB
120
INSTALL APPARATUS
312
372
GENERATE & SEND INITIALISATION MESSAGE
RECEIVE & FORWARD INITIALISATION MESSAGE
RECEIVE & FORWARD INITIALISATION MESSAGE
RECEIVE INITIALISATION MESSAGE
REGISTER APPARATUS
314
332
334
352
374
376
316
MONITOR ELECTRICITY CONSUMPTION CONTINUOUSLY
RECEIVE INDICATION MESSAGE
GENERATE & SEND INDICATION MESSAGE
RECEIVE AND FORWARD INDICATION MESSAGE
RECEIVE INDICATION MESSAGE
DISPLAY ELECTRICITY CONSUMPTION
336
354
378
COMPARE ELECTRICITY SUPPLY AGAINST DEMAND
NO
318
380
LOAD LIMITING?
YES
320
338
382
CALCULATE CONSUMPTION THRESHOLD
RECEIVE THRESHOLD MESSAGE
RECEIVE AND FORWARD THRESHOLD MESSAGE
RECEIVE AND FORWARD THRESHOLD MESSAGE
GENERATE AND SEND THRESHOLD MESSAGE
DISPLAY THRESHOLD AND TIMER
356
384
358
COMPLY WITH THRESHOLD?
322
340
NO
324
RECEIVE INTERRUPT MESSAGE
GENERATE AND SEND INTERRUPT MESSAGE
NO ELECTRICITY SUPPLY
INTERRUPT ELECTRICITY SUPPLY
342
360
YES
END

FIG 6

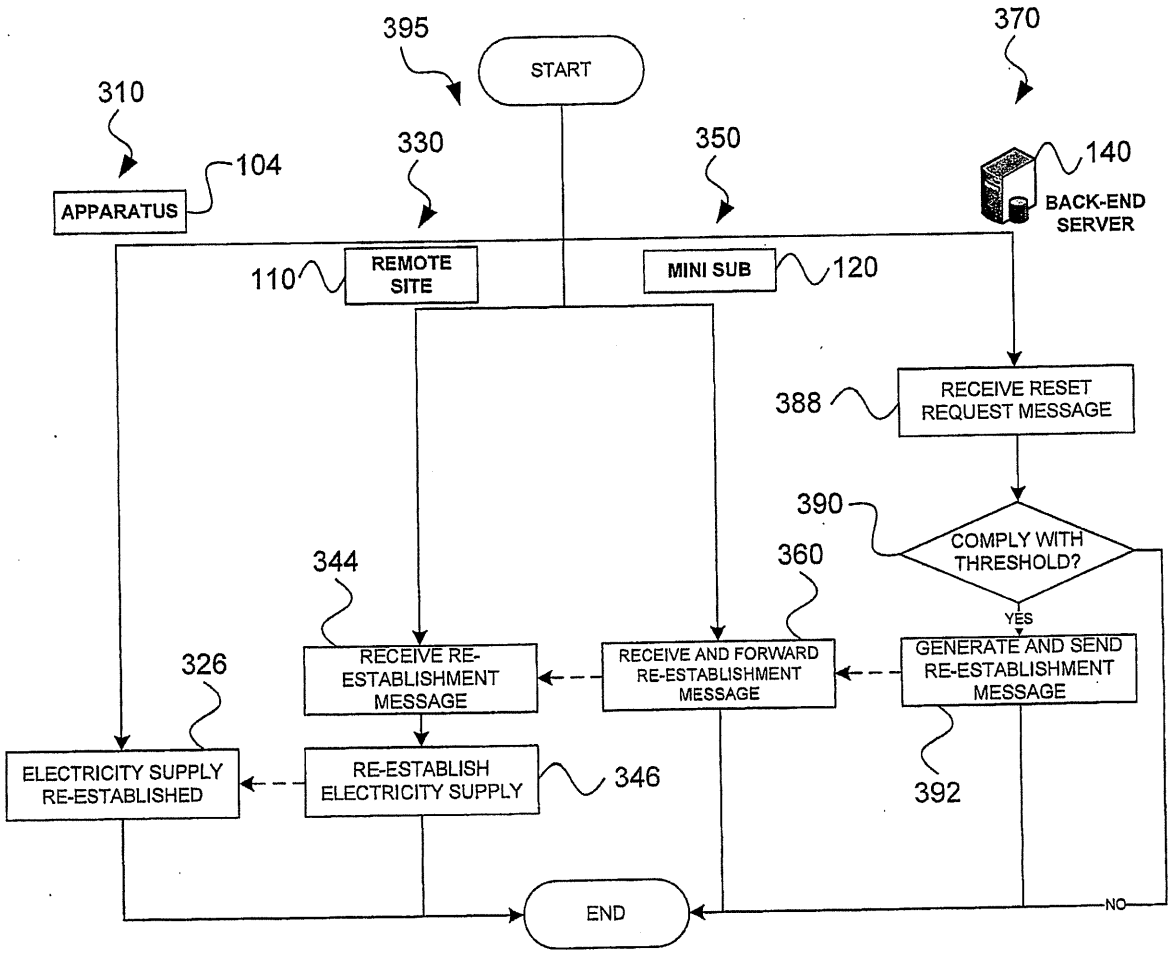
395
START
370
310
330
350
140
104
APPARATUS
BACK-END SERVER
110
REMOTE SITE
MINI SUB
120
388
RECEIVE RESET REQUEST MESSAGE
390
COMPLY WITH THRESHOLD?
YES
344
360
326
RECEIVE RE-ESTABLISHMENT MESSAGE
RECEIVE AND FORWARD RE-ESTABLISHMENT MESSAGE
GENERATE AND SEND RE-ESTABLISHMENT MESSAGE
ELECTRICITY SUPPLY RE-ESTABLISHED
RE-ESTABLISH ELECTRICITY SUPPLY
346
392
END
NO

FIG 7

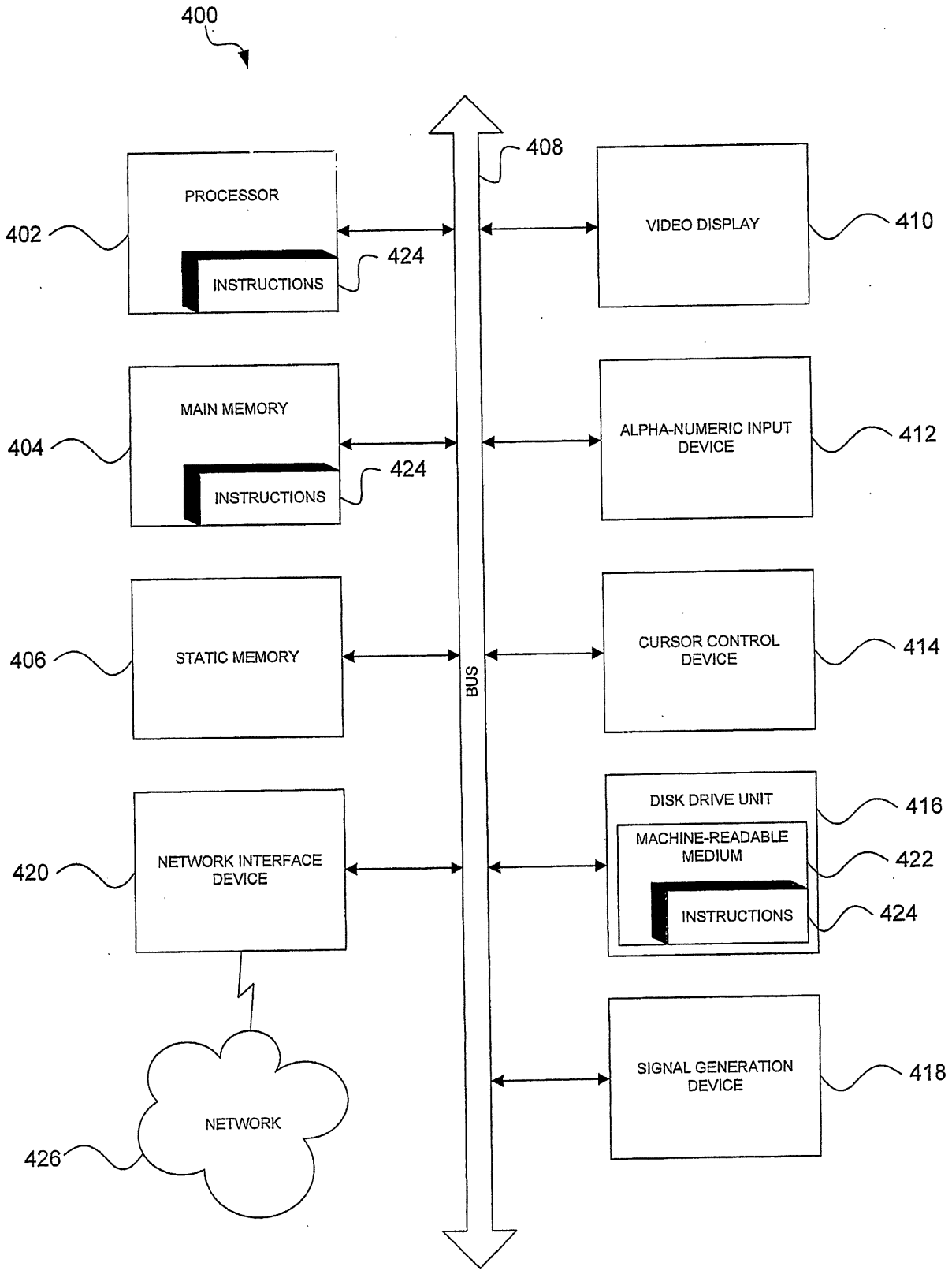
400
PROCESSOR
402
INSTRUCTIONS
424
MAIN MEMORY
404
INSTRUCTIONS
424
STATIC MEMORY
406
NETWORK INTERFACE DEVICE
420
NETWORK
426
BUS
408
VIDEO DISPLAY
410
ALPHA-NUMERIC INPUT DEVICE
412
CURSOR CONTROL DEVICE
414
DISK DRIVE UNIT
416
MACHINE-READABLE MEDIUM
422
INSTRUCTIONS
424
SIGNAL GENERATION DEVICE
418

FIG 8