Figure 1

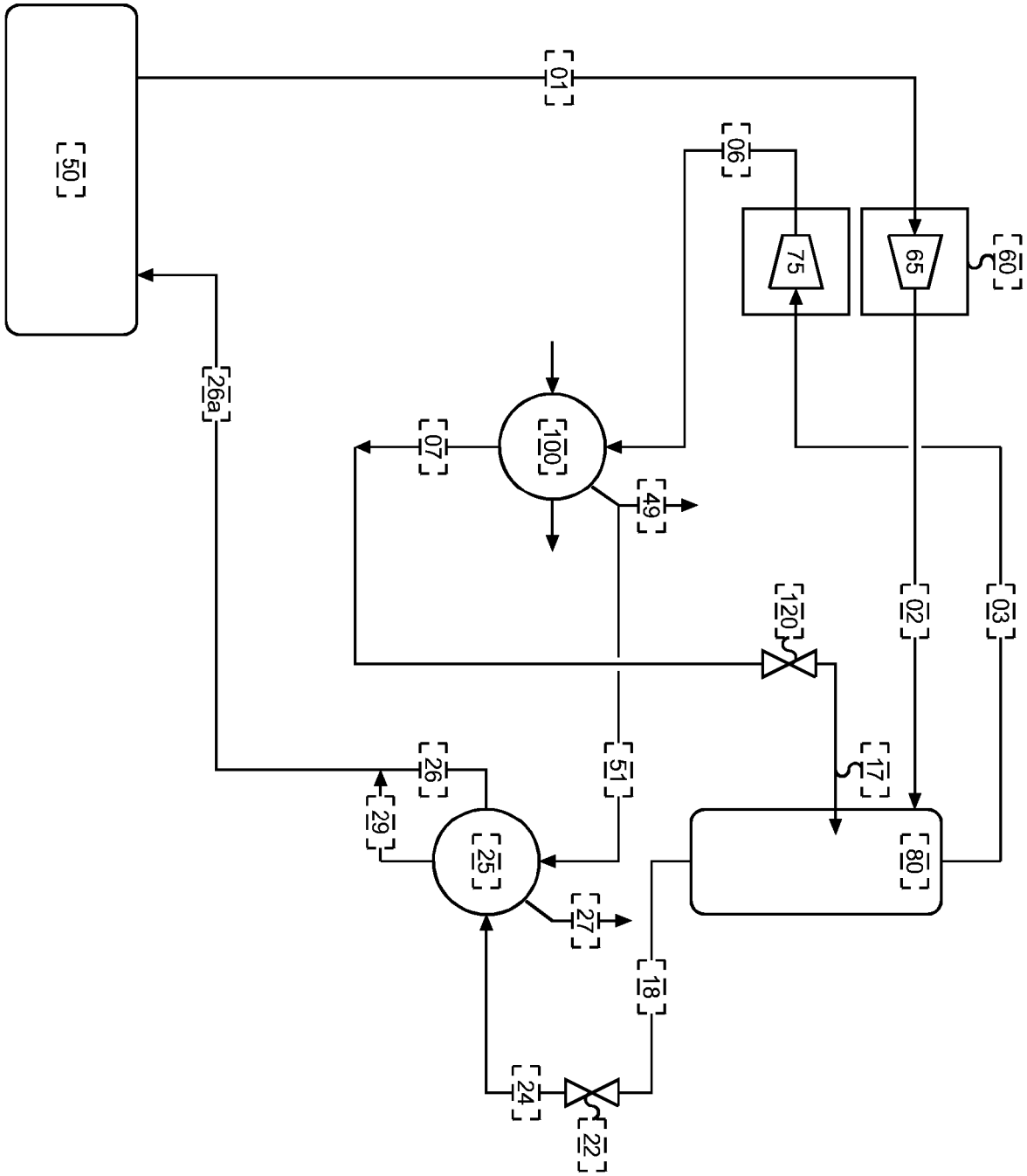

Figure 2

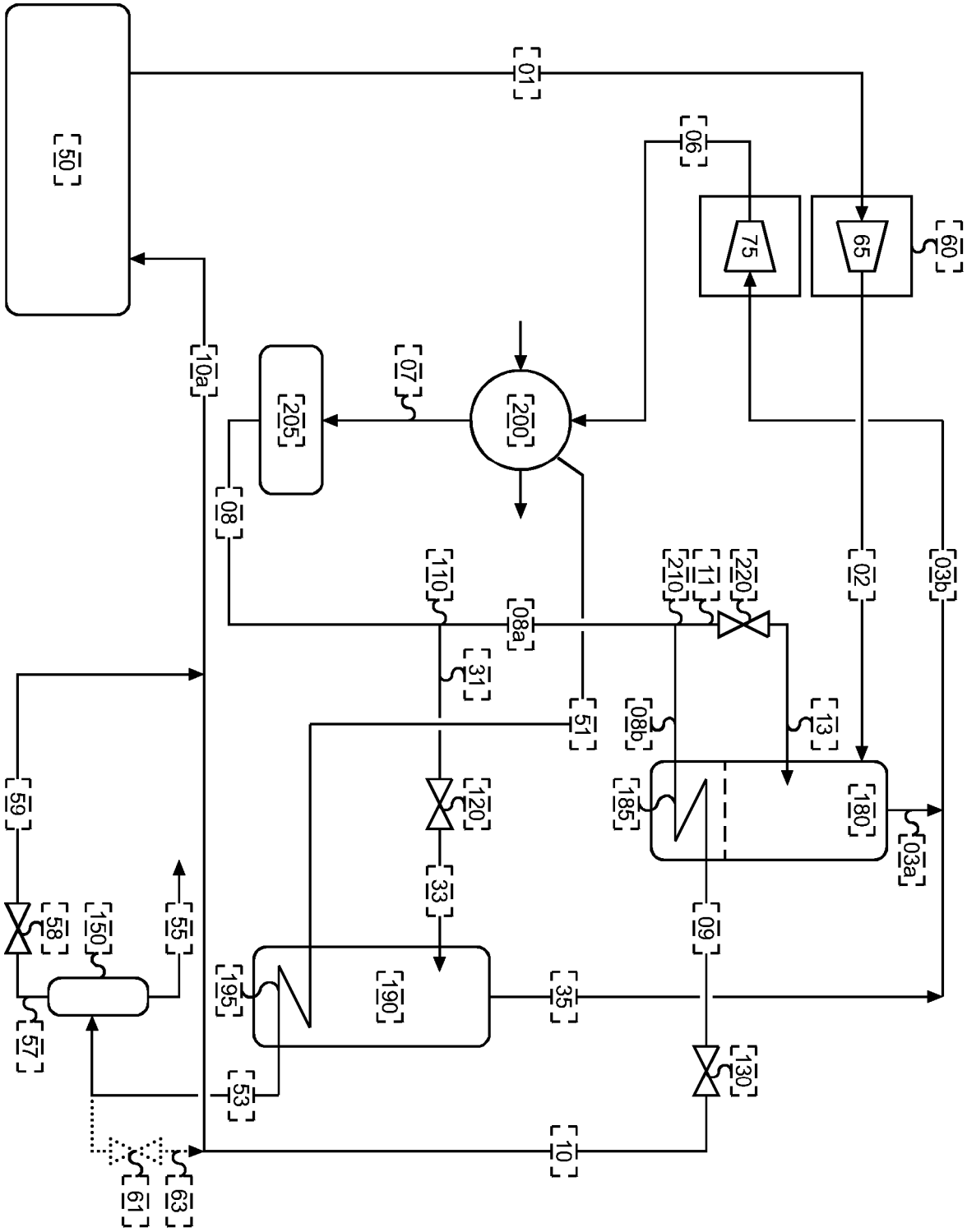
50
01
06
75
65
60
10a
205
07
200
08
110
08a
210
11
220
02
03b
31
51
08b
13
59
120
185
180
03a
58
150
55
33
09
195
190
35
57
53
130
10
61
63

Figure 3

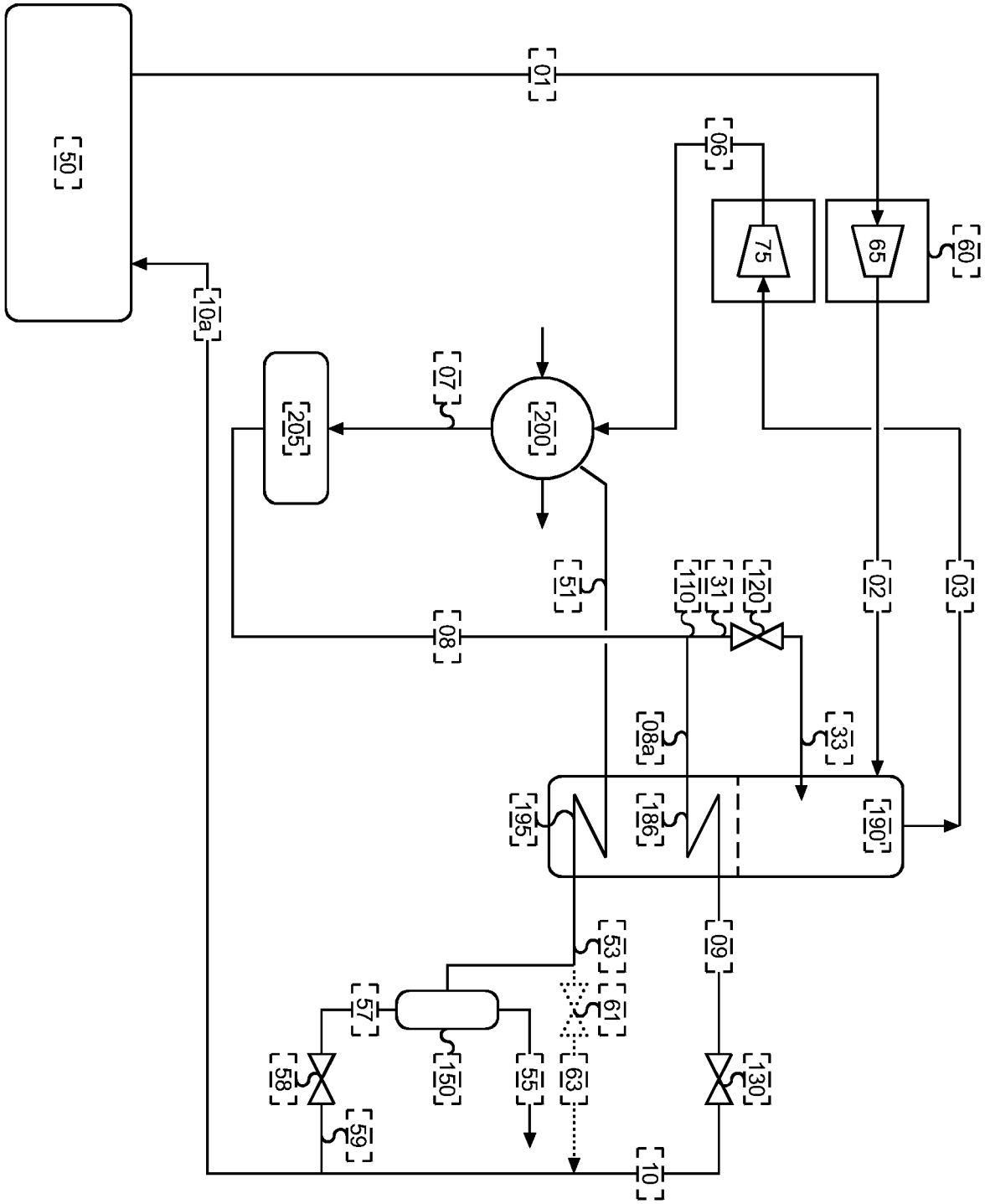
50
01
06
75
65
60
10a
07
205
200
51
110
31
120
02
03
08
08a
33
195
186
190
53
09
61
57
58
150
55
63
130
59
10

Figure 4

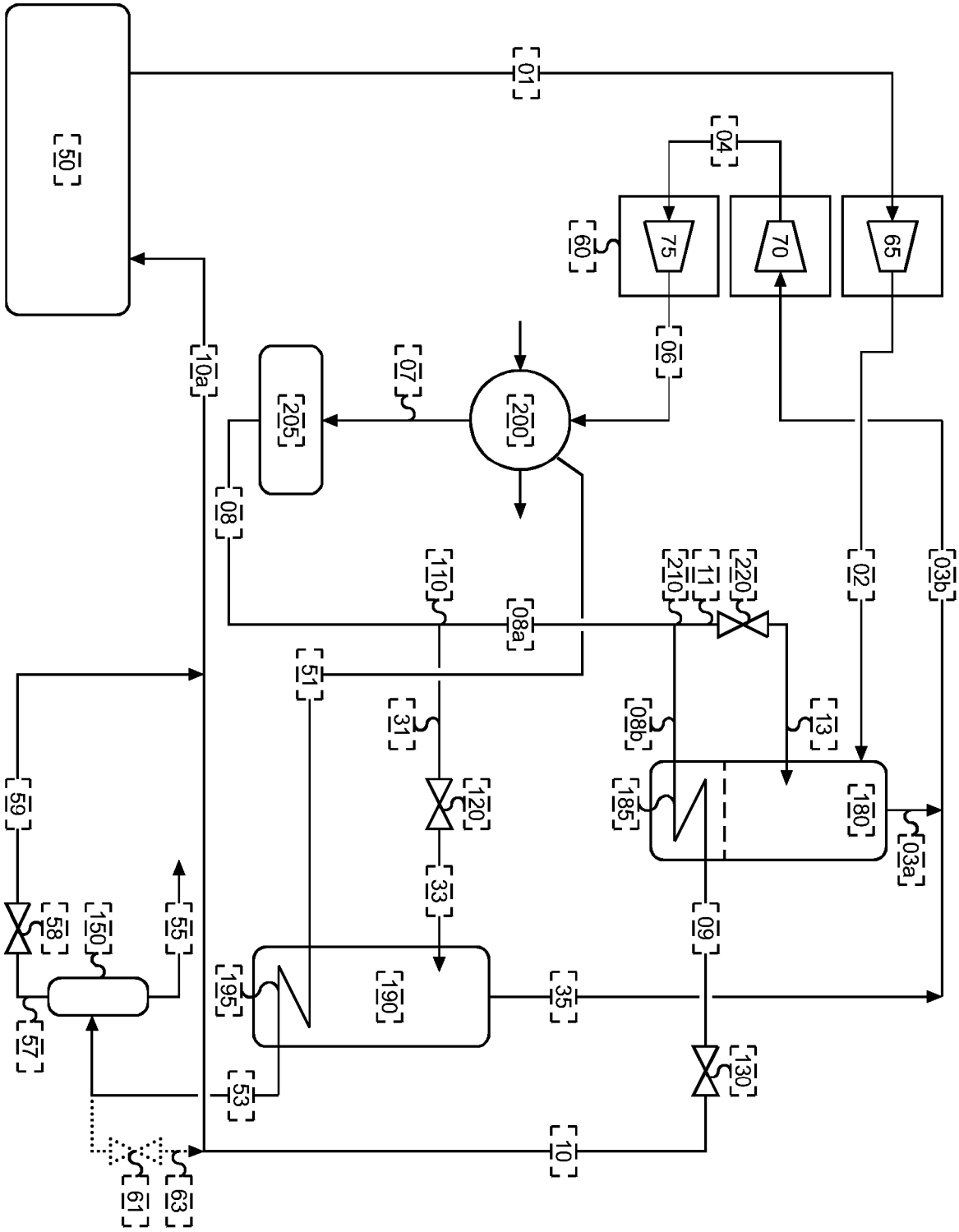
50
01
04
60
75
70
65
06
10a
205
07
200
08
110
08a
210
11
220
02
03b
51
31
08b
13
59
120
185
180
03a
58
150
55
33
09
195
190
35
57
53
130
10
61
63

Figure 5

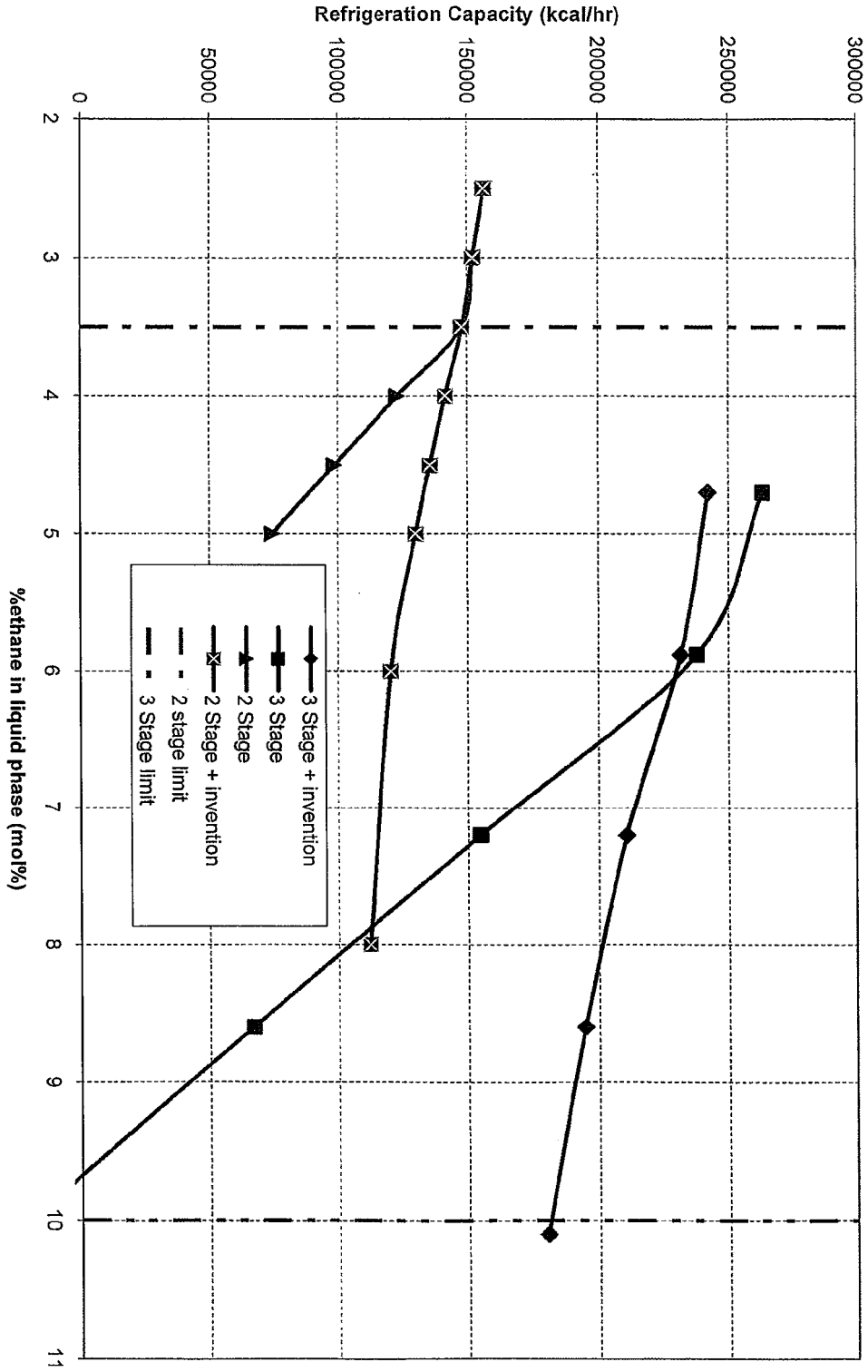
Refrigeration Capacity (kcal/hr)
0
50000
100000
150000
200000
250000
300000
%ethane in liquid phase (mol%)
2
3
4
5
6
7
8
9
10
11
3 Stage + invention
3 Stage
2 Stage
2 Stage + invention
2 stage limit
3 Stage limit

Figure 6

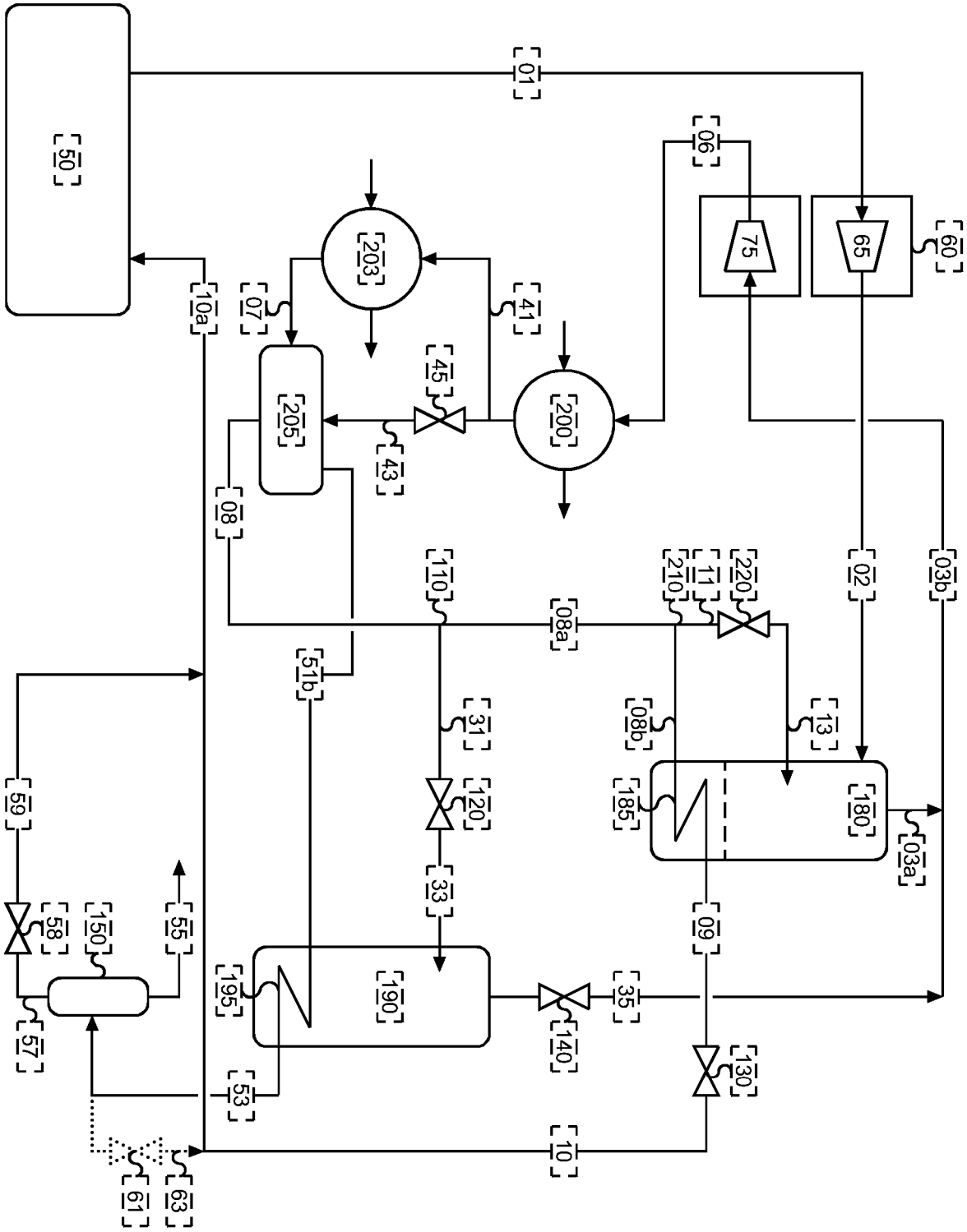
50
01
06
75
65
60
203
07
41
10a
45
205
200
43
08
110
210
11
220
02
03b
08a
51b
31
08b
13
59
120
185
180
03a
33
09
58
150
55
195
190
35
140
130
57
53
10
61
63