FIG. 1

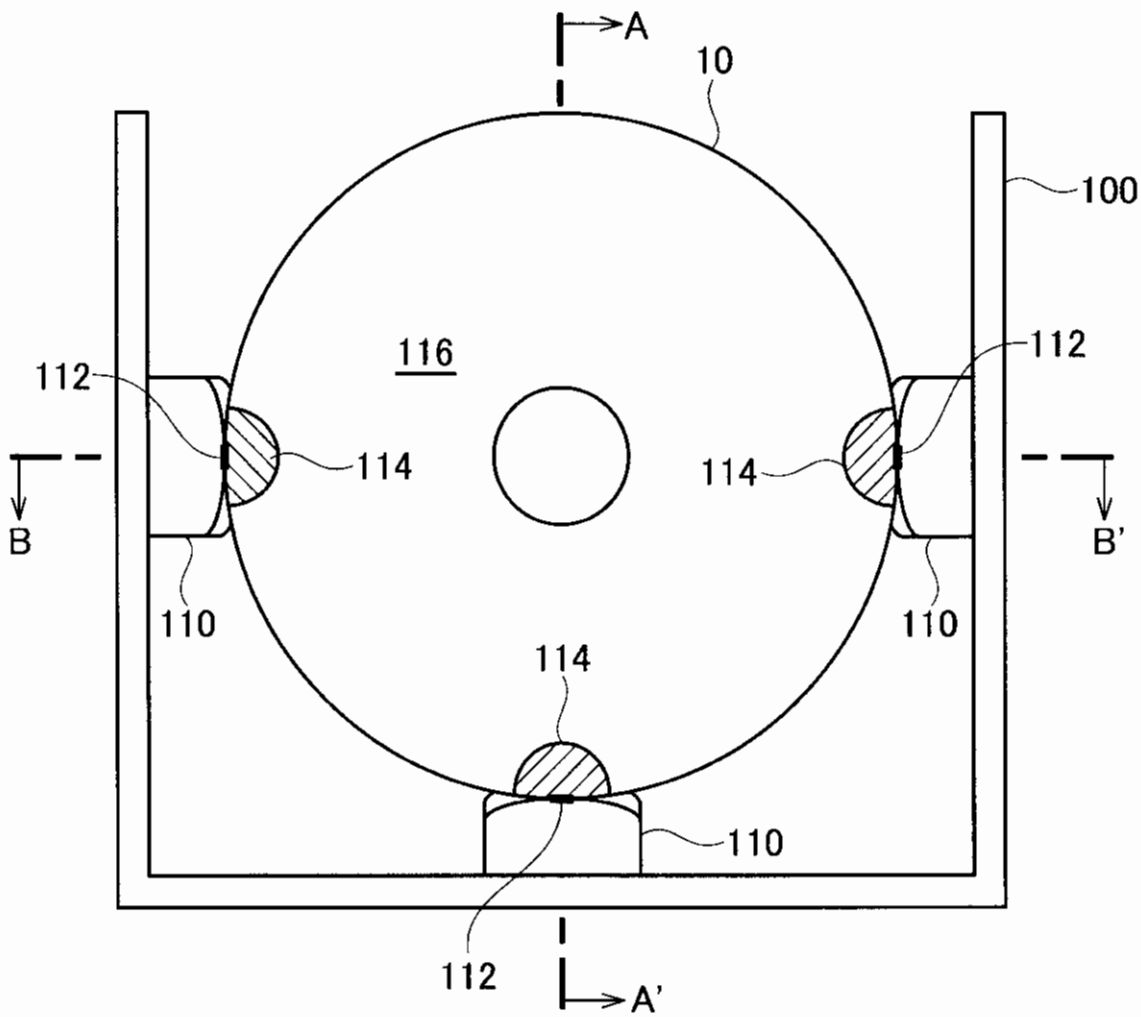

FIG. 2

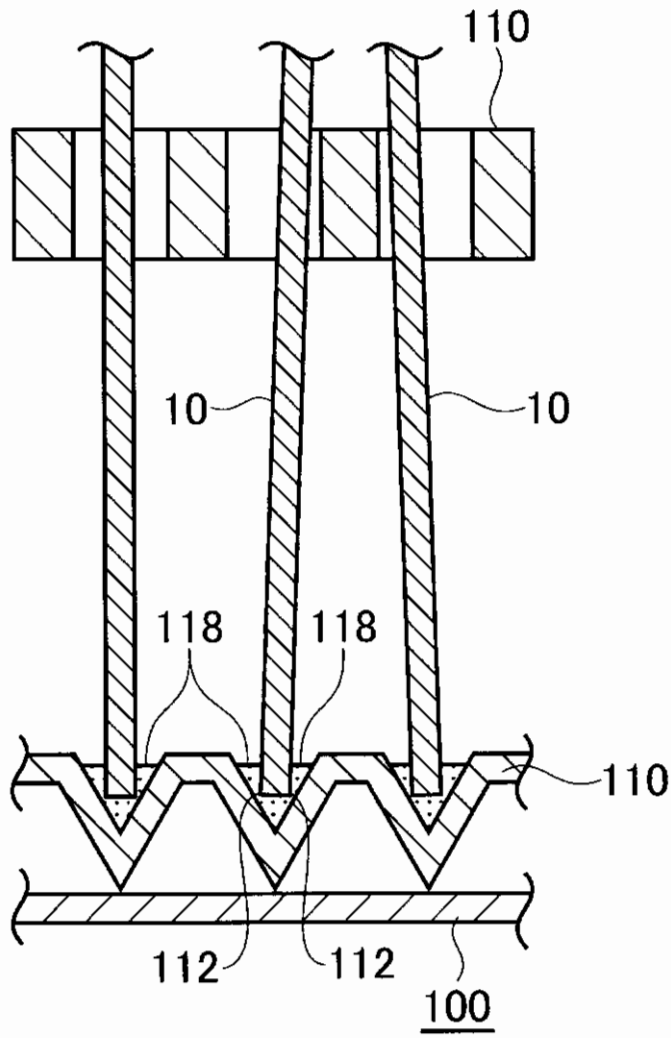

FIG. 3

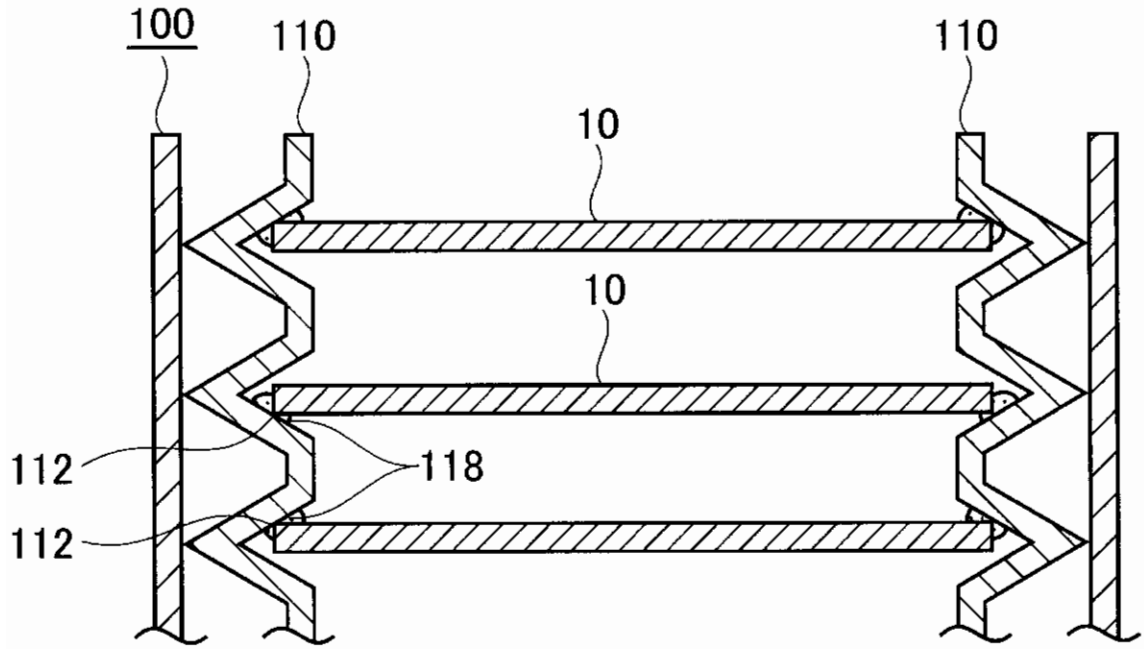

FIG. 4

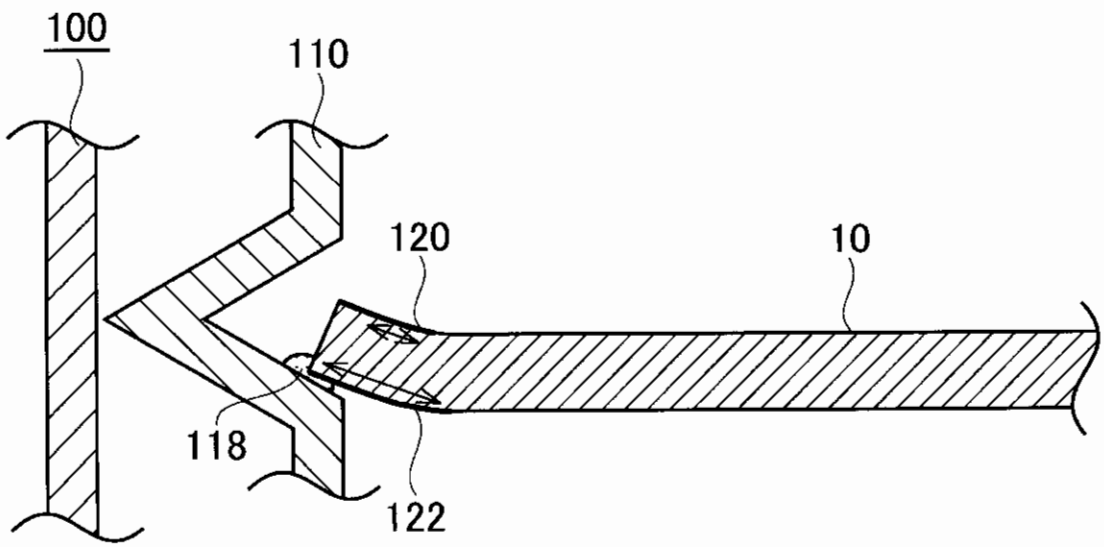

FIG. 5

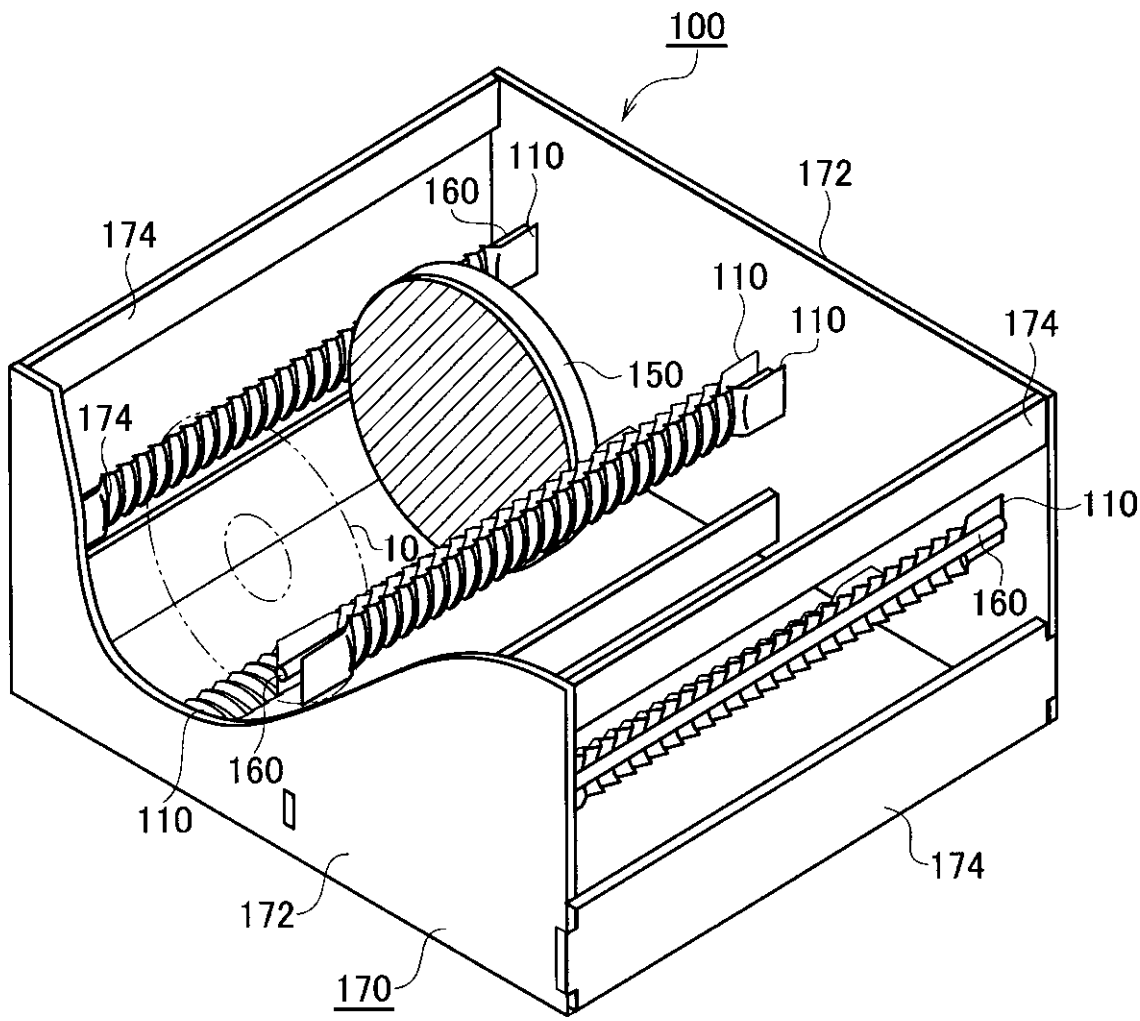
100
110
160
172
174
110
110
174
150
174
110
10
160
160
110
174
172
170

FIG. 6

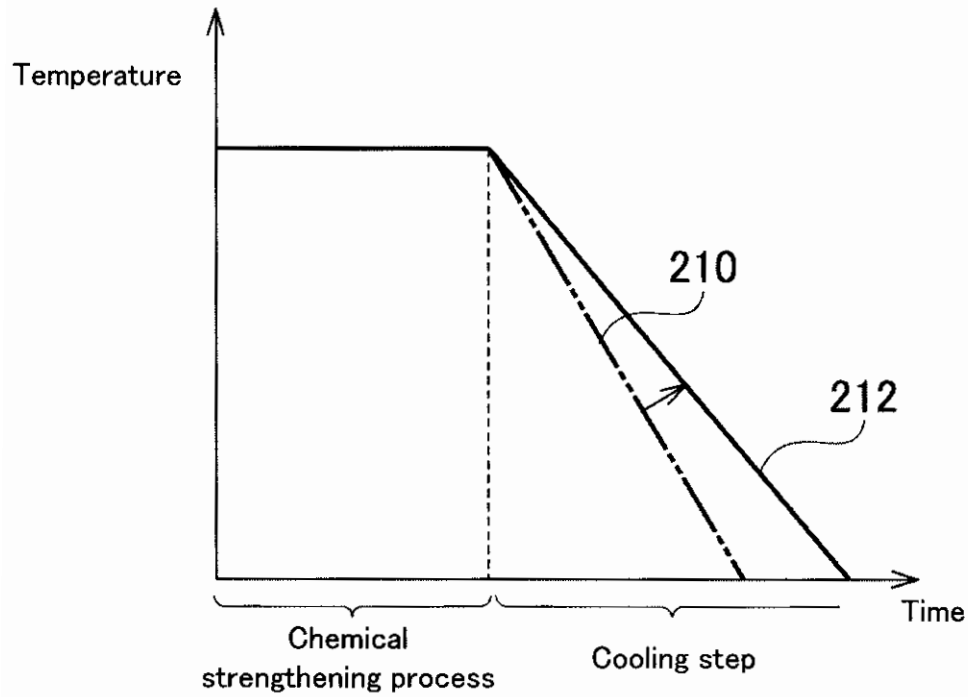
Temperature
210
212
Time
Chemical
strengthening process
Cooling step

FIG. 7

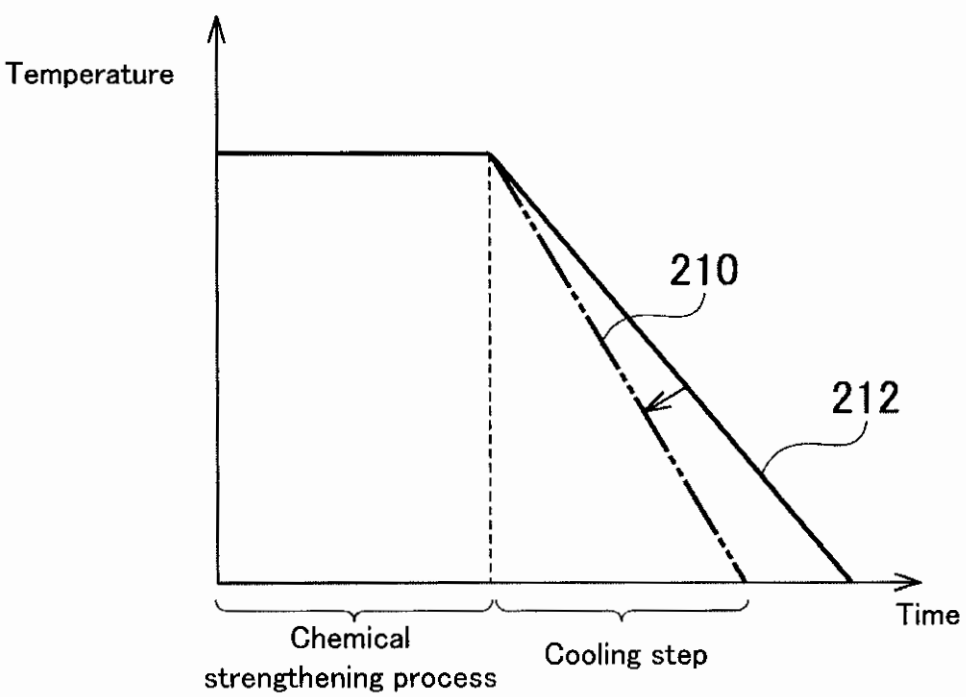
Temperature
210
212
Time
Chemical
strengthening process
Cooling step

FIG. 8

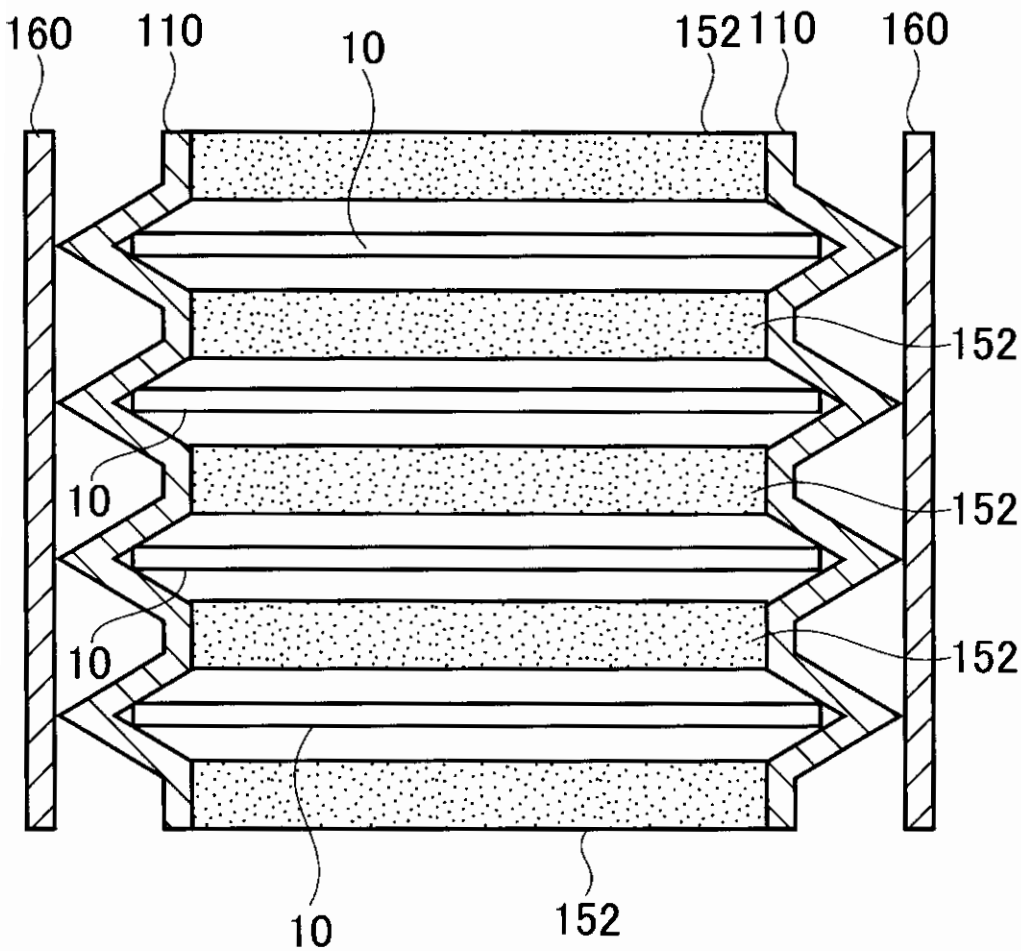

FIG. 9

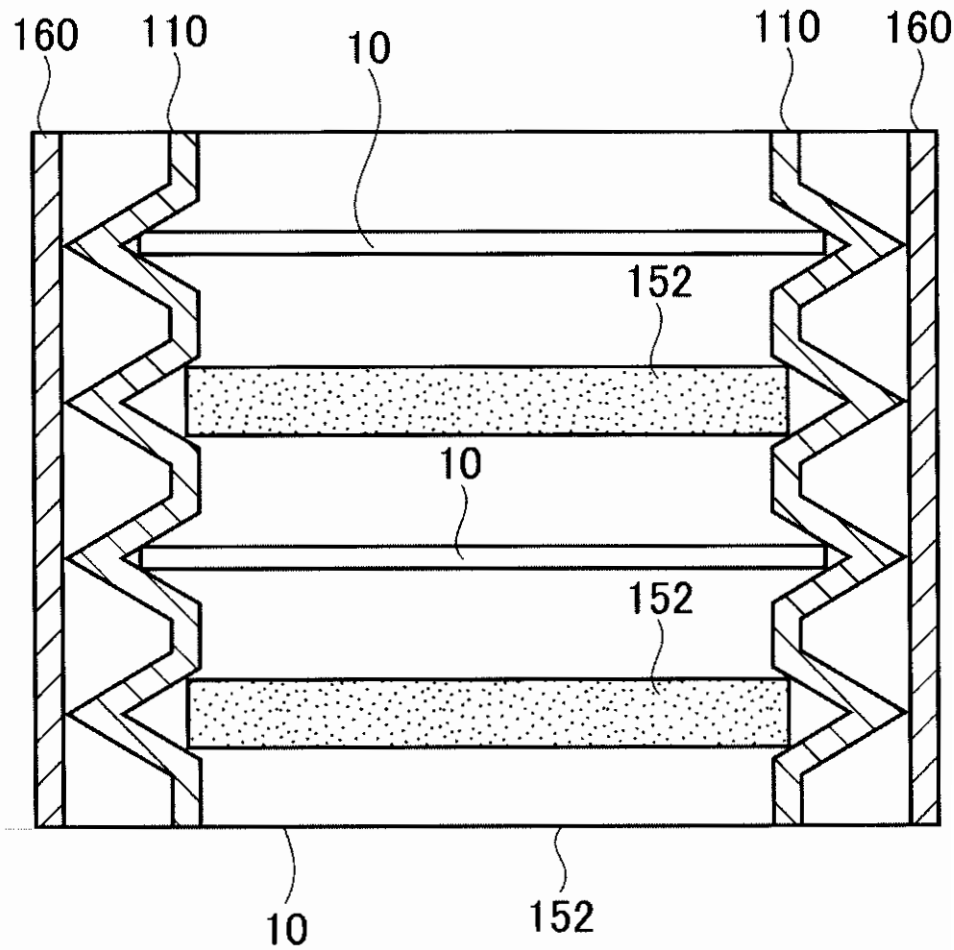

FIG. 10

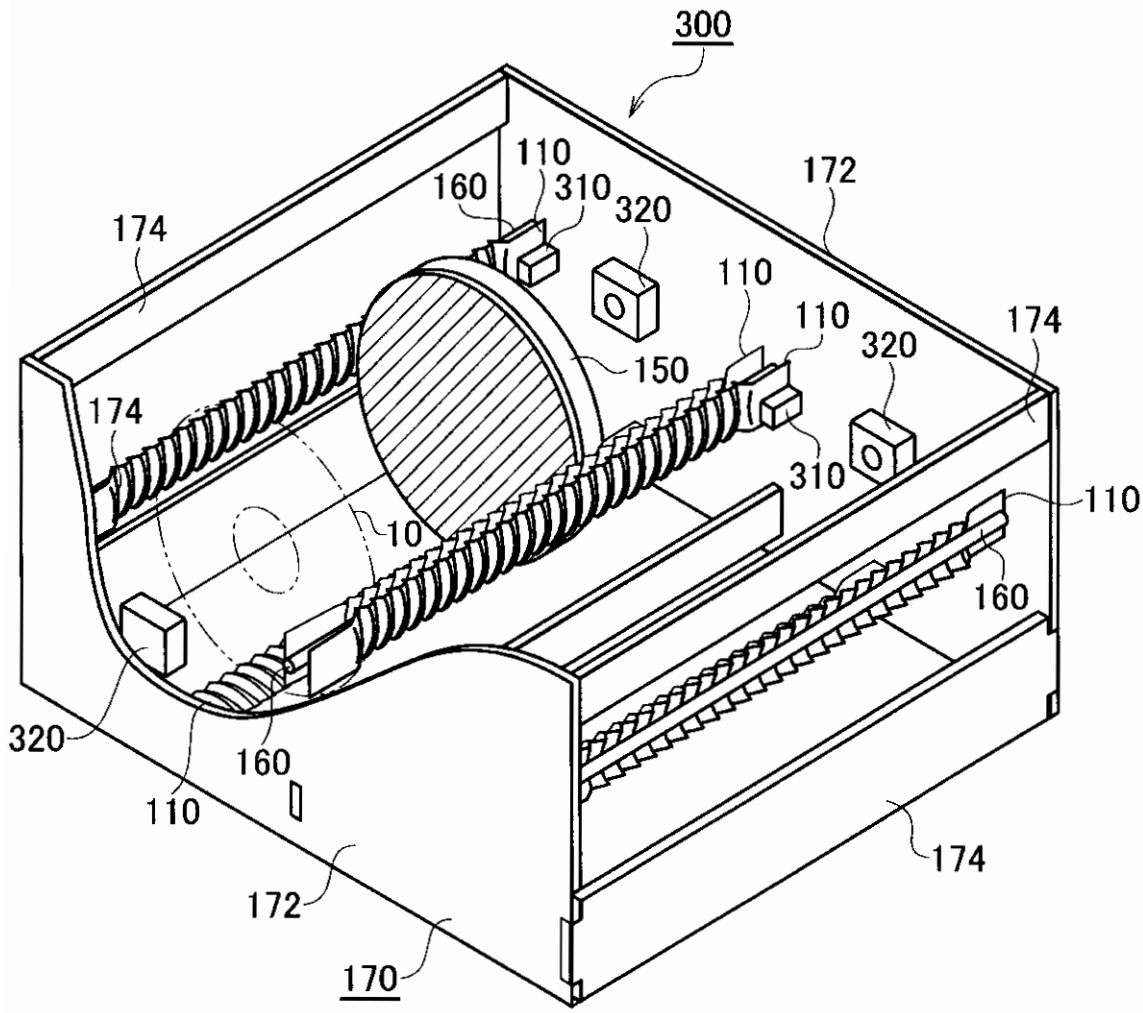
300
110
160
310
320
172
174
110
110
320
174
150
174
310
110
10
160
320
160
110
174
172
170

FIG. 11

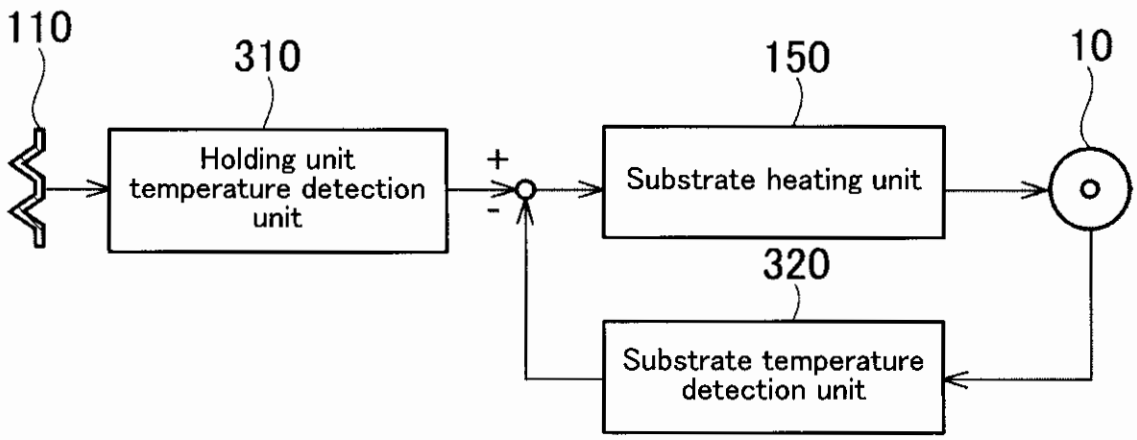
110
310
150
10
Holding unit temperature detection unit
+
-
Substrate heating unit
320
Substrate temperature detection unit

FIG. 12

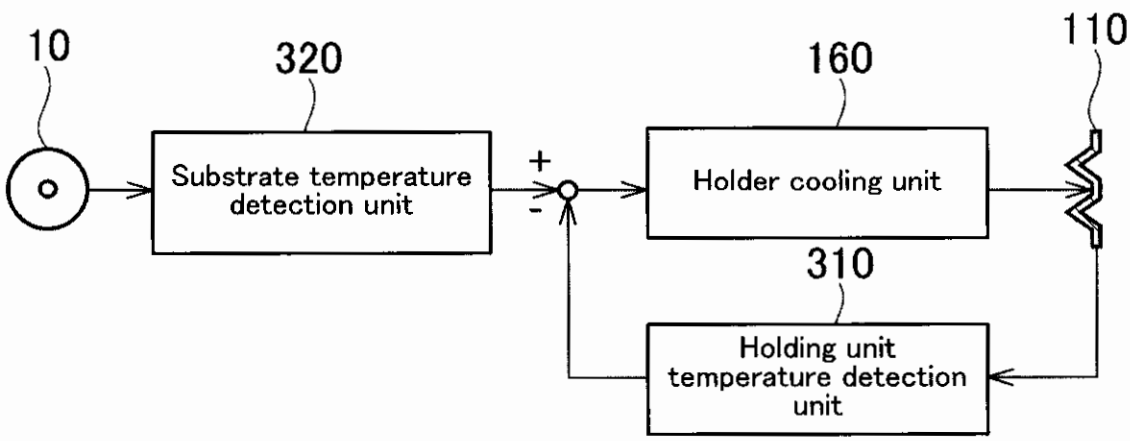
10
320
160
110
Substrate temperature detection unit
+
-
Holder cooling unit
310
Holding unit temperature detection unit

FIG. 13

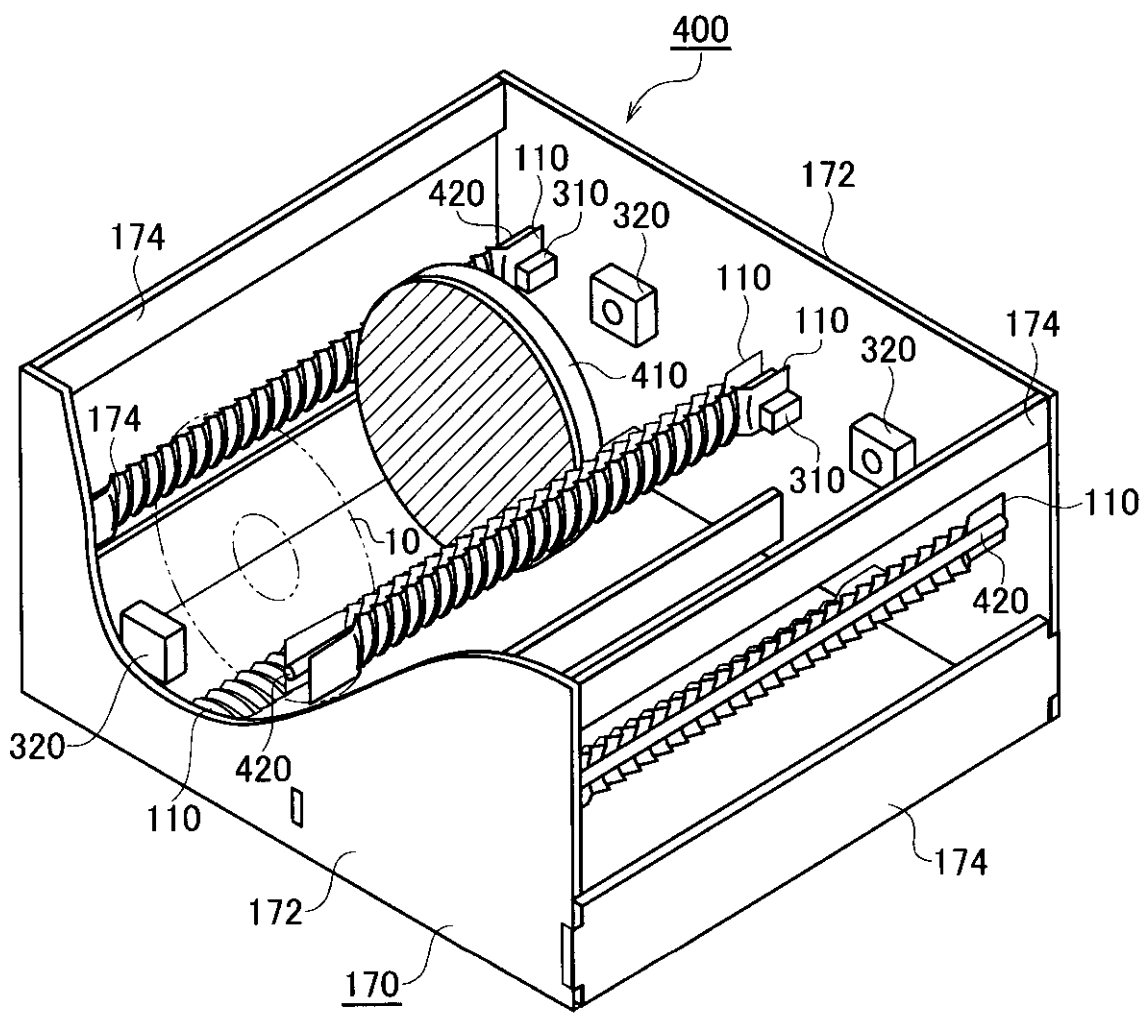
400
110
420
310
320
172
174
110
110
174
320
410
174
310
110
10
420
320
420
110
174
172
170

FIG. 14

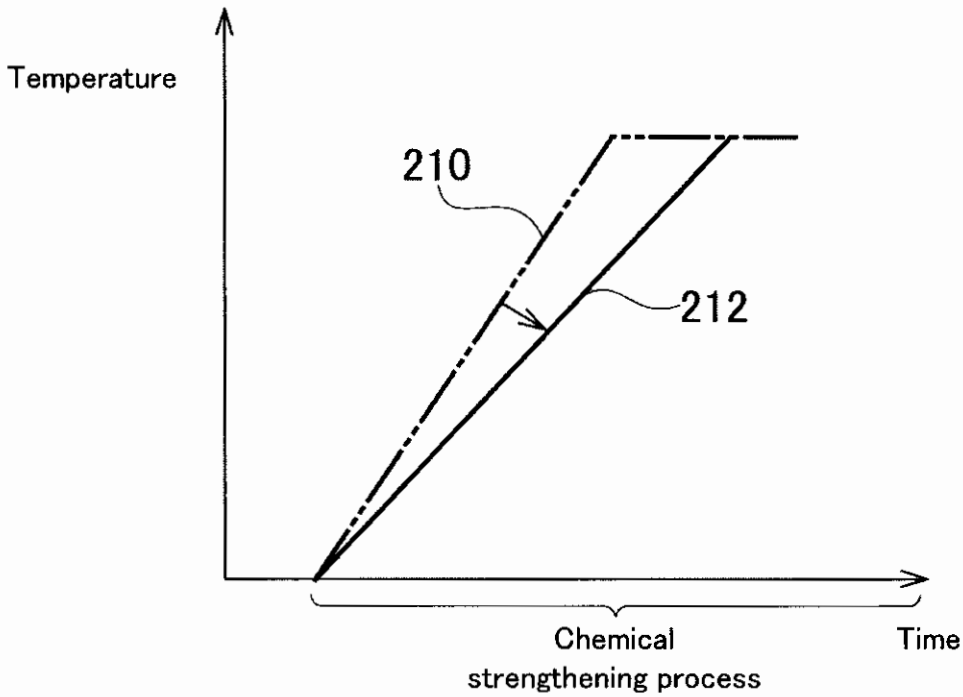
Temperature
210
212
Chemical
strengthening process
Time

FIG. 15

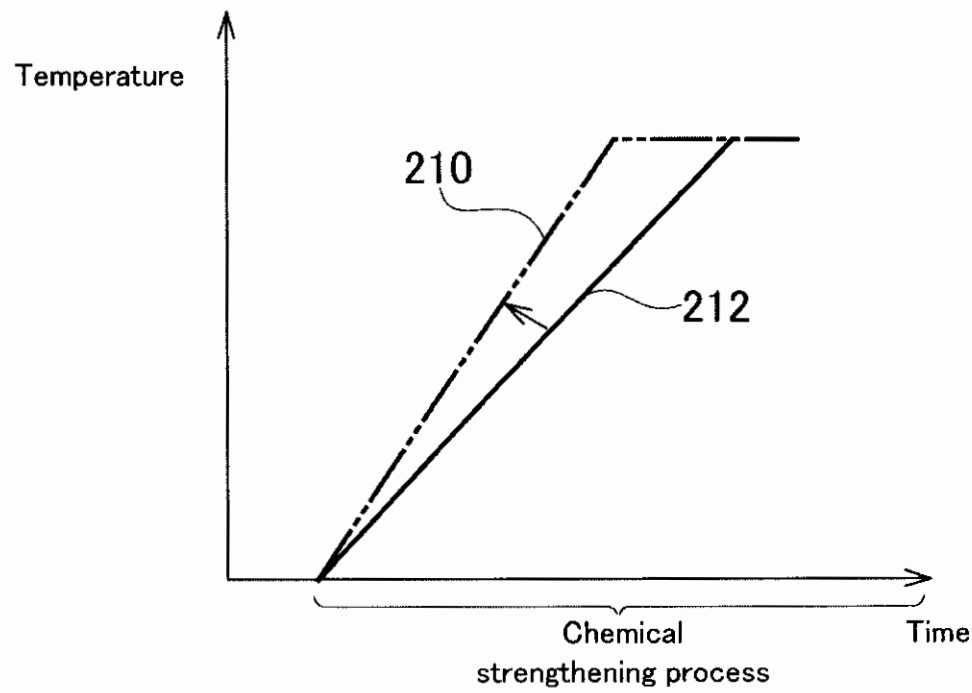
Temperature
210
212
Chemical
strengthening process
Time

FIG. 16

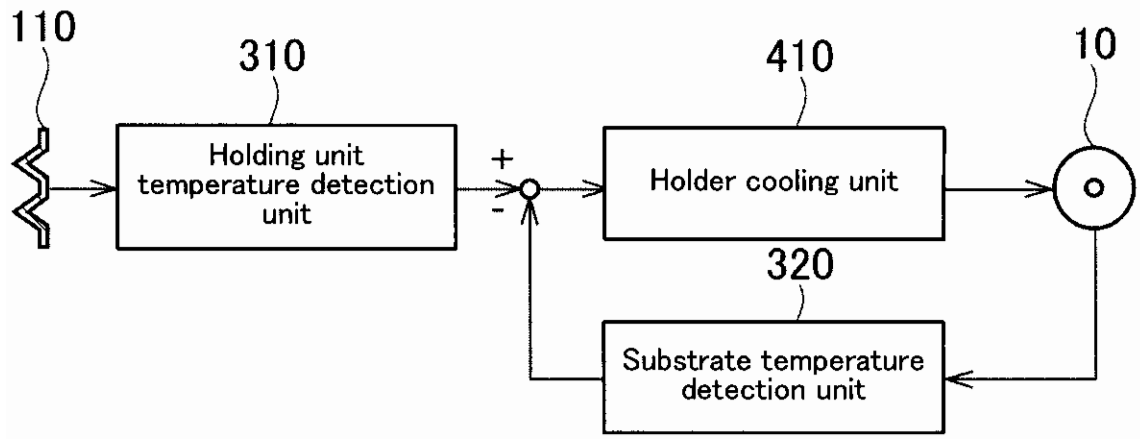
110
310
410
10
Holding unit temperature detection unit
+
-
Holder cooling unit
320
Substrate temperature detection unit

FIG. 17

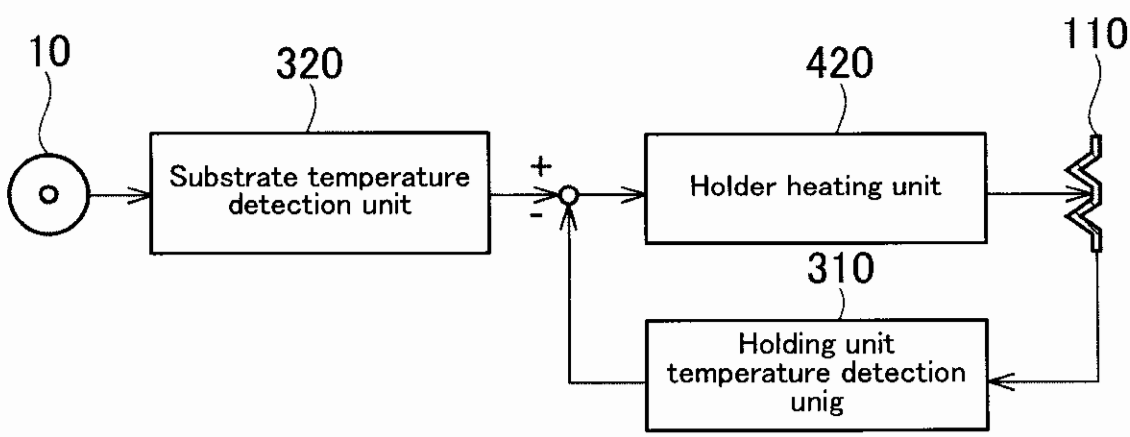
10
320
420
110
Substrate temperature detection unit
+
-
Holder heating unit
310
Holding unit temperature detection unig