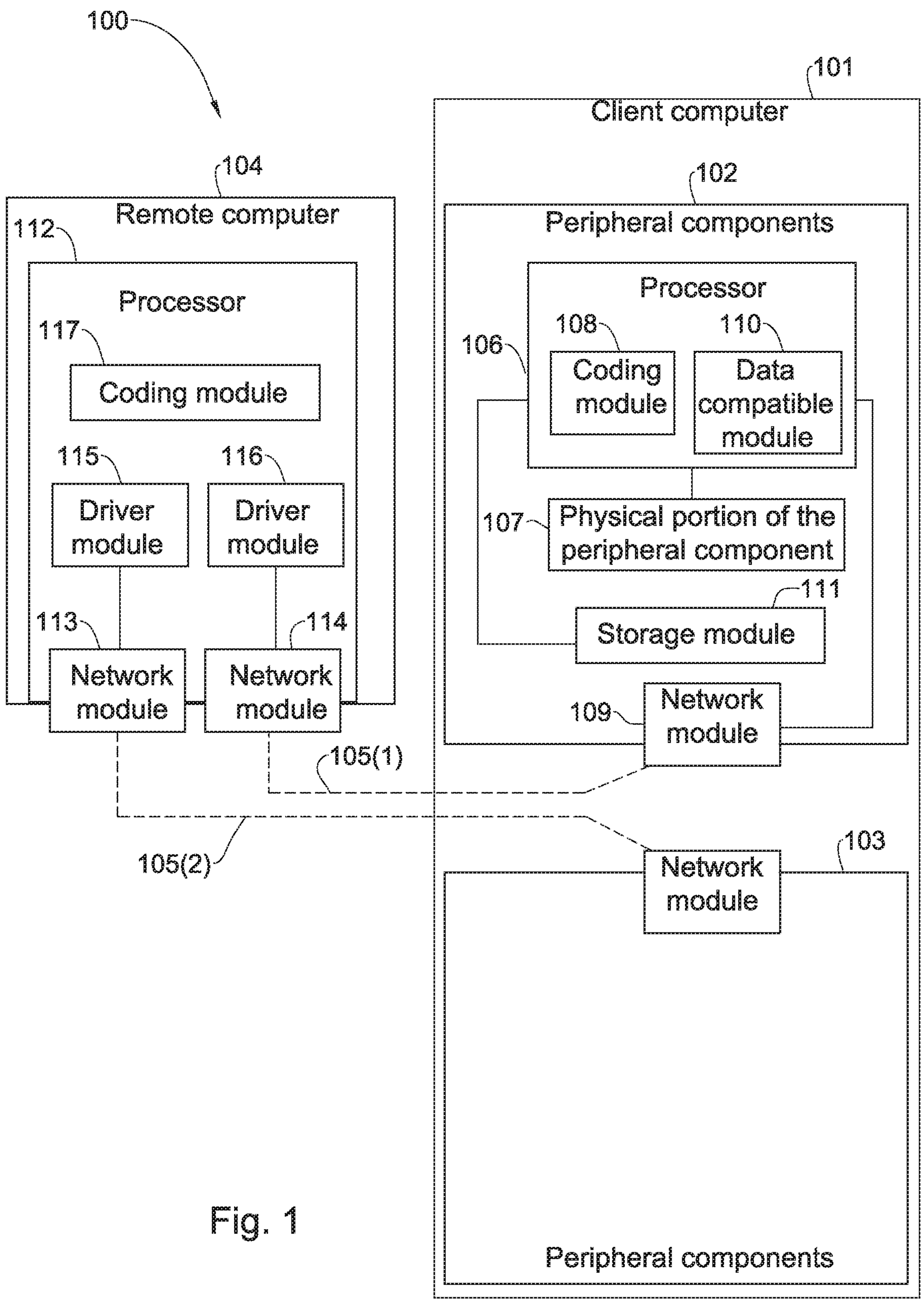
100
101
Client computer
104
Remote computer
112
Processor
117
Coding module
115
Driver module
116
Driver module
113
114
Network module
Network module
105(1)
105(2)
102
Peripheral components
Processor
108
110
106
Coding module
Data compatible module
107
Physical portion of the peripheral component
111
Storage module
109
Network module
Network module
103
Peripheral components

Fig. 1

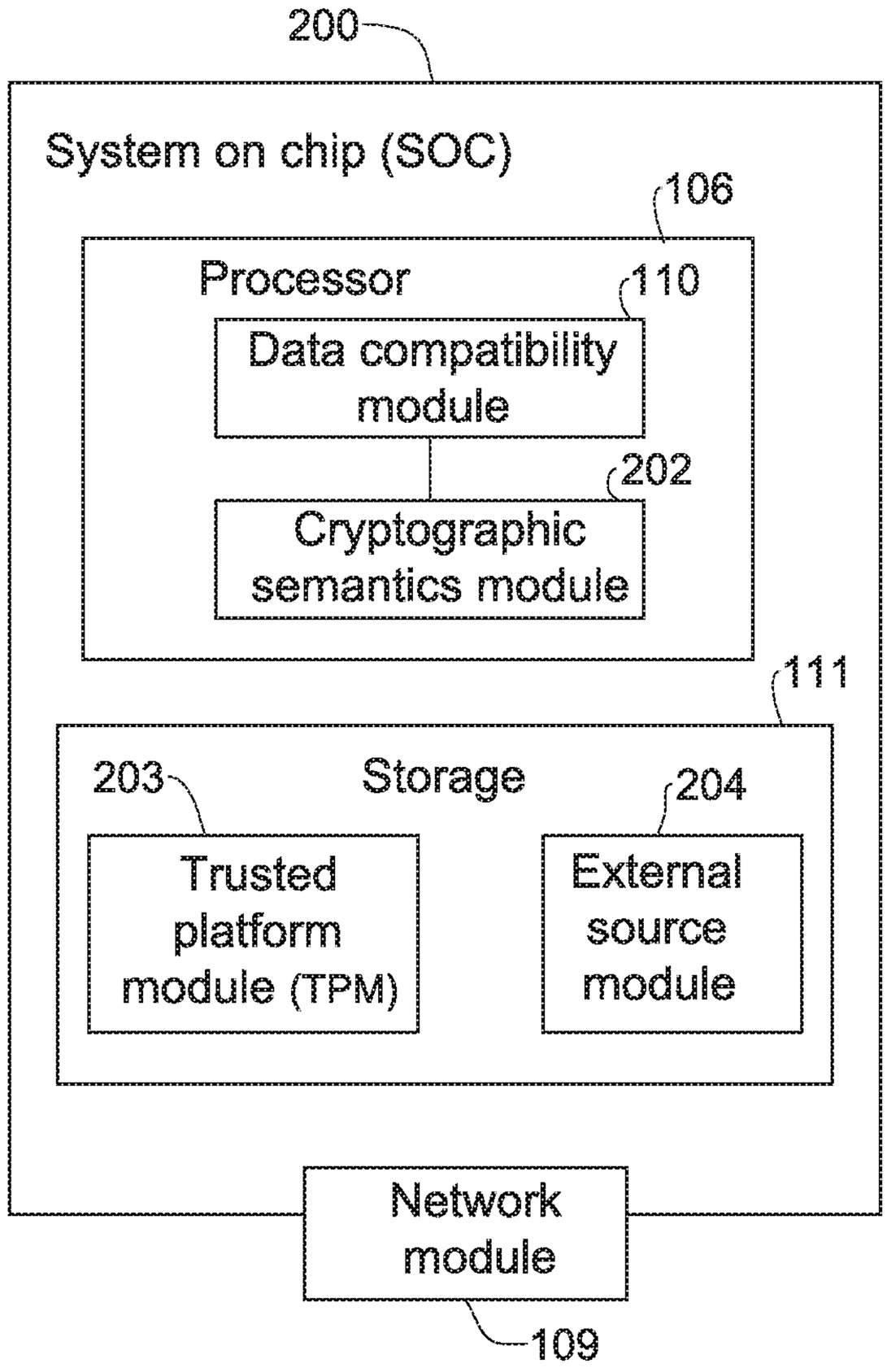
200
System on chip (SOC)
106
Processor
110
Data compatibility module
202
Cryptographic semantics module
111
Storage
203
Trusted platform module (TPM)
204
External source module
Network module
109

Fig.2

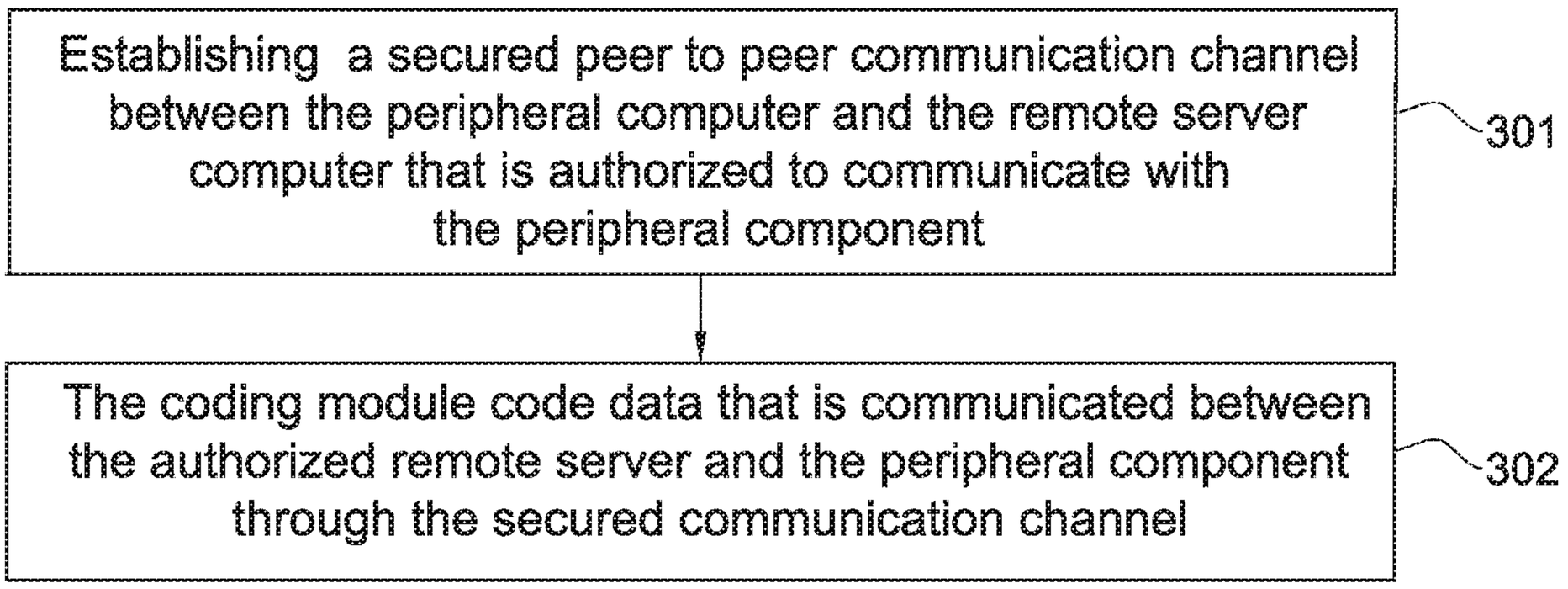
Establishing a secured peer to peer communication channel between the peripheral computer and the remote server computer that is authorized to communicate with the peripheral component
301
The coding module code data that is communicated between the authorized remote server and the peripheral component through the secured communication channel
302

Fig. 3

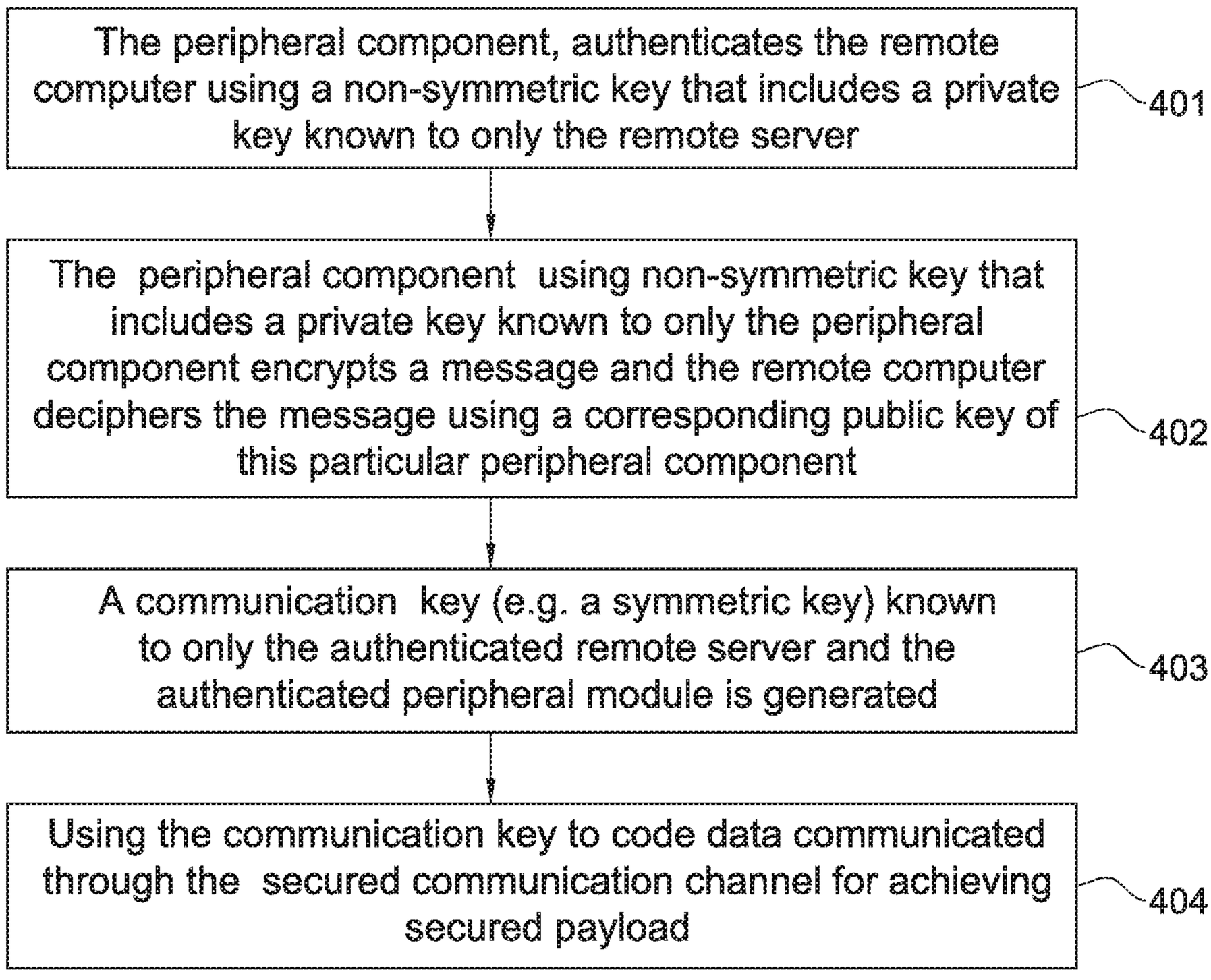
The peripheral component, authenticates the remote computer using a non-symmetric key that includes a private key known to only the remote server
401
The peripheral component using non-symmetric key that includes a private key known to only the peripheral component encrypts a message and the remote computer deciphers the message using a corresponding public key of this particular peripheral component
402
A communication key (e.g. a symmetric key) known to only the authenticated remote server and the authenticated peripheral module is generated
403
Using the communication key to code data communicated through the secured communication channel for achieving secured payload
404

Fig. 4

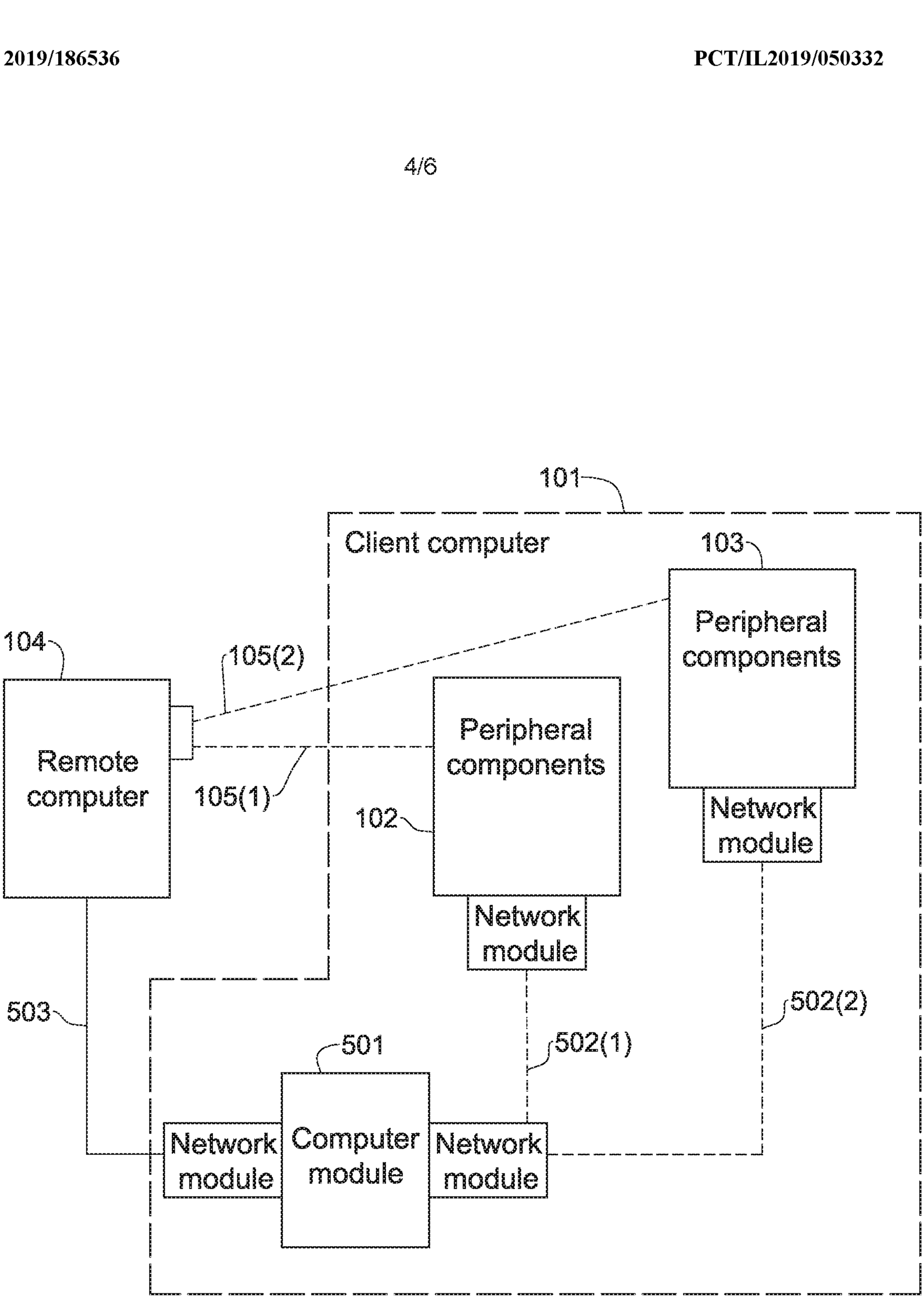
101
Client computer
103
Peripheral components
104
105(2)
Remote computer
105(1)
Peripheral components
102
Network module
Network module
503
502(2)
501
502(1)
Network module
Computer module
Network module

Fig. 5

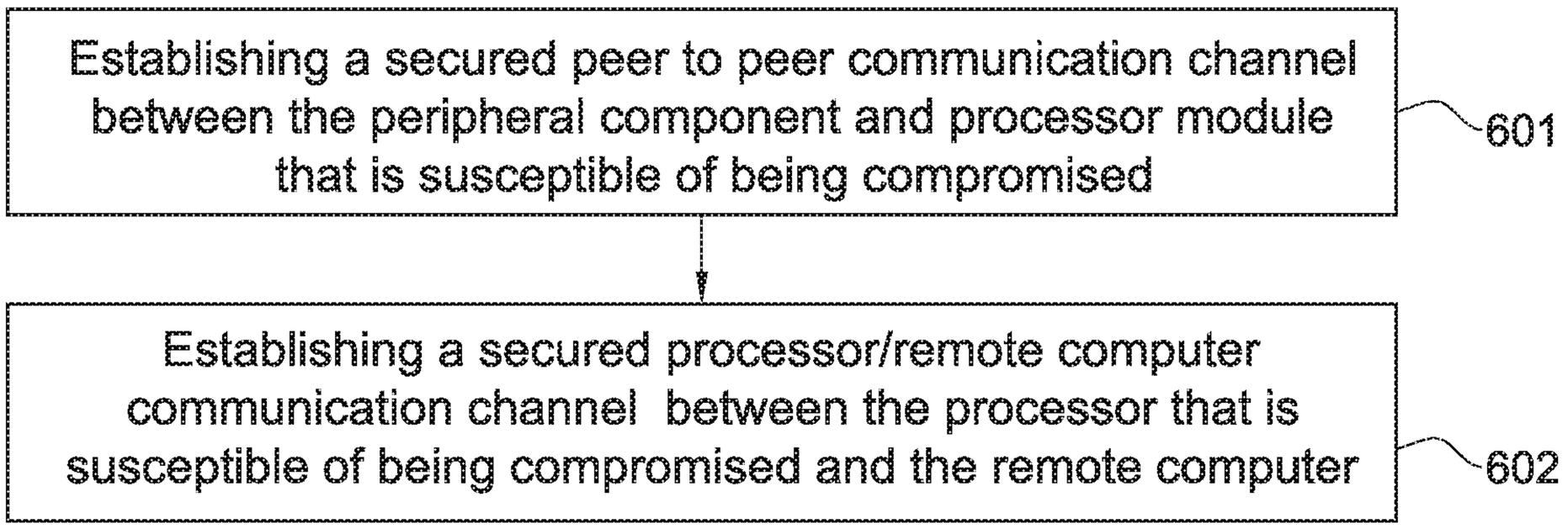

Fig. 6

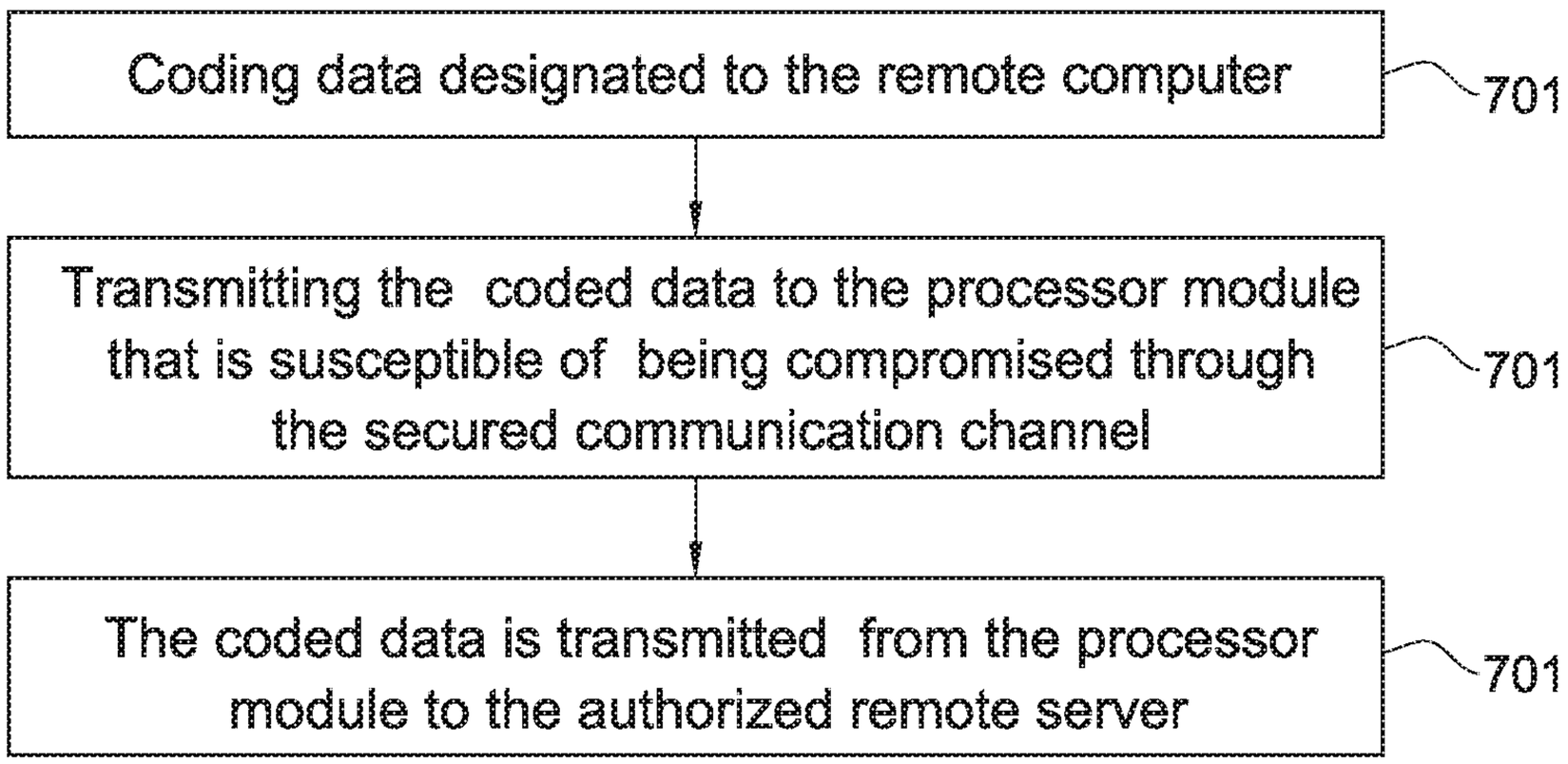

Fig. 7

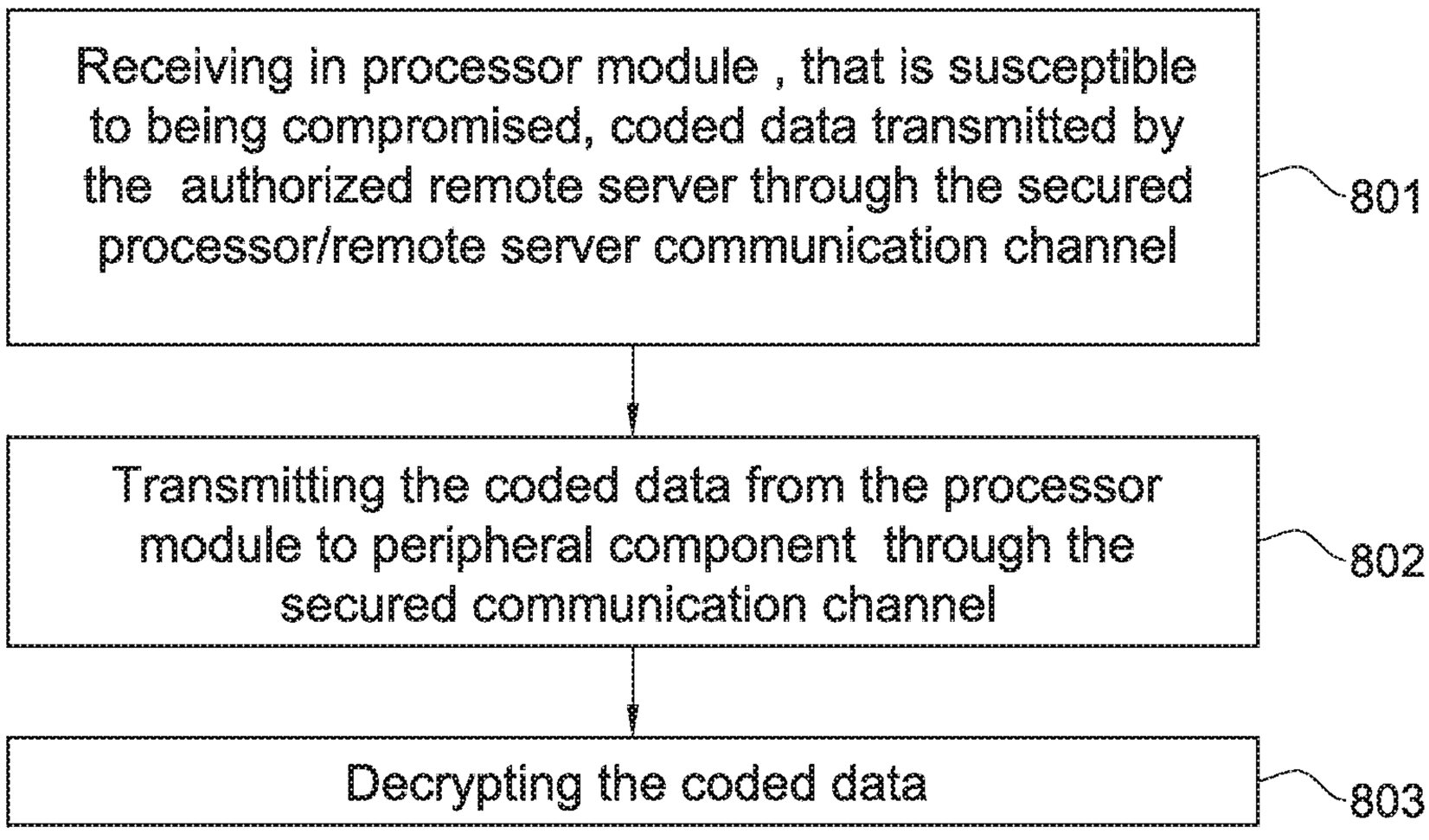

Fig. 8

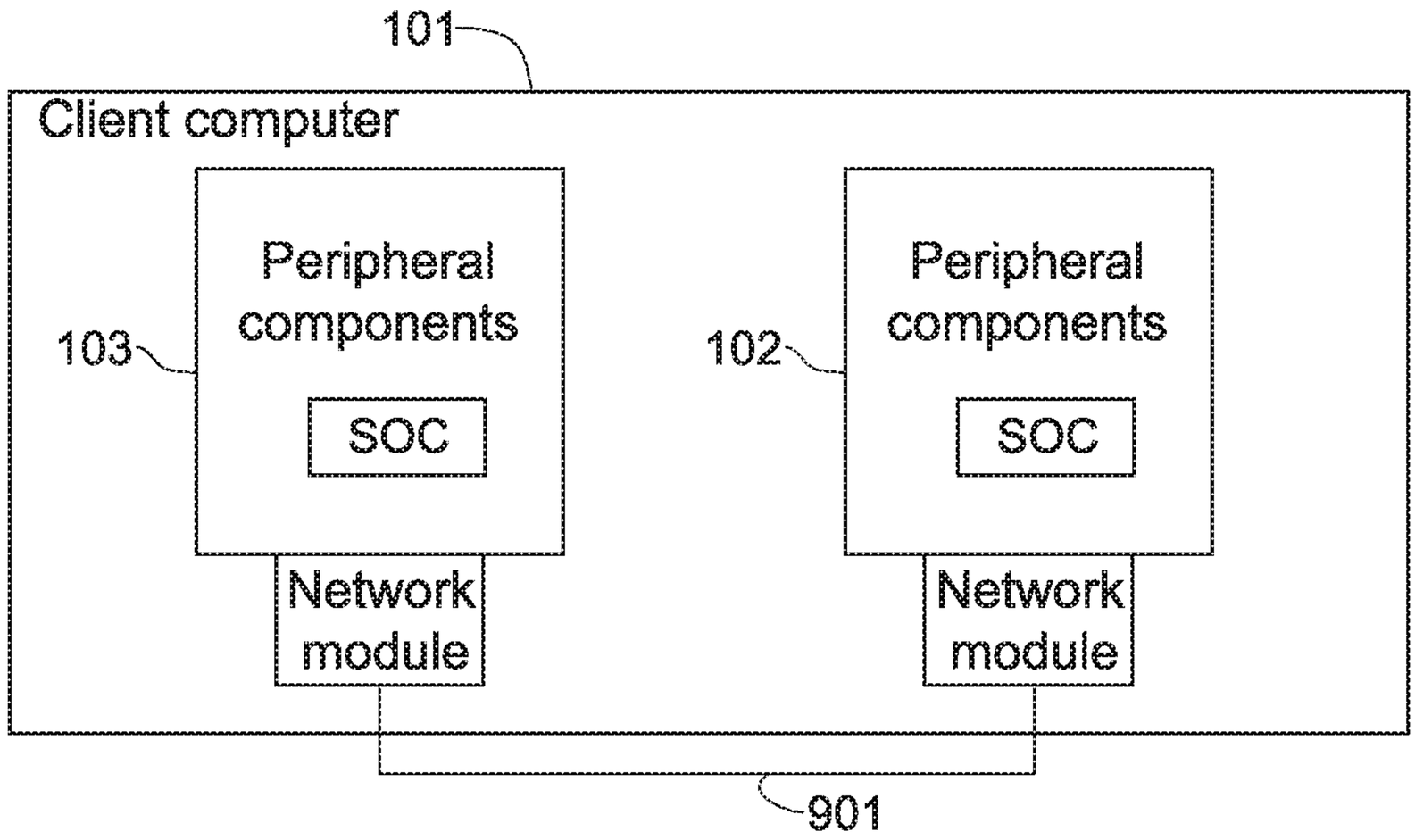

Fig. 9

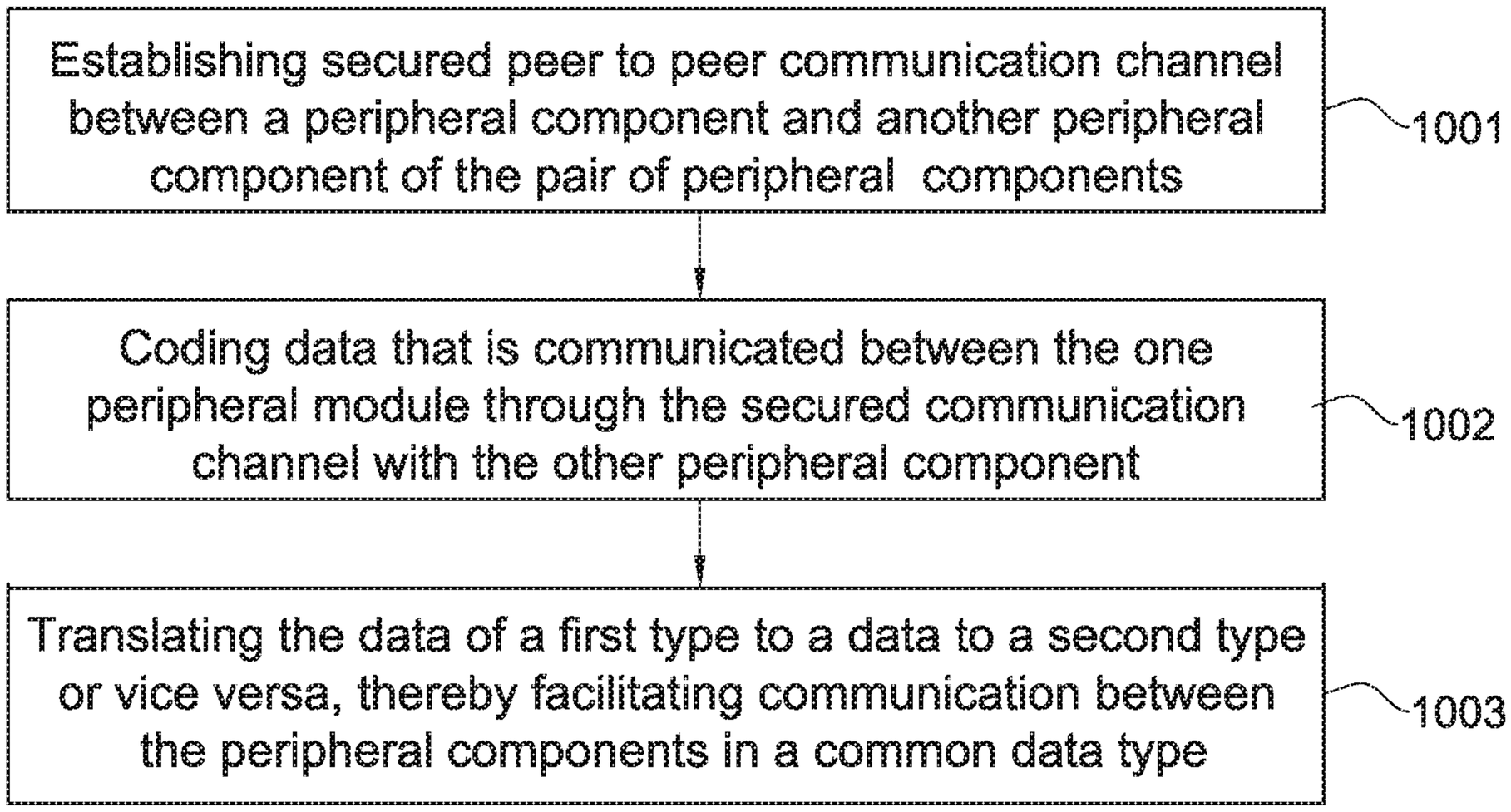

Fig. 10

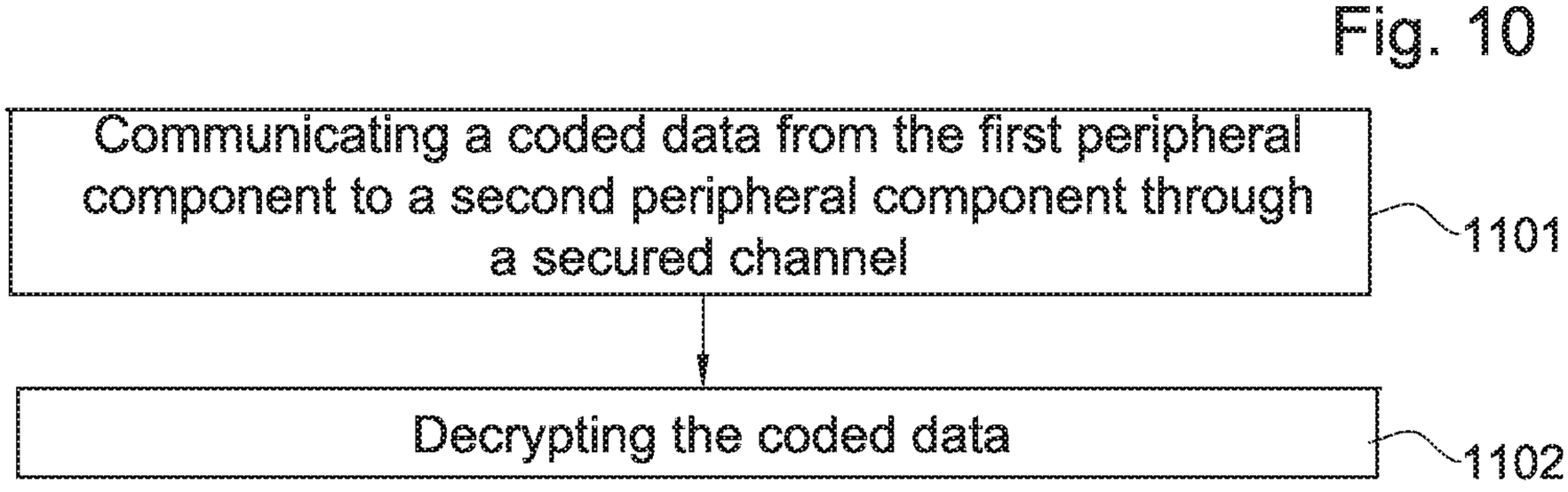

Fig. 11