(12) INTERNATIONAL APPLICATION PUBLISHED UNDER THE PATENT COOPERATION TREATY (PCT)

(19) World Intellectual Property Organization
International Bureau

(43) International Publication Date
5 June 2003 (05.06.2003)

PCT

(10) International Publication Number
WO 03/045778 A1

(51) International Patent Classification[7]: B64C 21/04, B63B 1/32, F15D 1/12

(21) International Application Number: PCT/NO02/00457

(22) International Filing Date:
29 November 2002 (29.11.2002)

(25) Filing Language: English

(26) Publication Language: English

(30) Priority Data:
20015844 30 November 2001 (30.11.2001) NO

(71) Applicant and
(72) Inventor: **KRISTIANSEN, Arne** [NO/NO]; Einerveien 61, N-1405 Langhus (NO).

(74) Agents: **ONSAGERS AS** et al.; P.O. Box 6963 St. Olavs plass, N-0130 Oslo (NO).

(81) Designated States *(national)*: AE, AG, AL, AM, AT, AU, AZ, BA, BB, BG, BR, BY, BZ, CA, CH, CN, CO, CR, CU, CZ, DE, DK, DM, DZ, EC, EE, ES, FI, GB, GD, GE, GH, GM, HR, HU, ID, IL, IN, IS, JP, KE, KG, KP, KR, KZ, LC, LK, LR, LS, LT, LU, LV, MA, MD, MG, MK, MN, MW, MX, MZ, NO, NZ, OM, PH, PL, PT, RO, RU, SC, SD, SE, SG, SI, SK, SL, TJ, TM, TN, TR, TT, TZ, UA, UG, US, UZ, VC, VN, YU, ZA, ZM, ZW.

(84) Designated States *(regional)*: ARIPO patent (GH, GM, KE, LS, MW, MZ, SD, SL, SZ, TZ, UG, ZM, ZW), Eurasian patent (AM, AZ, BY, KG, KZ, MD, RU, TJ, TM), European patent (AT, BE, BG, CH, CY, CZ, DE, DK, EE, ES, FI, FR, GB, GR, IE, IT, LU, MC, NL, PT, SE, SK, TR), OAPI patent (BF, BJ, CF, CG, CI, CM, GA, GN, GQ, GW, ML, MR, NE, SN, TD, TG).

Published:
— *with international search report*

For two-letter codes and other abbreviations, refer to the "Guidance Notes on Codes and Abbreviations" appearing at the beginning of each regular issue of the PCT Gazette.

(54) **Title:** METHOD AND SYSTEM FOR PRODUCING A POTENTIAL OVER A BODY

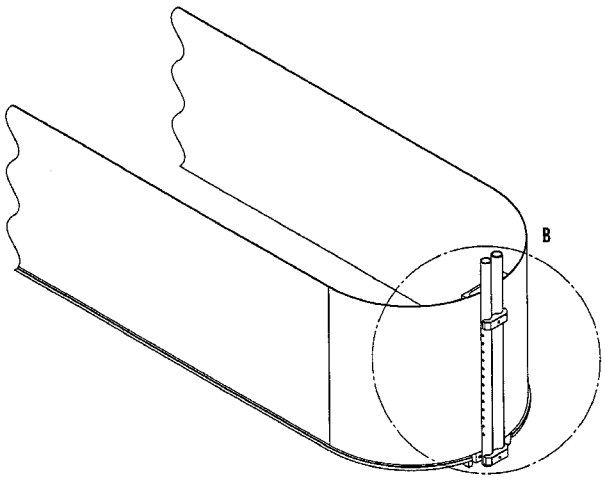

(57) **Abstract:** This application concerns a method and system using a hydrodynamical effect for producing a potential over a body. The force obtained this way is useful for the propulsion and manoeuvering of ships, submarines, aeroplanes, and airships. A body immersed in a fluid at rest is subject to equal pressures on all sides. A stream close to one side of the body will reduce the local pressure and produce a potential over the body. This is currently done by moving the body in the fluid, *cf.* aeroplane wings. The potential may be produced by setting up a stream or streams over one side of the body. Bodies attached to aeroplanes by hinges are useful for their lift, propulsion and manoeuvering, and will make them independent of velocity for lift and manoeuvering. The same will be the case for submarines. Airships and seagoing vessels may be designed so as to have their propulsive bodies integrated in their form. The streams are produced from nozzles, holes, or slits in tubes placed near the stagnation line of each body, thus defining its leading edge. Used on a ship, this technique lowers its bow wave and removes the dynamical losses connected with screw propulsion. The manoeuvering force and precision are enhanced.

WO 03/045778 A1