The invention relates to a cell for performing optical measurements in an automatic analyzer and more particularly a single cell for an analyzer for chemical analyses.

Cells of this kind are conventionally charged with samples and reagents in the analyzer and electro-optical analysis is carried out on the mixture of sample and reagent contained in the cell.

Analyzers are known which use single reaction or measuring cells which are placed on a suitable carrier in the analyzer by a mechanical automatically controlled transport device and are removed therefrom after use. In these analyzers each cell remains on the cell carrier for the entire period of the analysis. Transport of each cell to the cell carrier and its removal from the carrier therefore take place only once. The risk of a cell being lost during transport is therefore relatively low.

In modern analyzers in which the attempt is made to achieve a high number of measurements per unit of time, and correspondingly short cycle times are to be used, it is desirable to carry out some of the steps of the analysis process (e.g. the addition of reagents to individual cells, carrying out mixing movements of the cells, and so on) outside the cell carrier, and to use the cell carrier predominantly for performing optical measurements on the mixtures of sample and reagent in the cells. For this purpose, the transport of each cell to the cell carrier and its removal from the carrier must be carried out a number of times. Also, the transport system must allow each cell to be transported between the cell carrier and different processing stations. In addition, some analysis systems operate with rotatable cell carriers and it may be desirable for the transport movements of the cells to be effected even when the cell carrier is rotating. Consequently, the risk of a cell going

possibility of cell losses during their transport would make necessary at least visual monitoring of the transport of the cells during the operation of the analyzer , and this is practically impossible for various reasons.

A main object of the invention, therefore, is to provide a cell of the type indicated in the preamble so devised as to allow transportation of the individual cells within the analyzer without any risk of loss.

A further object of the invention is to provide a cell of the type indicated in the preamble which is suitable for performing spectrophotometrical absorbance measurements of the sample reagent mixture contained in the cell and which is also suitable for performing fluorescence polarization measurements of that mixture.

According to the invention, this problem is solved by a cell which is characterized in that

a) it is a part moulded in one piece from a transparent plastic,

b) it has a tubular body which has two plane-parallel walls and and which is open at one end and closed at the opposite end by a bottom wall,

c) each of the plane-parallel walls at the open end of the body has a tongue which extends outwardly from the edge of the open end and which is directed perpendicularly to the plane-parallel walls,

d) each tongue has a cylindrical recess in its center, and

e) the tongues and their recesses are symmetrical relatively to one another with respect to the longitudinal axis of the cell.

This Sheet Has Been Replaced

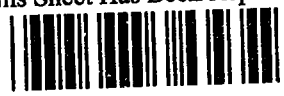

during their transportation. In this way the cell according to the invention allows fully automatic loss-free cell transport within the analyzer system, even if repeated transport of each cell is necessary between the cell carrier and different processing stations. This transport can if necessary be carried out with the cell carrier rotating. There is therefore no need to monitor the cell transport.

A preferred embodiment of the cell according to the invention is characterized in that the diameter of each recess is approximately half the dimension of the tongue in the direction perpendicular to the plane-parallel walls.

Another preferred embodiment of the cell according to the invention is characterized in that the depth of each recess is approximately half the dimension of the tongue in the direction parallel to the plane-parallel walls.

Another preferred embodiment of the cell according to the invention is characterized in that the zone of each tongue situated between the open end of its recess and the outer edge of the tongue has a flat surface which forms an angle of approximately 45° with a plane perpendicular to the longitudinal axis of the cell. This embodiment has the advantage that the special construction of the tongue provides more reliable cooperation between the tongue and a mechanical gripper.

Another preferred embodiment of the cell according to the invention is characterized in that the tubular body has two side-walls which extend between the plane-parallel walls, said side-walls having each an upper part and a lower part, the lower part being adjacent to the bottom wall, the lower part of each side-wall including an elongated, leg-shaped outer projection which extends longitudinally between the upper part of the side-wall to a point close to the bottom wall. The provision of this leg-shaped projection

This Sheet Has Been Replaced

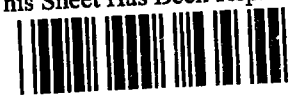

further aim of the invention.

Another preferred embodiment of the cell according to the invention is characterized in that the bottom wall of the cell has the shape of a half-cylinder. This shape of the bottom wall makes the cell particularly suitable for fluorescence polarization measurements.

One exemplified embodiment of the invention is described below with reference to the accompanying drawings wherein:

Fig. 1 is a perspective view of a cell according to the invention.

Fig. 2 is a first side elevation of the cell according to Fig. 1.

Fig. 3 is a plan view of the cell according to Fig. 1.

Fig. 4 is a second side elevation of the cell according to Fig. 1.

Fig. 5 is a bottom plan view of the cell according to Fig. 1.

Fig. 6 is a cross-section on the line A-A in Figs. 3 and 7.

Fig. 7 is a cross-section on the line B-B in Fig. 6.

The cell 11 shown in the accompanying drawings is a one-piece part moulded from a transparent plastic, e.g. a polymethyl-methacrylate injection moulding material. The construction of this cell as described below makes it suitable for performing optical measurements on the cell contents.

The cell 11 has a tubular body 12, which has two plane-parallel walls 13, 14 and two side walls 27, 28, and which is open at one end 15 and closed by a bottom wall 16 at the opposite end. When optical measurements are carried out on the cell contents, the

This Sheet Has Been Replaced



of the open end 15 outwardly and directed perpendicularly to the plane-parallel walls 13, 14.

Each tongue 17, 18 has a cylindrical recess 21, 22 in the center. The tongues 17, 18 and their recesses 21, 22 are symmetrical relatively to one another with respect to the longitudinal axis (Y-Y) of the cell 11.

The diameter of each of the recesses 21, 22 is preferably approximately half the dimension of the tongue 17, 18 in the direction perpendicular to the plane-parallel walls 13, 14. This dimension is the width of the tongue comprised between the edge of the open end of the tubular body of the cell and the outer edge of the tongue.

The depth of each of the recesses 21, 22 is preferably approximately half the dimension of the tongue 17, 18 in the direction parallel to the plane-parallel walls 13, 14. This dimension is the thickness of the tongue.

At each tongue 17, 18, the zone between the open end of its recess 21, 22 and the outer edge 23, 24 of the tongue preferably has a flat surface 25, 26, which forms an angle of approximately 45° with a plane perpendicular to the longitudinal axis Y-Y of the cell.

The above-described construction of the cell 11 makes it optimally suitable for engagement by a gripper (not shown in the drawings) in the form of tongs and forming part of a transport device, said gripper being adapted, by means of a drive and appropriate control for the same, to engage the cell in a predetermined withdrawal position, carry it to a predetermined delivery position, and deliver it there.

This Sheet Has Been Replaced



in particular the lower portion of the plan-parallel walls 13, 14 which are used as optical windows for the photometrical measurements have to satisfy the optical requirements for performing such measurements.

Since the cell according to the invention should also be used for performing fluorescence polarization measurements and since for these measurements light leaving the cell through the bottom wall 16 is measured, this bottom wall has to satisfy the optical requirements for performing such measurements.

In order to obtain the desired accuracy when performing fluorescence polarization measurements, the change of light polarization introduced by the optical windows involved, i.e. the respective portions of the plane-parallel walls 13, 14 and of the bottom wall 16 of the cell has to be very low. In order to obtain this property, during the injection moulding process to make the cell the location of the feeding point is chosen adjacent to the top edge of the cell, i.e. as far as possible from the lower part of the cell where the optical windows are located. This choice causes however a confluence of material which is adverse to the obtention of the desirable optical properties of the optical windows and difficulties for the exhaustion of air during the injection moulding process.

These difficulties are overcome by the following structure of the cell. As shown by Figures 1, 2, 4, 5 and 7 the tubular body 12 has two side-walls 27, 28 which extend between the plane-parallel walls 13, 14, said side-walls having each an upper part and a lower part, the lower part being adjacent to the bottom wall 16. The lower part of each side-wall 27, 28 includes an elongated, leg-shaped outer projection 31, 32 which extends longitudinally between the upper part of the side-wall to a point close to the bottom wall 16. The provision of leg-shaped projections 31, 32 during the manufacturing process of the cell by injection moulding makes it

This Sheet Has Been Replaced



measurements as well as fluorescence polarization measurements.

In order to make the exhaustion of air possible during the injection moulding process the projections 31, 32 have a longitudinal fine groove not shown in the enclosed drawings.

Another preferred embodiment of the cell according to the invention is characterized in that the bottom wall 16 of the cell has the shape of a half-cylinder. This shape of the bottom wall makes the cell particularly suitable for fluorescence polarization measurements, because the necessary computations are simplified by the fact that the exciting light beam has a circular cross-section and the bottom wall 16 is cylindrical.

***

This Sheet Has Been Replaced



b) it has a tubular body (12) which has two plane-parallel walls (13, 14) and which is open at one end (15) and closed at the opposite end by a bottom wall (16),

c) each of the plane-parallel walls (13, 14) at the open end (15) of the body has a tongue (17, 18) which extends outwardly from the edge of the open end (15) and which is directed perpendicularly to the plane-parallel walls (13, 14),

d)each tongue (17, 18) has a cylindrical recess (21, 22) in its center and

e) the tongues (17, 18) and their recesses (21, 22) are symmetrical relatively to one another with respect to the longitudinal axis of the cell (11).

2. A cell according to claim 1, characterized in that the diameter of each recess (21, 22) is approximately half the dimension of the tongue (17, 18) in the direction perpendicular to the plane-parallel walls (13, 14).

3. A cell according to claim 1, characterized in that the depth of each recess (21, 22) is approximately half the dimension of the tongue (17, 18) in the direction parallel to the plane-parallel walls (13, 14).

4. A cell according to claim 1, characterized in that the zone of each tongue (17, 18) situated between the open end (15) of its recess (21, 22) and the outer edge (23, 24) of the tongue has a flat surface (25, 26) which forms an angle of approximately 45° with a plane perpendicular to the longitudinal axis of the cell.

5. A cell according to claim 1, characterized in that the tubular body (12) has two side-walls (27, 28) which extend between the plane-parallel walls (13, 14), said side-walls having each an upper part and a lower part, the lower part being adjacent to the bottom wall (16), the lower part of each side-wall (27, 28) including an

This Sheet Has Been Replaced



wall (16) of the cell has the shape of a half-cylinder.

***

* C L M S *

This Sheet Has Been Replaced

Abstract

A cell (11) for performing optical measurements in an automatic analyzer and more particularly a single cell for an analyzer for clinical chemical analyses.

To allow automatic transport of the cell in the analyzer without any risk of loss, the cell is characterized in that

a) it is a part moulded in one piece from a transparent plastic,

b) it has a tubular body (12) which has two plane-parallel walls (13, 14) and and which is open at one end (15) and closed at the opposite end by a bottom wall (16),

c) each of the plane-parallel walls (13, 14) at the open end (15) of the body has a tongue (17, 18) which extends outwardly from the edge of the open end (15) and which is directed perpendicularly to the plane-parallel walls (13, 14),

d) each tongue (17, 18) has a cylindrical recess (21, 22) in its center and

e) the tongues (17, 18) and their recesses (21, 22) are symmetrical relatively to one another with respect to the longitudinal axis of the cell (11) .

Fig. 1

This Sheet Has Been Replaced



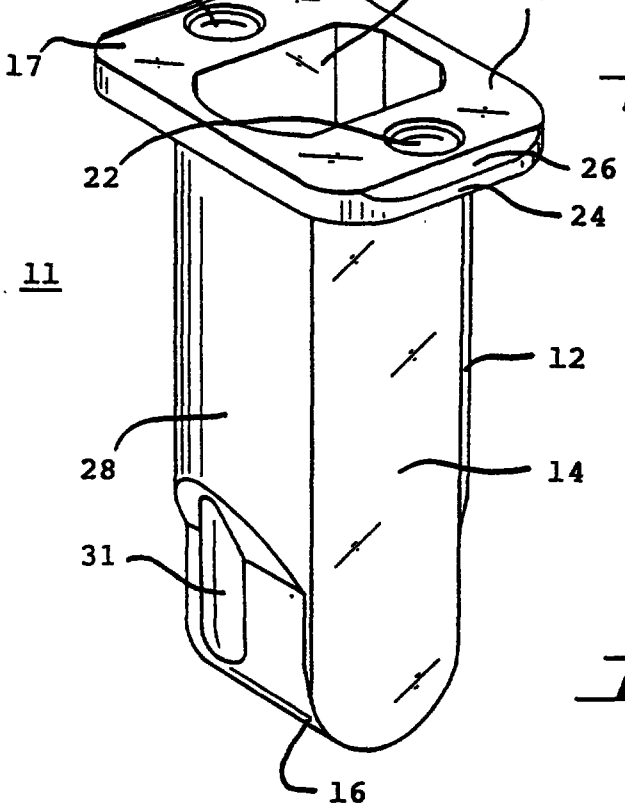

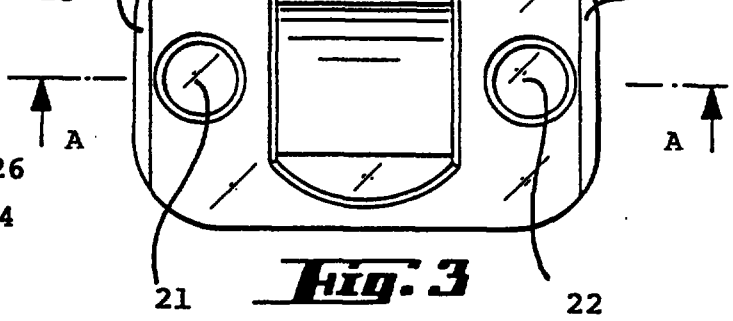

Fig. 3

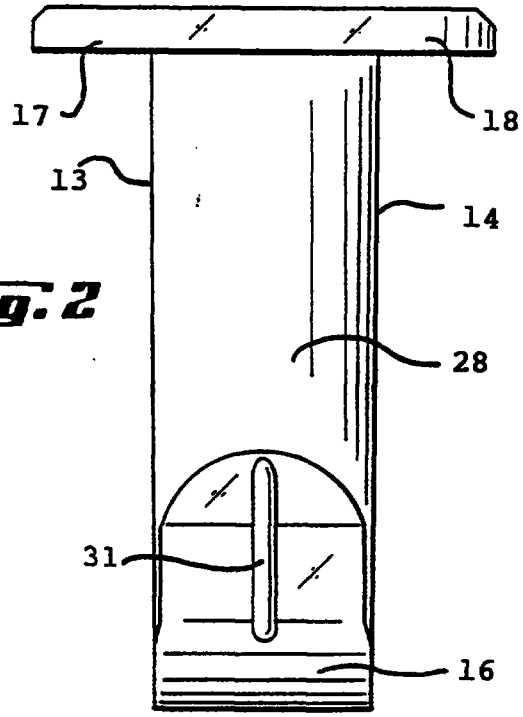

Fig. 2

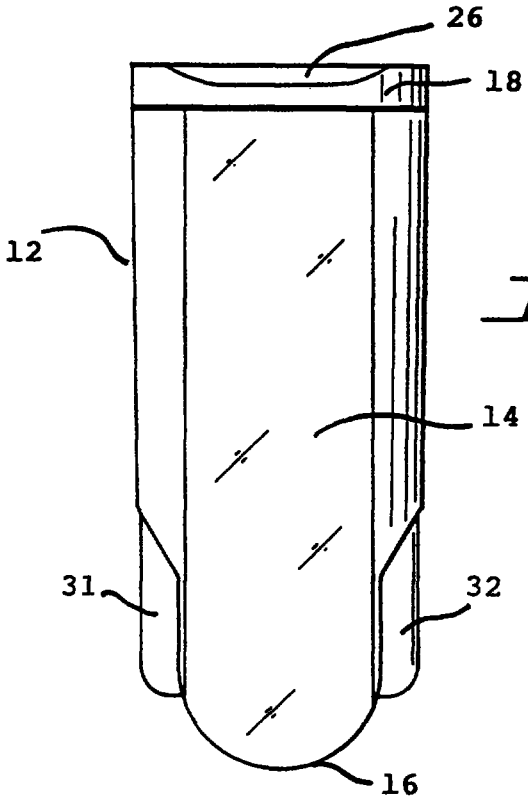

Fig. 4

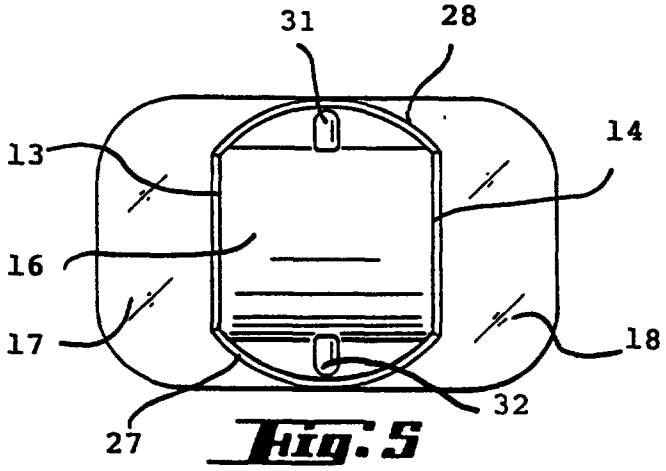

Fig. 5

Fig. 7

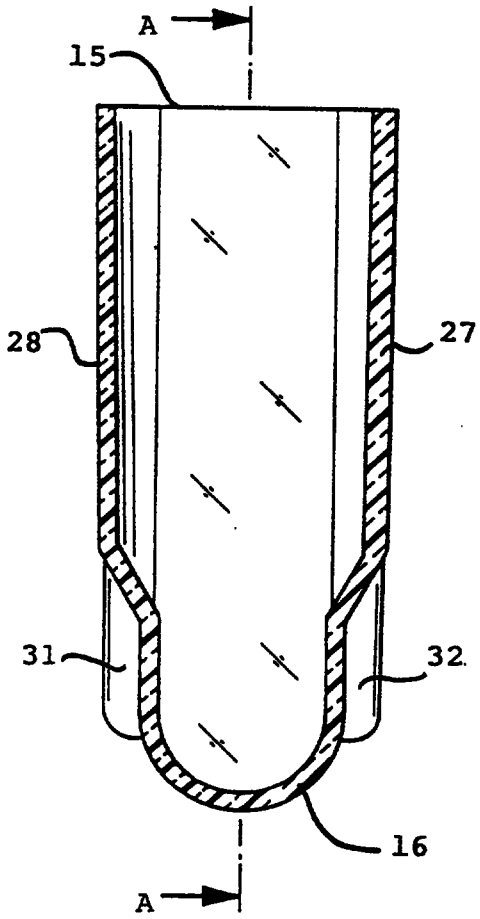

Fig. 6

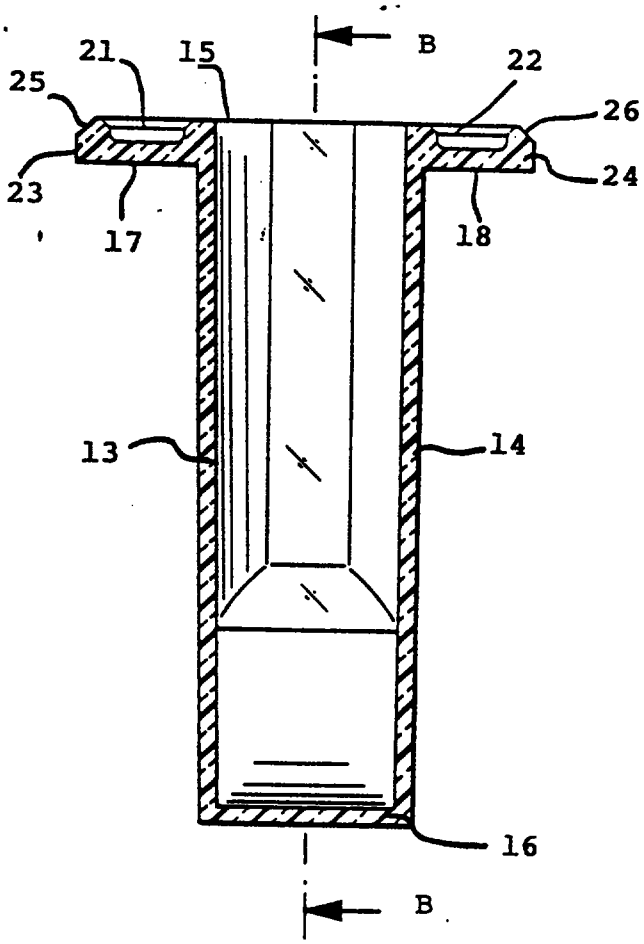

This Sheet Has Been Replaced

The invention relates to a cell for performing optical measurements in an automatic analyzer and more particularly a single cell for an analyzer for chemical analyses.

Cells of this kind are conventionally charged with samples and reagents in the analyzer and electro-optical analysis is carried out on the mixture of sample and reagent contained in the cell.

Analyzers are known which use single reaction or measuring cells which are placed on a suitable carrier in the analyzer by a mechanical automatically controlled transport device and are removed therefrom after use. In these analyzers each cell remains on the cell carrier for the entire period of the analysis. Transport of each cell to the cell carrier and its removal from the carrier therefore take place only once. The risk of a cell being lost during transport is therefore relatively low.

In modern analyzers in which the attempt is made to achieve a high number of measurements per unit of time, and correspondingly short cycle times are to be used, it is desirable to carry out some of the steps of the analysis process (e.g. the addition of reagents to individual cells, carrying out mixing movements of the cells, and so on) outside the cell carrier, and to use the cell carrier predominantly for performing optical measurements on the mixtures of sample and reagent in the cells. For this purpose, the transport of each cell to the cell carrier and its removal from the carrier must be carried out a number of times. Also, the transport system must allow each cell to be transported between the cell carrier and different processing stations. In addition, some analysis systems operate with rotatable cell carriers and it may be desirable for the transport movements of the cells to be effected even when the cell carrier is rotating. Consequently, the risk of a cell going

is unacceptable. In otherwise extensively automated analyzers any possibility of cell losses during their transport would make necessary at least visual monitoring of the transport of the cells during the operation of the analyzer , and this is practically impossible for various reasons.

A main object of the invention, therefore, is to provide a cell of the type indicated in the preamble so devised as to allow transportation of the individual cells within the analyzer without any risk of loss.

A further object of the invention is to provide a cell of the type indicated in the preamble which is suitable for performing spectrophotometrical absorbance measurements of the sample reagent mixture contained in the cell and which is also suitable for performing fluorescence polarization measurements of that mixture.

According to the invention, this problem is solved by a cell which is characterized in that

a) it is a part moulded in one piece from a transparent plastic,

b) it has a tubular body which has two plane-parallel walls and and which is open at one end and closed at the opposite end by a bottom wall,

c) each of the plane-parallel walls at the open end of the body has a tongue which extends outwardly from the edge of the open end and which is directed perpendicularly to the plane-parallel walls,

d) each tongue has a cylindrical recess in its center, and

e) the tongues and their recesses are symmetrical relatively to one another with respect to the longitudinal axis of the cell.

gripper of the transport system as to preclude any loss of cells during their transportation. In this way the cell according to the invention allows fully automatic loss-free cell transport within the analyzer system, even if repeated transport of each cell is necessary between the cell carrier and different processing stations. This transport can if necessary be carried out with the cell carrier rotating. There is therefore no need to monitor the cell transport.

A preferred embodiment of the cell according to the invention is characterized in that the diameter of each recess is approximately half the dimension of the tongue in the direction perpendicular to the plane-parallel walls.

Another preferred embodiment of the cell according to the invention is characterized in that the depth of each recess is approximately half the dimension of the tongue in the direction parallel to the plane-parallel walls.

Another preferred embodiment of the cell according to the invention is characterized in that the zone of each tongue situated between the open end of its recess and the outer edge of the tongue has a flat surface which forms an angle of approximately 45° with a plane perpendicular to the longitudinal axis of the cell. This embodiment has the advantage that the special construction of the tongue provides more reliable cooperation between the tongue and a mechanical gripper.

Another preferred embodiment of the cell according to the invention is characterized in that the tubular body has two side-walls which extend between the plane-parallel walls, said side-walls having each an upper part and a lower part, the lower part being adjacent to the bottom wall, the lower part of each side-wall including an elongated, leg-shaped outer projection which extends longitudinally between the upper part of the side-wall to a point close to the bottom wall. The provision of this leg-shaped projection

fluorescence polarization measurements. Thus the provision of said leg-projection makes it possible to attain the above mentioned further aim of the invention.

Another preferred embodiment of the cell according to the invention is characterized in that the bottom wall of the cell has the shape of a half-cylinder. This shape of the bottom wall makes the cell particularly suitable for fluorescence polarization measurements.

One exemplified embodiment of the invention is described below with reference to the accompanying drawings wherein:

Fig. 1 is a perspective view of a cell according to the invention.

Fig. 2 is a first side elevation of the cell according to Fig. 1.

Fig. 3 is a plan view of the cell according to Fig. 1.

Fig. 4 is a second side elevation of the cell according to Fig. 1.

Fig. 5 is a bottom plan view of the cell according to Fig. 1.

Fig. 6 is a cross-section on the line A-A in Figs. 3 and 7.

Fig. 7 is a cross-section on the line B-B in Fig. 6.

The cell 11 shown in the accompanying drawings is a one-piece part moulded from a transparent plastic, e.g. a polymethyl-methacrylate injection moulding material. The construction of this cell as described below makes it suitable for performing optical measurements on the cell contents.

The cell 11 has a tubular body 12, which has two plane-parallel walls 13, 14 and two side walls 27, 28, and which is open at one end 15 and closed by a bottom wall 16 at the opposite end. When optical measurements are carried out on the cell contents, the

Each of the plane-parallel walls 13, 14 has a tongue 17, 18 at the open end 15 of the body, such tongue extending from the edge of the open end 15 outwardly and directed perpendicularly to the plane-parallel walls 13, 14.

Each tongue 17, 18 has a cylindrical recess 21, 22 in the center. The tongues 17, 18 and their recesses 21, 22 are symmetrical relatively to one another with respect to the longitudinal axis (Y-Y) of the cell 11.

The diameter of each of the recesses 21, 22 is preferably approximately half the dimension of the tongue 17, 18 in the direction perpendicular to the plane-parallel walls 13, 14. This dimension is the width of the tongue comprised between the edge of the open end of the tubular body of the cell and the outer edge of the tongue.

The depth of each of the recesses 21, 22 is preferably approximately half the dimension of the tongue 17, 18 in the direction parallel to the plane-parallel walls 13, 14. This dimension is the thickness of the tongue.

At each tongue 17, 18, the zone between the open end of its recess 21, 22 and the outer edge 23, 24 of the tongue preferably has a flat surface 25, 26, which forms an angle of approximately 45° with a plane perpendicular to the longitudinal axis Y-Y of the cell.

The above-described construction of the cell 11 makes it optimally suitable for engagement by a gripper (not shown in the drawings) in the form of tongs and forming part of a transport device, said gripper being adapted, by means of a drive and appropriate control for the same, to engage the cell in a predetermined withdrawal position, carry it to a predetermined delivery position, and deliver it there.

14, which lower part is adjacent to the bottom wall 16. Therefore, in particular the lower portion of the plan-parallel walls 13, 14 which are used as optical windows for the photometrical measurements have to satisfy the optical requirements for performing such measurements.

Since the cell according to the invention should also be used for performing fluorescence polarization measurements and since for these measurements light leaving the cell through the bottom wall 16 is measured, this bottom wall has to satisfy the optical requirements for performing such measurements.

In order to obtain the desired accuracy when performing fluorescence polarization measurements, the change of light polarization introduced by the optical windows involved, i.e. the respective portions of the plane-parallel walls 13, 14 and of the bottom wall 16 of the cell has to be very low. In order to obtain this property, during the injection moulding process to make the cell the location of the feeding point is chosen adjacent to the top edge of the cell, i.e. as far as possible from the lower part of the cell where the optical windows are located. This choice causes however a confluence of material which is adverse to the obtention of the desirable optical properties of the optical windows and difficulties for the exhaustion of air during the injection moulding process.

These difficulties are overcome by the following structure of the cell. As shown by Figures 1, 2, 4, 5 and 7 the tubular body 12 has two side-walls 27, 28 which extend between the plane-parallel walls 13, 14, said side-walls having each an upper part and a lower part, the lower part being adjacent to the bottom wall 16. The lower part of each side-wall 27, 28 includes an elongated, leg-shaped outer projection 31, 32 which extends longitudinally between the upper part of the side-wall to a point close to the bottom wall 16. The provision of leg-shaped projections 31, 32 during the manufacturing process of the cell by injection moulding makes it

satisfy the optical requirements on the above mentioned optical windows in both the plane-parallel walls 13, 14 and the bottom wall 16 for performing spectrophotometrical absorbance measurements as well as fluorescence polarization measurements.

In order to make the exhaustion of air possible during the injection moulding process the projections 31, 32 have a longitudinal fine groove not shown in the enclosed drawings.

Another preferred embodiment of the cell according to the invention is characterized in that the bottom wall 16 of the cell has the shape of a half-cylinder. This shape of the bottom wall makes the cell particularly suitable for fluorescence polarization measurements, because the necessary computations are simplified by the fact that the exciting light beam has a circular cross-section and the bottom wall 16 is cylindrical.

***

a) it is a part moulded in one piece from a transparent plastic,
b) it has a tubular body (12) which has two plane-parallel walls (13, 14) and which is open at one end (15) and closed at the opposite end by a bottom wall (16),
c) each of the plane-parallel walls (13, 14) at the open end (15) of the body has a tongue (17, 18) which extends outwardly from the edge of the open end (15) and which is directed perpendicularly to the plane-parallel walls (13, 14),
d)each tongue (17, 18) has a cylindrical recess (21, 22) in its center and
e) the tongues (17, 18) and their recesses (21, 22) are symmetrical relatively to one another with respect to the longitudinal axis of the cell (11).

2. A cell according to claim 1, characterized in that the diameter of each recess (21, 22) is approximately half the dimension of the tongue (17, 18) in the direction perpendicular to the plane-parallel walls (13, 14).

3. A cell according to claim 1, characterized in that the depth of each recess (21, 22) is approximately half the dimension of the tongue (17, 18) in the direction parallel to the plane-parallel walls (13, 14).

4. A cell according to claim 1, characterized in that the zone of each tongue (17, 18) situated between the open end (15) of its recess (21, 22) and the outer edge (23, 24) of the tongue has a flat surface (25, 26) which forms an angle of approximately 45° with a plane perpendicular to the longitudinal axis of the cell.

5. A cell according to claim 1, characterized in that the tubular body (12) has two side-walls (27, 28) which extend between the plane-parallel walls (13, 14), said side-walls having each an upper part and a lower part, the lower part being adjacent to the bottom wall (16), the lower part of each side-wall (27, 28) including an

* C L M S *

6. A cell according to claim 1, characterized in that the bottom wall (16) of the cell has the shape of a half-cylinder.

***

This Sheet Has Been Replaced





Abstract

A cell (11) for performing optical measurements in an automatic analyzer and more particularly a single cell for an analyzer for clinical chemical analyses.

To allow automatic transport of the cell in the analyzer without any risk of loss, the cell is characterized in that

a) it is a part moulded in one piece from a transparent plastic,

b) it has a tubular body (12) which has two plane-parallel walls (13, 14) and and which is open at one end (15) and closed at the opposite end by a bottom wall (16),

c) each of the plane-parallel walls (13, 14) at the open end (15) of the body has a tongue (17, 18) which extends outwardly from the edge of the open end (15) and which is directed perpendicularly to the plane-parallel walls (13, 14),

d) each tongue (17, 18) has a cylindrical recess (21, 22) in its center and

e) the tongues (17, 18) and their recesses (21, 22) are symmetrical relatively to one another with respect to the longitudinal axis of the cell (11) .

Fig. 1

This Sheet Has Been Replaced



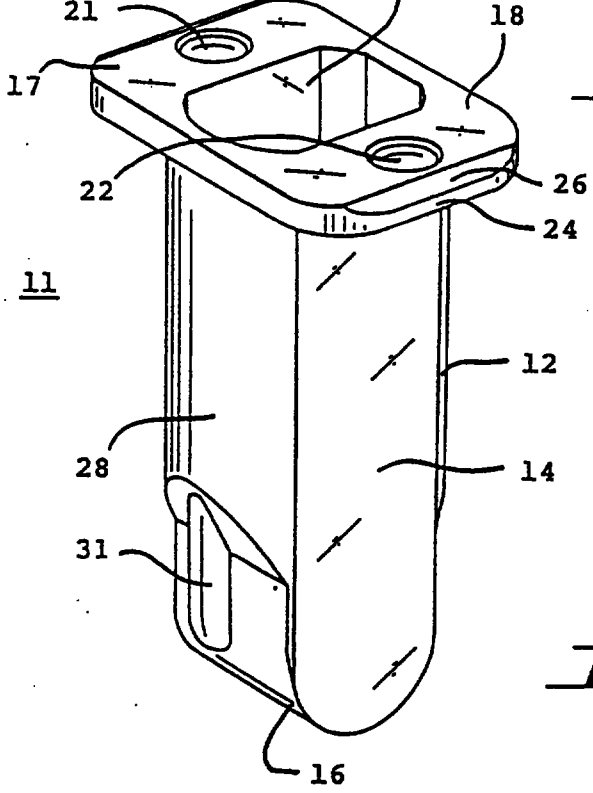

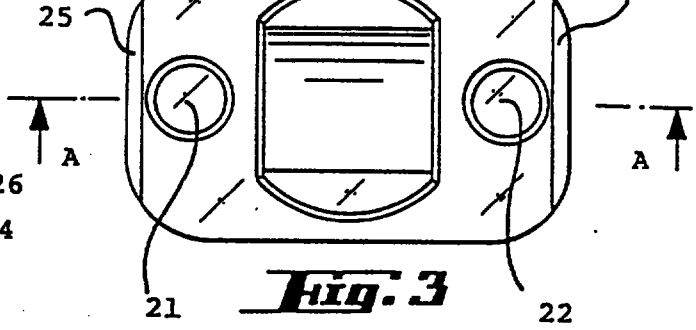

Fig. 3

Fig. 2

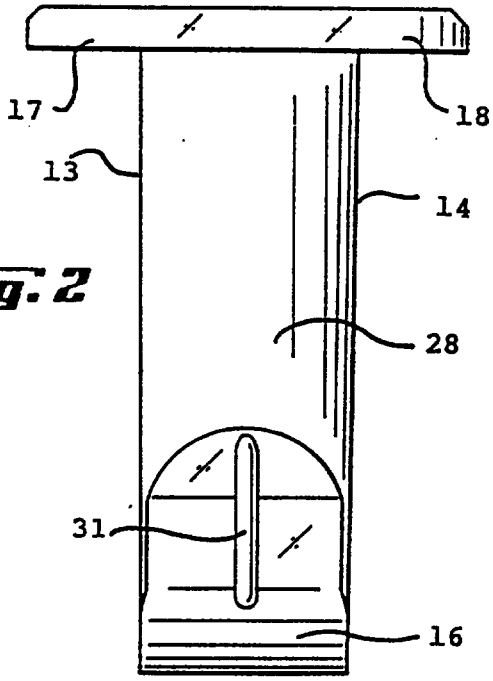

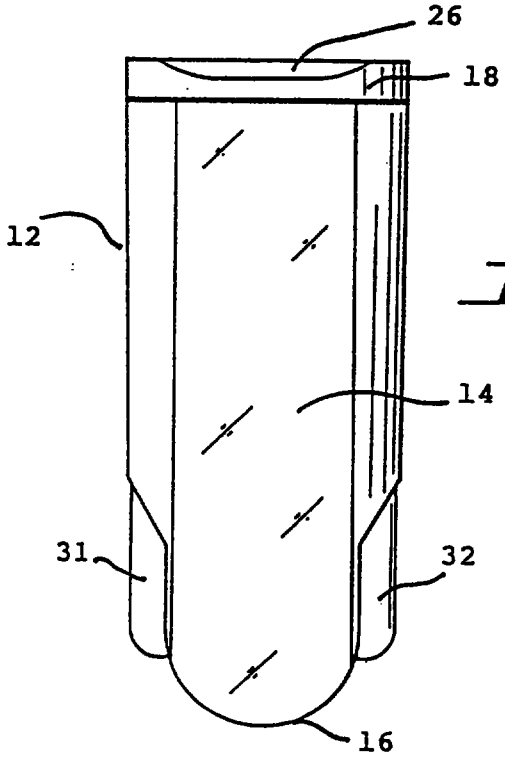

Fig. 4

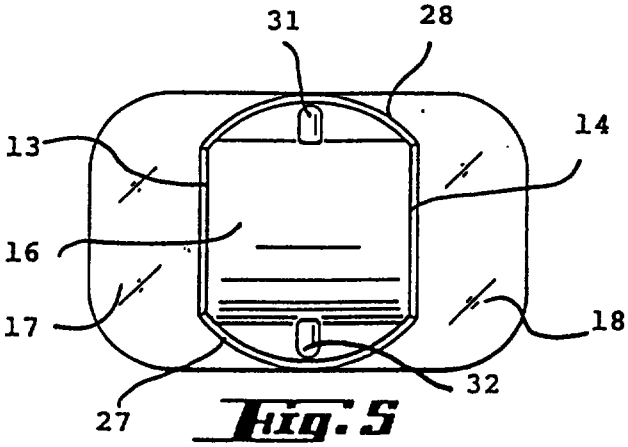

Fig. 5

Fig. 6

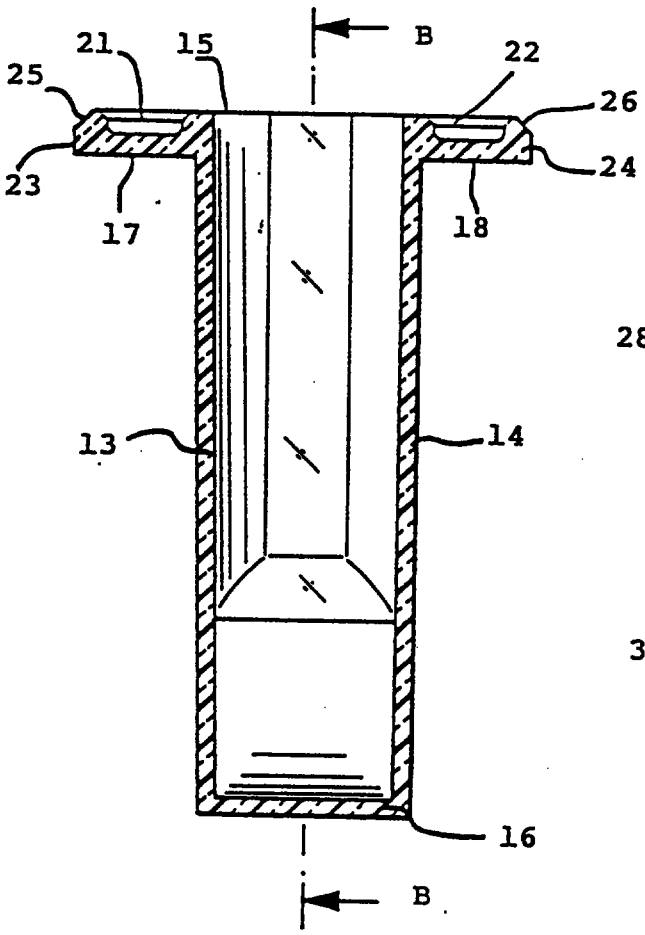

Fig. 7

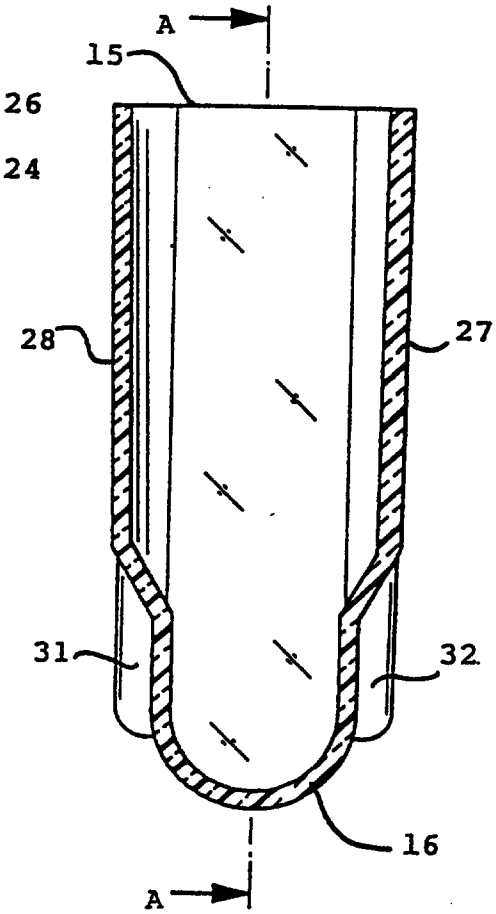

a) a tubular body having i) two opposite ends, ii) two plane-parallel walls positioned parallel to each other and to the longitudinal axis of the cell, said walls extending between said two opposite ends, and iii) a bottom wall having the shape of a half-cylinder of a preselected diameter, projecting away from the tubular body, the first opposite end being open and the second opposite end being closed by the bottom wall,

b) each of the plane-parallel walls at the open end of the tubular body having a tongue member which extends outwardly from the open end in a direction perpendicular to the plane-parallel wall and ending at an outer edge,

c) each tongue having an upper surface and a recess,

d) the tongues and their recesses being symmetrical relatively to one another with respect to the longitudinal axis of the cell, and

e) said cell having a one piece molded construction of transparent plastic material, and being constructed and arranged such that the dimensions of the tongue and its corresponding recess are preselected to permit cooperation with a gripping means to releasably engage therewith.

2. A cell according to claim 1, wherein the recesses each have an upper part and a lower part, the upper part of each recess having the shape of a truncated cone, and the lower part of each recess having a cylindrical shape.

3. A cell according to claim 1, wherein each of the recesses has the shape of a truncated cone.

4. A cell according to claim 1, wherein the maximal width of each recess measured in the direction perpendicular to the plane parallel walls is approximately half the length of the corresponding tongue measured in the direction perpendicular to the plane-parallel walls.

6. A cell according to claim 1, wherein each tongue has a zone situated between its recess and the outer edge of the tongue , the zone having a flat upper surface which forms a preselected angle with a plane perpendicular to the longitudinal axis of the cell.

7. A cell according to claim 1, wherein the tubular body has two side-walls which extend between the plane-parallel walls, said side-walls having each an upper portion and a lower portion , the lower portion being adjacent to the bottom wall, the lower portion of each side-wall including an elongated, outer projection which extends longitudinally between the upper portion of the side-wall and a point adjacent the bottom wall along the longitudinal axis of the cell.

8. A cell for performing optical measurements in an automatic analyzer having a gripping means for transporting the cell, characterized in that

a) a tubular body having i) two opposite ends, ii) two plane-parallel walls positioned parallel to each other and to the longitudinal axis of the cell, said walls extending between said two opposite ends, and iii) a bottom wall having the shape of a half-cylinder of a preselected diameter, projecting away from the tubular body, the first opposite end being open and the second opposite end being closed by the bottom wall,

b) two tongues located adjacent to the tubular body and extending outwardly from the open end in a direction perpendicular to the plane-parallel walls and ending at an outer edge,

c) each tongue having an upper surface and a recess,

d) each tongue and its corresponding recess being positioned symmetrically relatively to the other tongue and its recess with respect to the longitudinal axis of the cell,

e) each tongue having a zone situated between its recess and the outer edge of the tongue, the zone having a flat upper surface which forms a preselected angle with a plane perpendicular to the longitudinal axis of the cell,

wall and a point adjacent the bottom wall along the longitudinal axis of the cell, and

g) said cell having a one piece molded construction of transparent plastic material, and being constructed and arranged such that the dimensions of the tongue and its corresponding recess are preselected to permit cooperation with a gripping means to releasably engage therewith.

9. A cell according to claim 8, wherein each of the recesses has the shape of a truncated cone.

***

Abstract

A cell (11) for performing optical measurements in an automatic analyzer and more particularly a single cell for an analyzer for clinical chemical analyses.

To allow automatic transport of the cell in the analyzer without any risk of loss, the cell is characterized in that

a) it is a part moulded in one piece from a transparent plastic,

b) it has a tubular body (12) which has two plane-parallel walls (13, 14) and and which is open at one end (15) and closed at the opposite end by a bottom wall (16),

c) each of the plane-parallel walls (13, 14) at the open end (15) of the body has a tongue (17, 18) which extends outwardly from the edge of the open end (15) and which is directed perpendicularly to the plane-parallel walls (13, 14),

d) each tongue (17, 18) has a cylindrical recess (21, 22) in its center and

e) the tongues (17, 18) and their recesses (21, 22) are symmetrical relatively to one another with respect to the longitudinal axis of the cell (11) .

Fig. 1

25.02.93