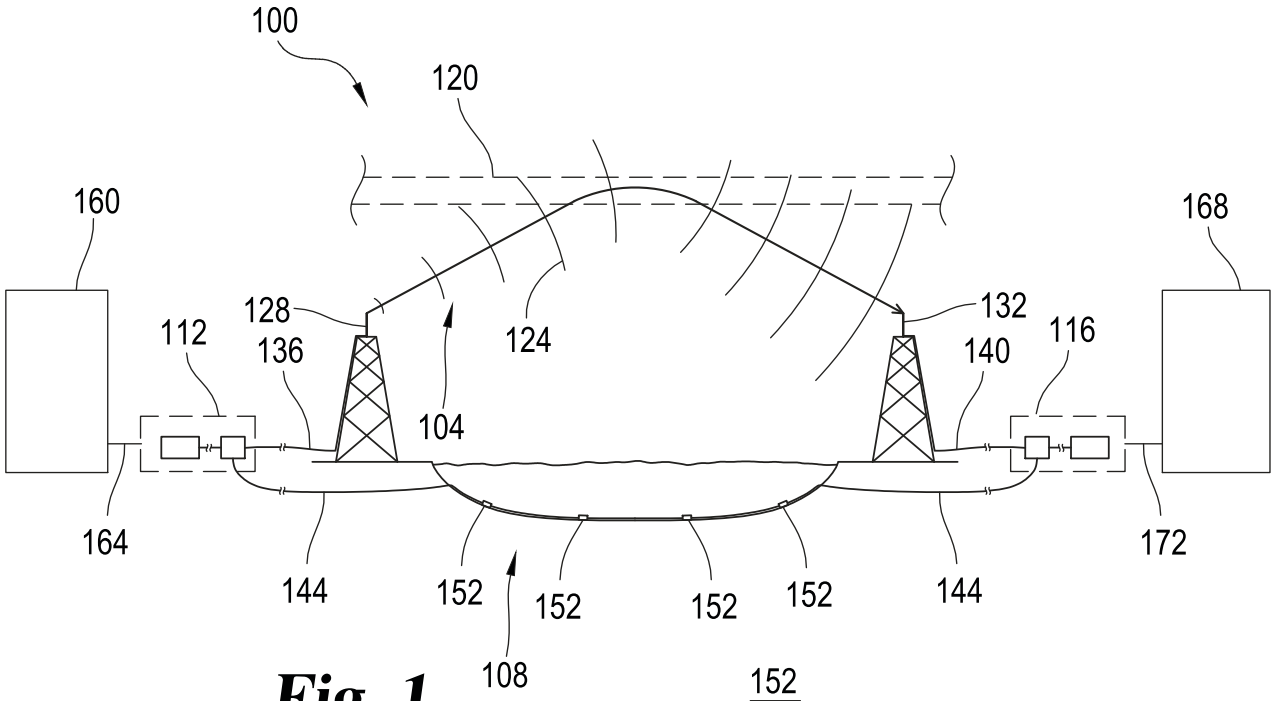
100
120
160
168
128
132
112
136
124
140
116
104
164
144
152
152
152
152
144
172
108
152

Fig. 1

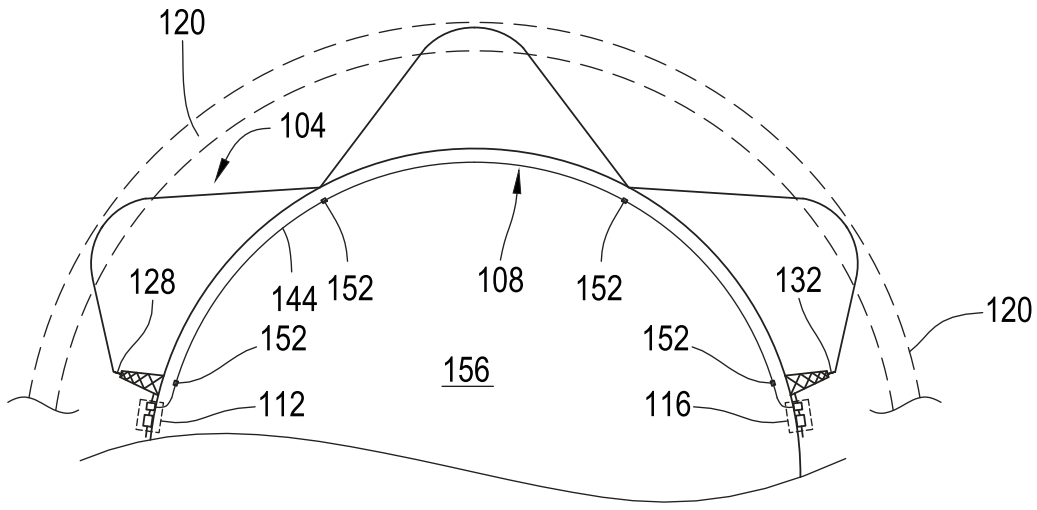
120
104
128
144
152
108
152
132
120
152
152
156
112
116

Fig. 2

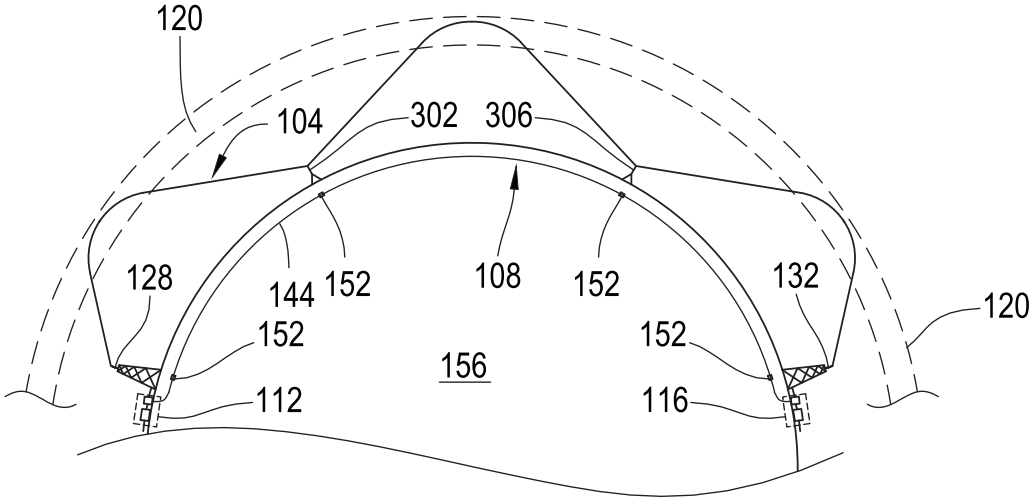
120
104
302
306
128
144
152
108
152
132
120
152
152
156
112
116

Fig. 3

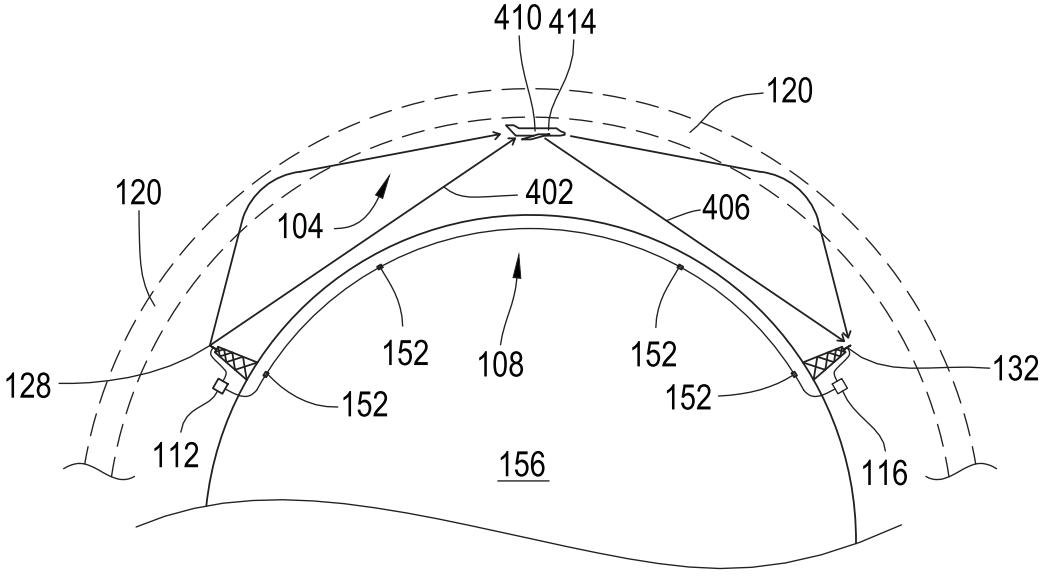
410
414
120
120
104
402
406
152
108
152
128
132
152
152
112
156
116

Fig. 4

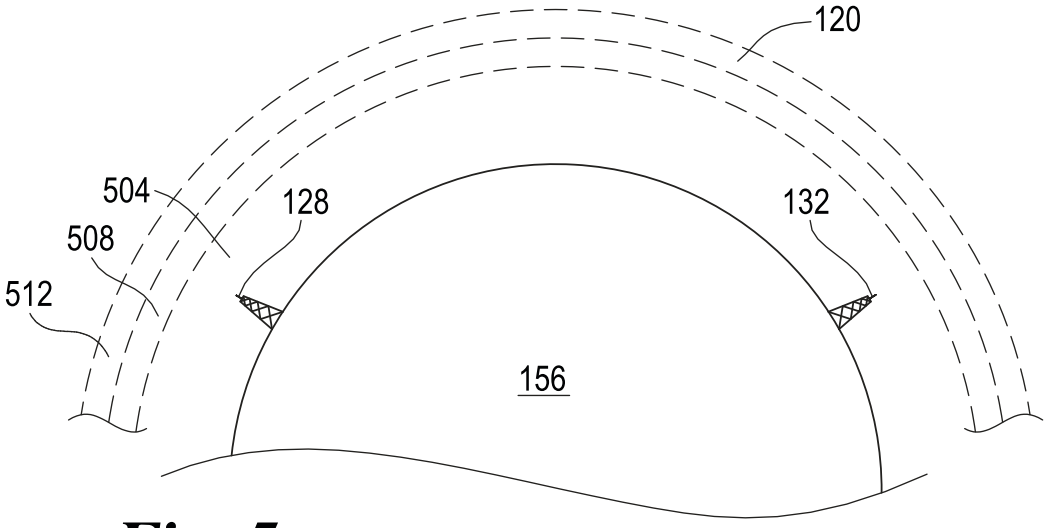
120
504
128
132
508
512
156

Fig. 5

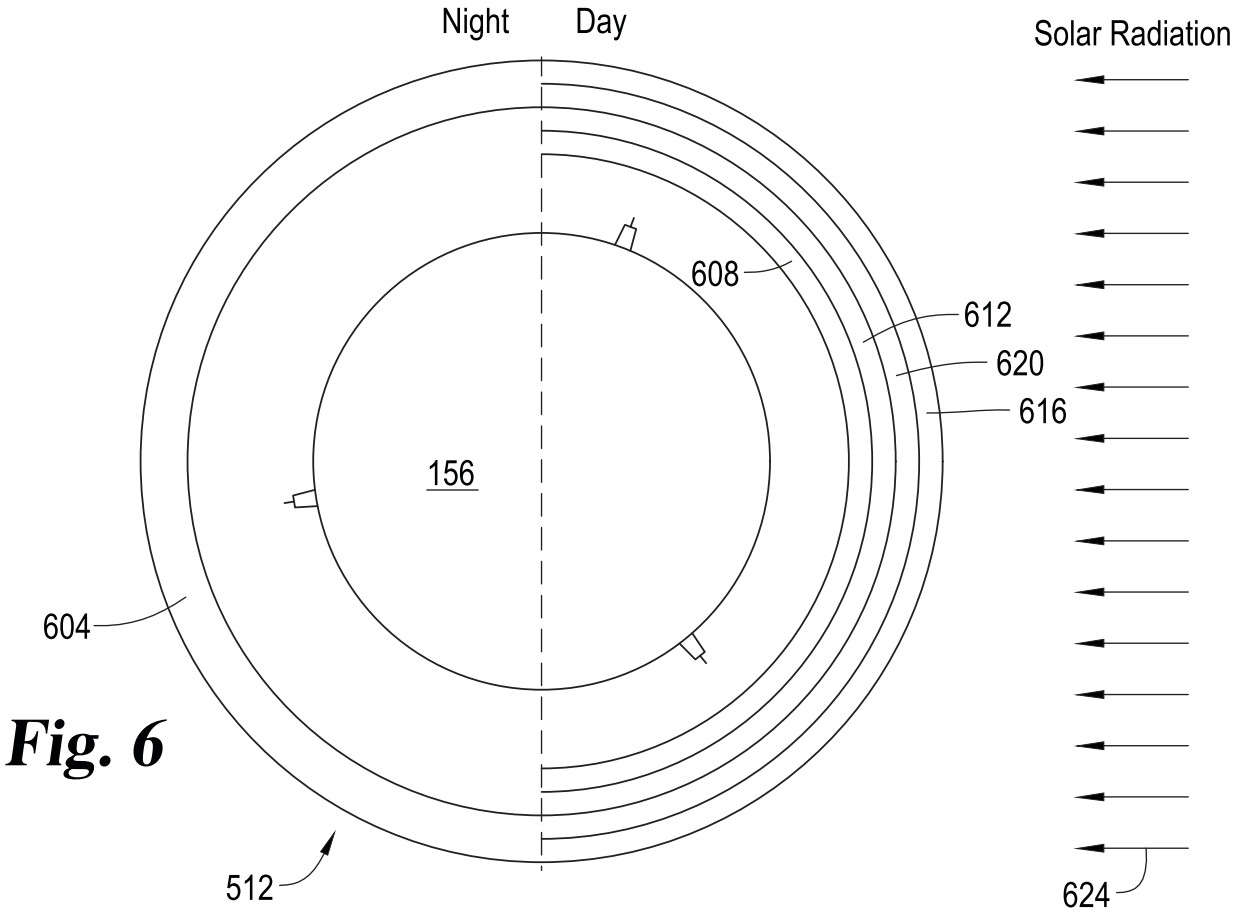
Night
Day
Solar Radiation
608
612
620
616
156
604
512
624

Fig. 6

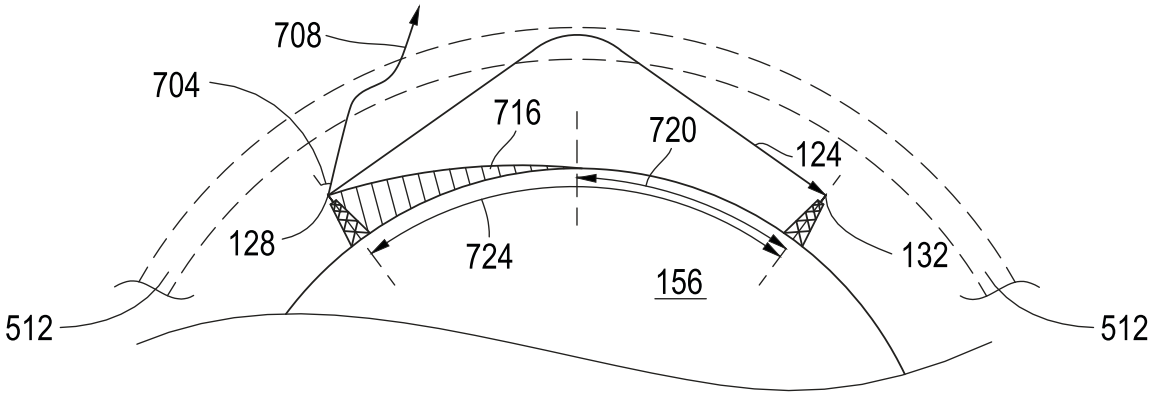
708
704
716
720
124
128
724
132
156
512
512

Fig. 7

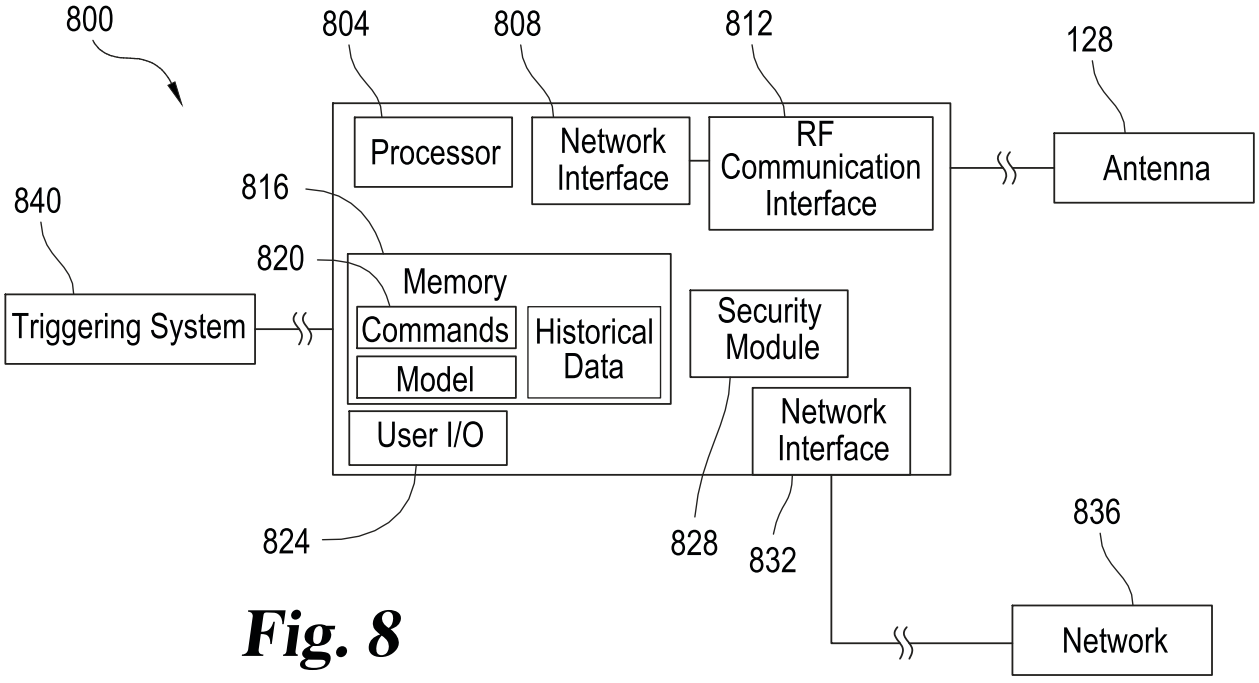
800
804
808
812
128
Processor
Network Interface
RF Communication Interface
Antenna
840
816
820
Memory
Triggering System
Commands
Historical Data
Model
Security Module
User I/O
Network Interface
824
828
832
836
Network

Fig. 8

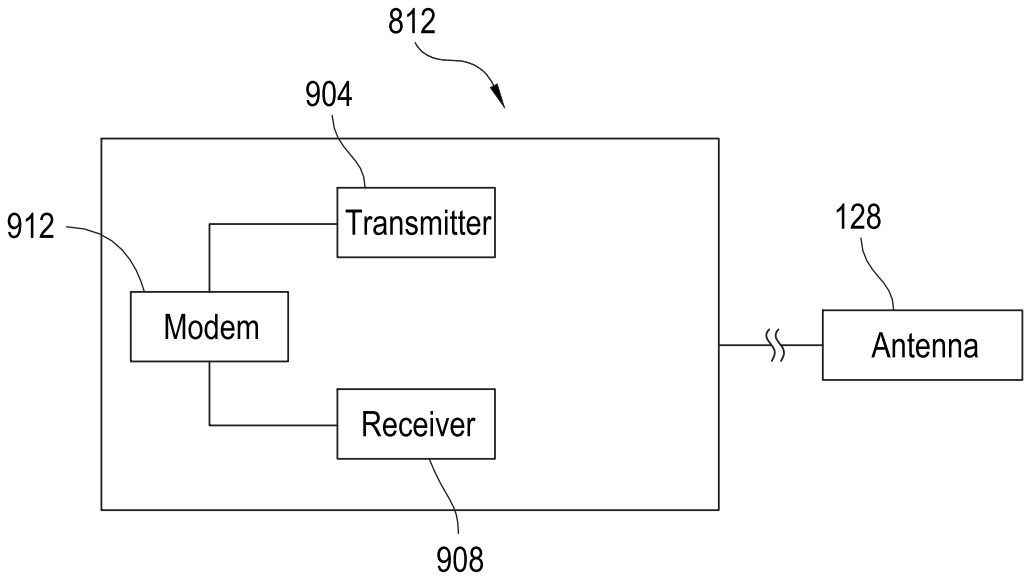

Fig. 9

1000

Provider's Decision	Decoded Signal	
	Accurate	Inaccurate
Reject decoded signal	Error Lost Opportunity Cost	Correct Decision
Allow decoded signal	Correct Decision	Error Potential Fatal Error

Fig. 10

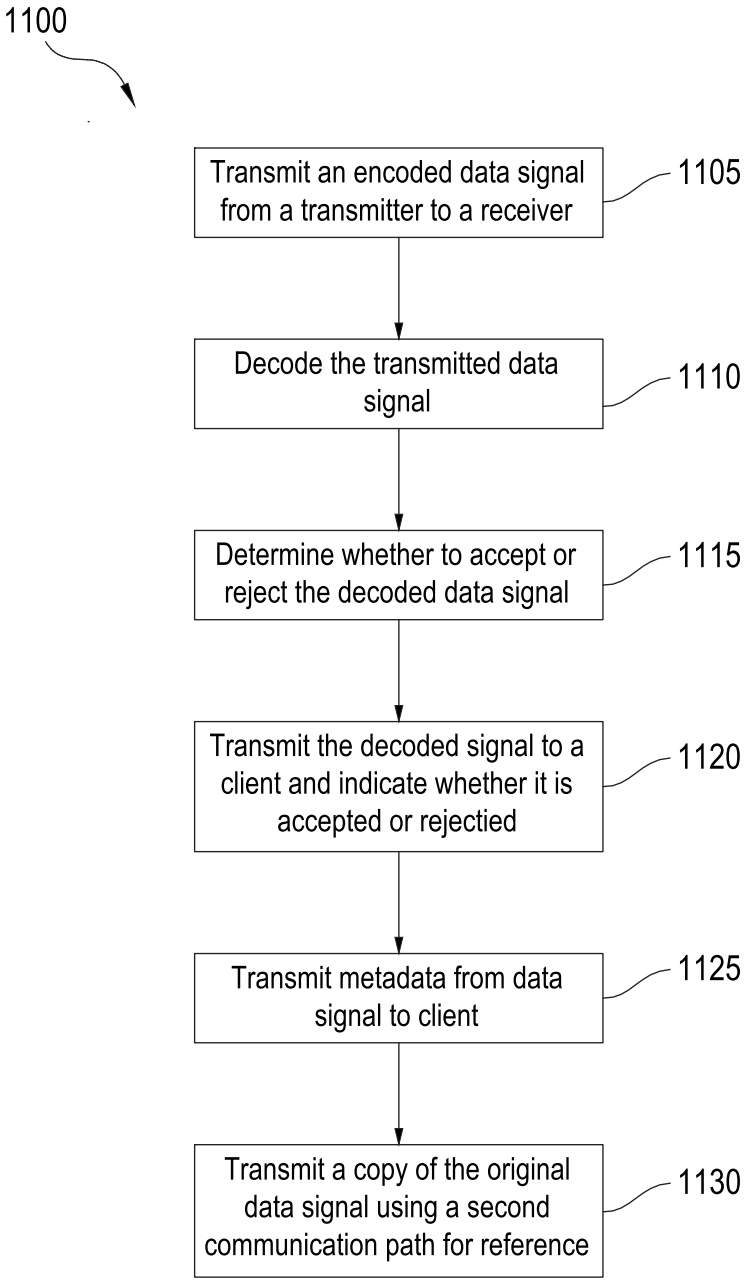
1100
Transmit an encoded data signal from a transmitter to a receiver
1105
Decode the transmitted data signal
1110
Determine whether to accept or reject the decoded data signal
1115
Transmit the decoded signal to a client and indicate whether it is accepted or rejectied
1120
Transmit metadata from data signal to client
1125
Transmit a copy of the original data signal using a second communication path for reference
1130

Fig. 11