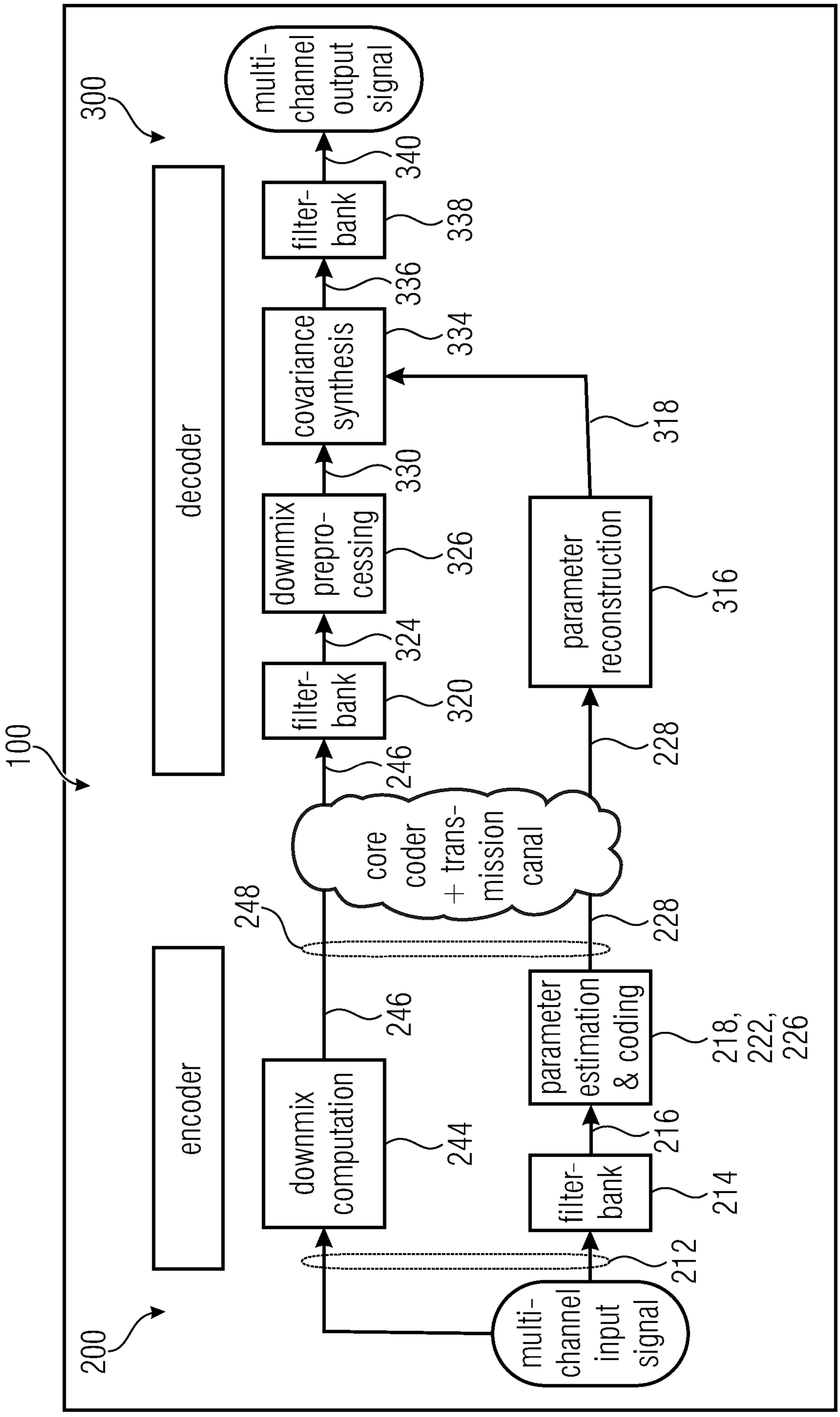

Fig. 1
simplified overview of the whole processing

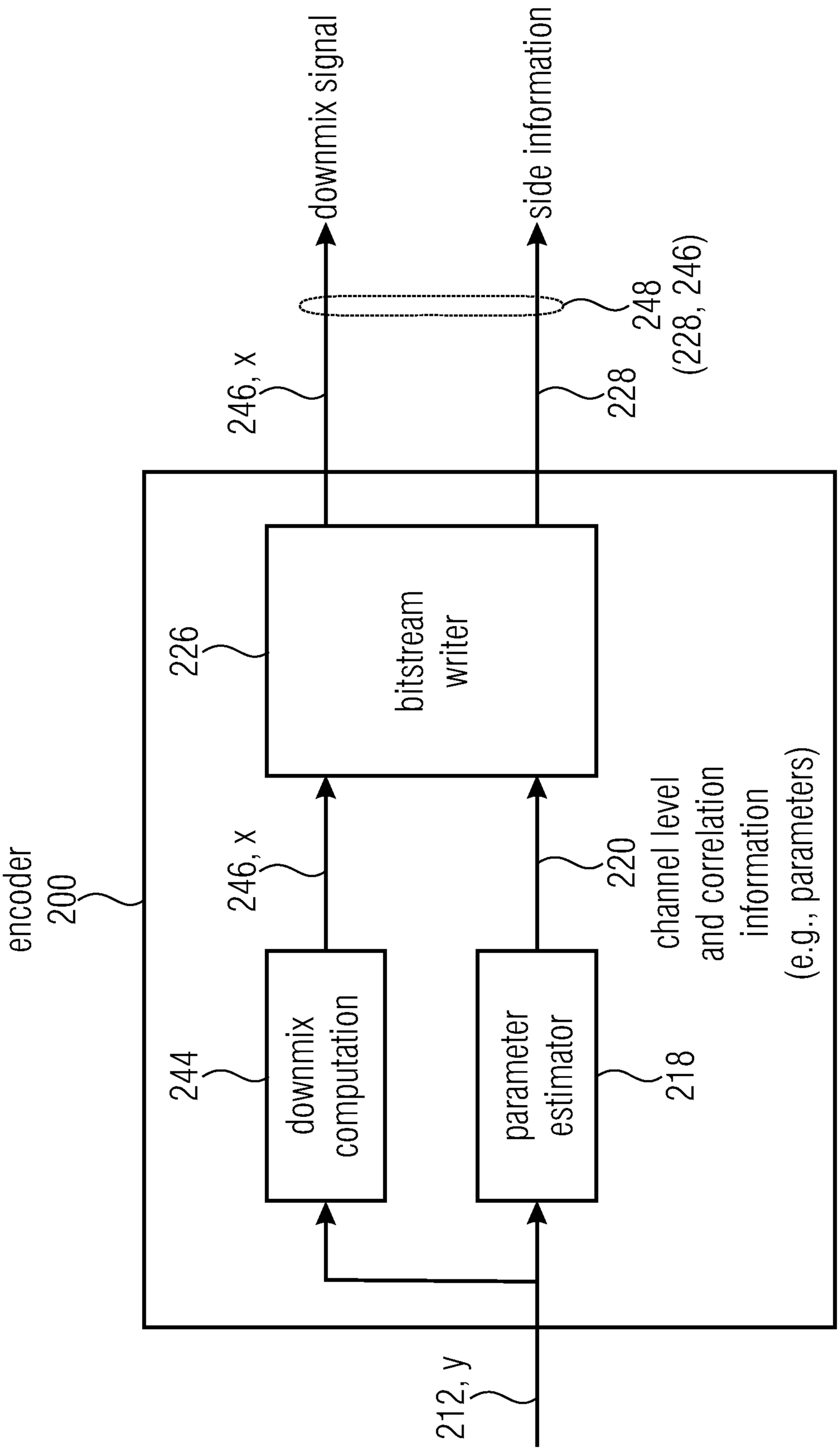
encoder
200
226
downmix signal
246, x
side information
228
248
(228, 246)
bitstream writer
246, x
244
downmix computation
parameter estimator
218
220
channel level and correlation information (e.g., parameters)
212, y

Fig. 2a

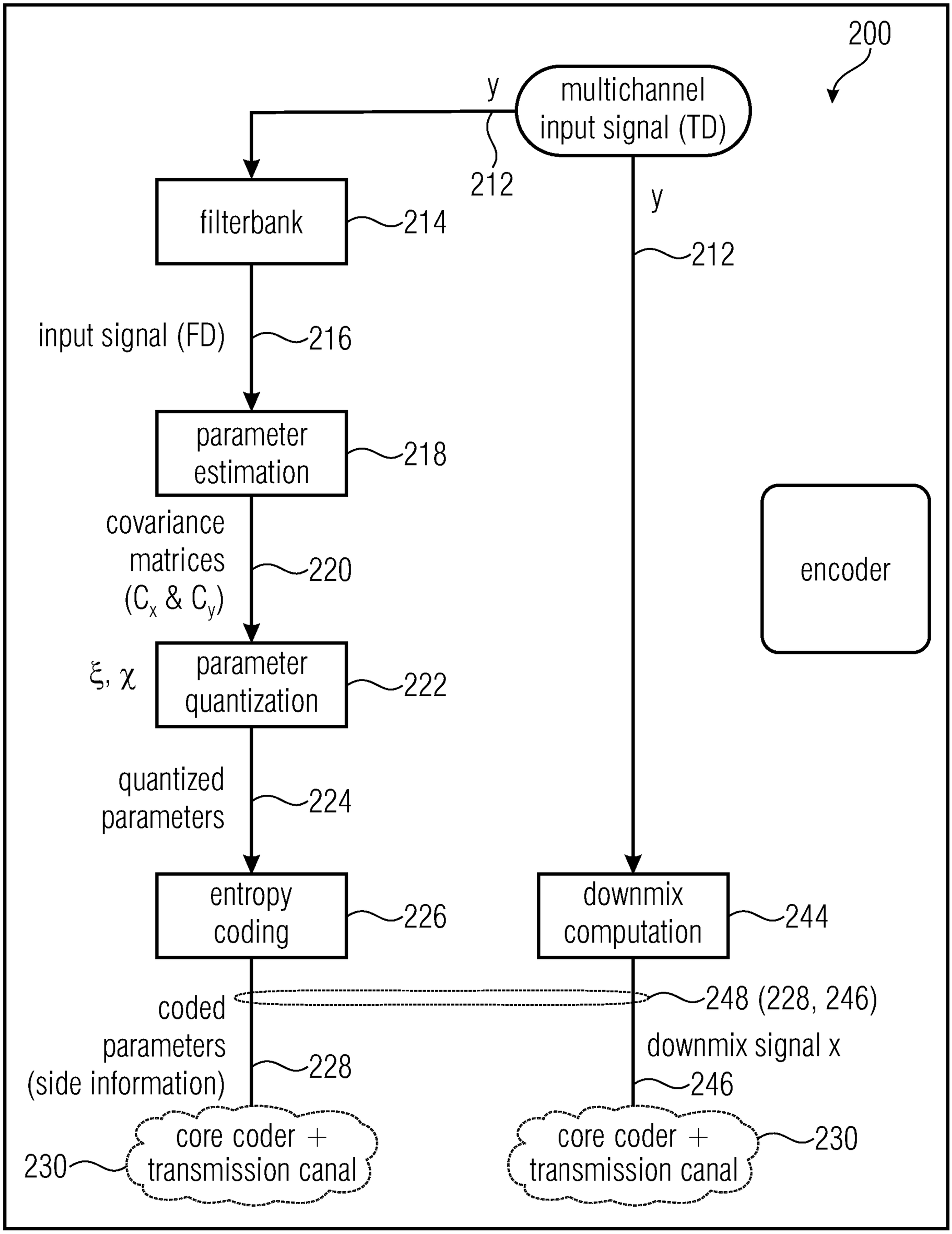

Fig. 2b
detailed overview of encoder

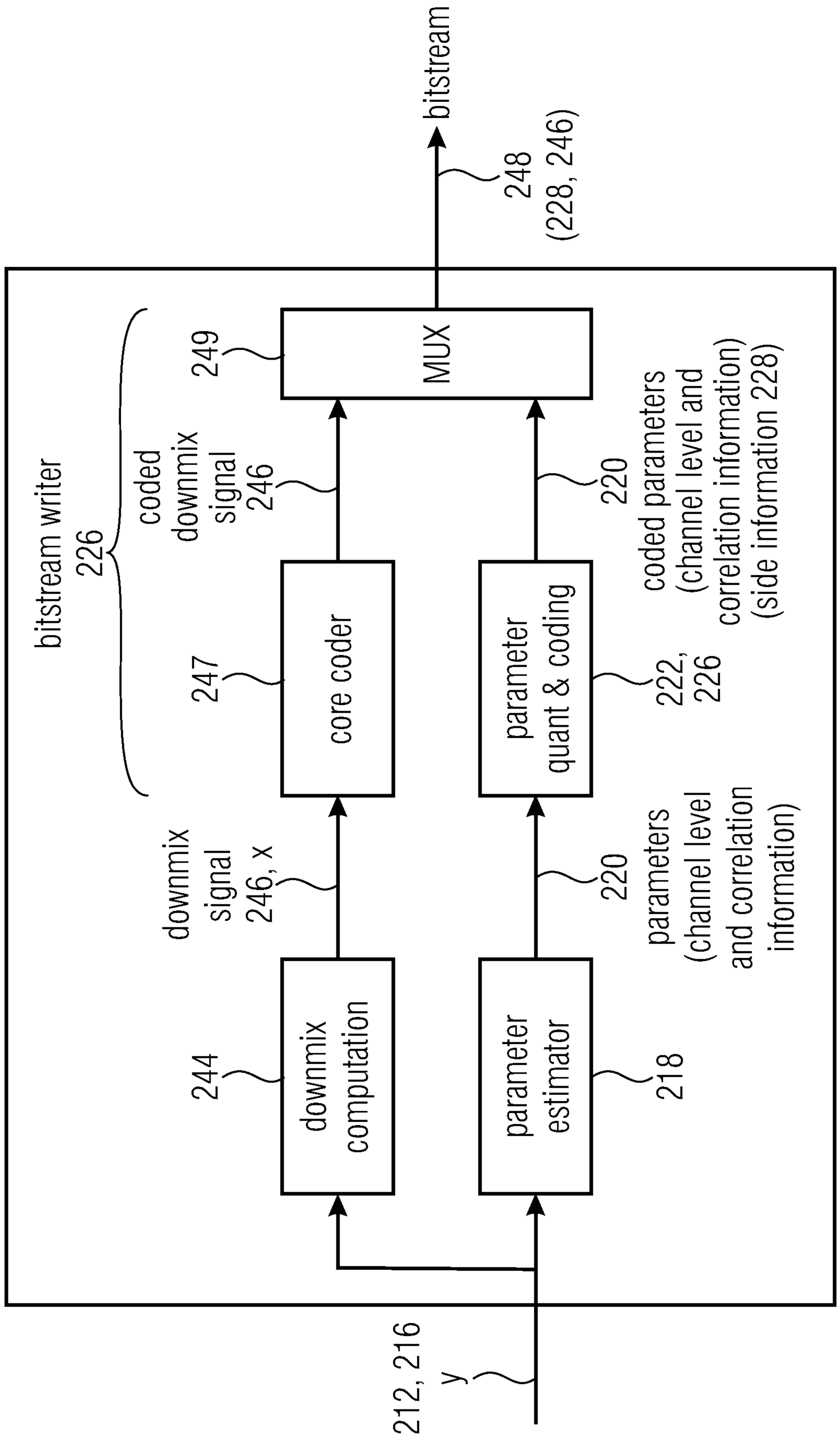
bitstream
248
(228, 246)
bitstream writer
226
coded downmix signal
246
249
MUX
247
core coder
220
coded parameters (channel level and correlation information) (side information 228)
222, 226
downmix signal
246, x
244
downmix computation
parameter estimator
218
parameters (channel level and correlation information)
220
212, 216
y

Fig. 2c

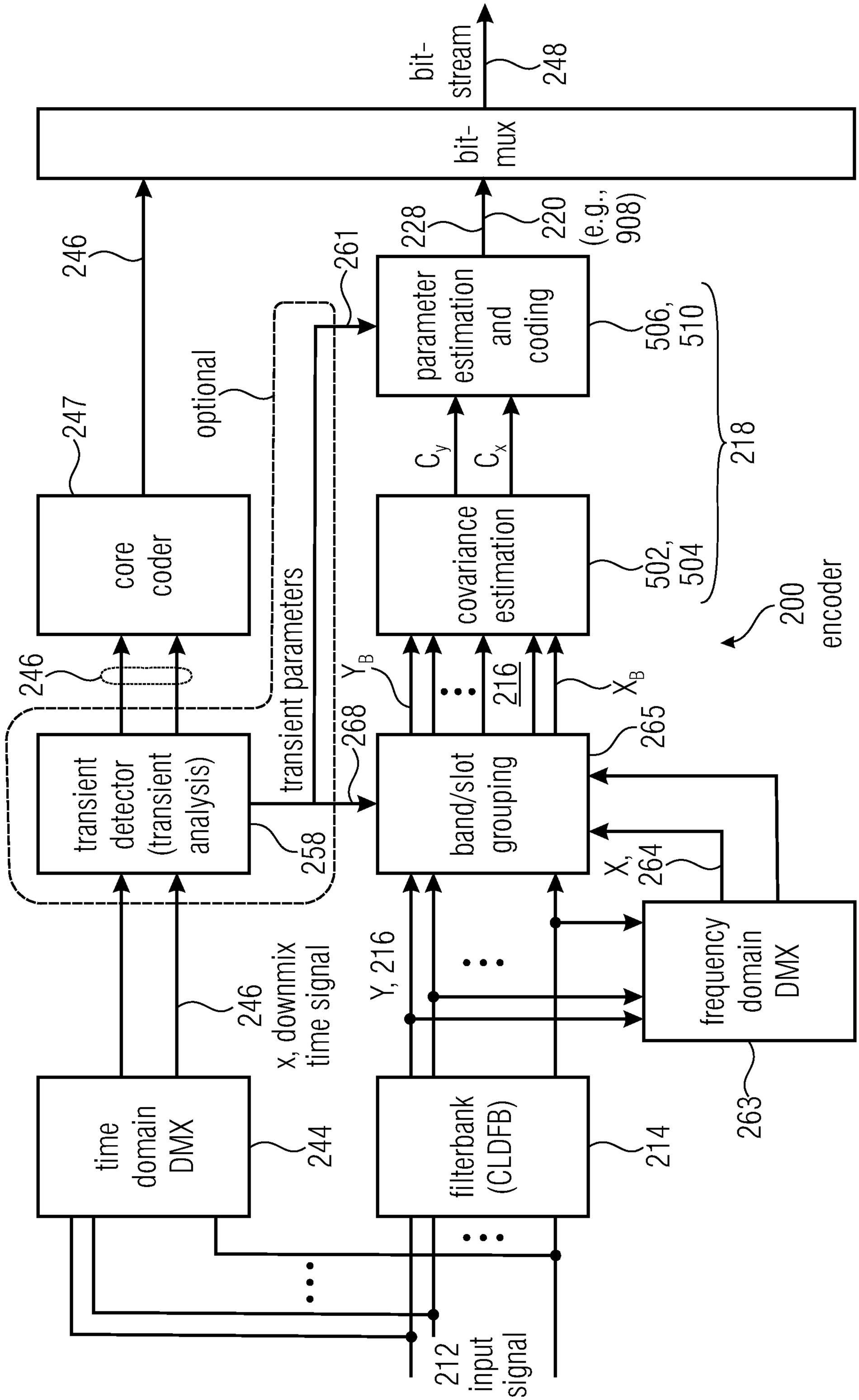
bit-stream
248
bit-mux
246
247
core coder
optional
261
228
220
(e.g., 908)
parameter estimation and coding
506, 510
C_y
C_x
covariance estimation
502, 504
218
200 encoder
246
transient detector (transient analysis)
transient parameters
268
258
Y_B
216
X_B
265
band/slot grouping
X, 264
246 x, downmix time signal
Y, 216
frequency domain DMX
263
time domain DMX
244
filterbank (CLDFB)
214
212 input signal

Fig. 2d

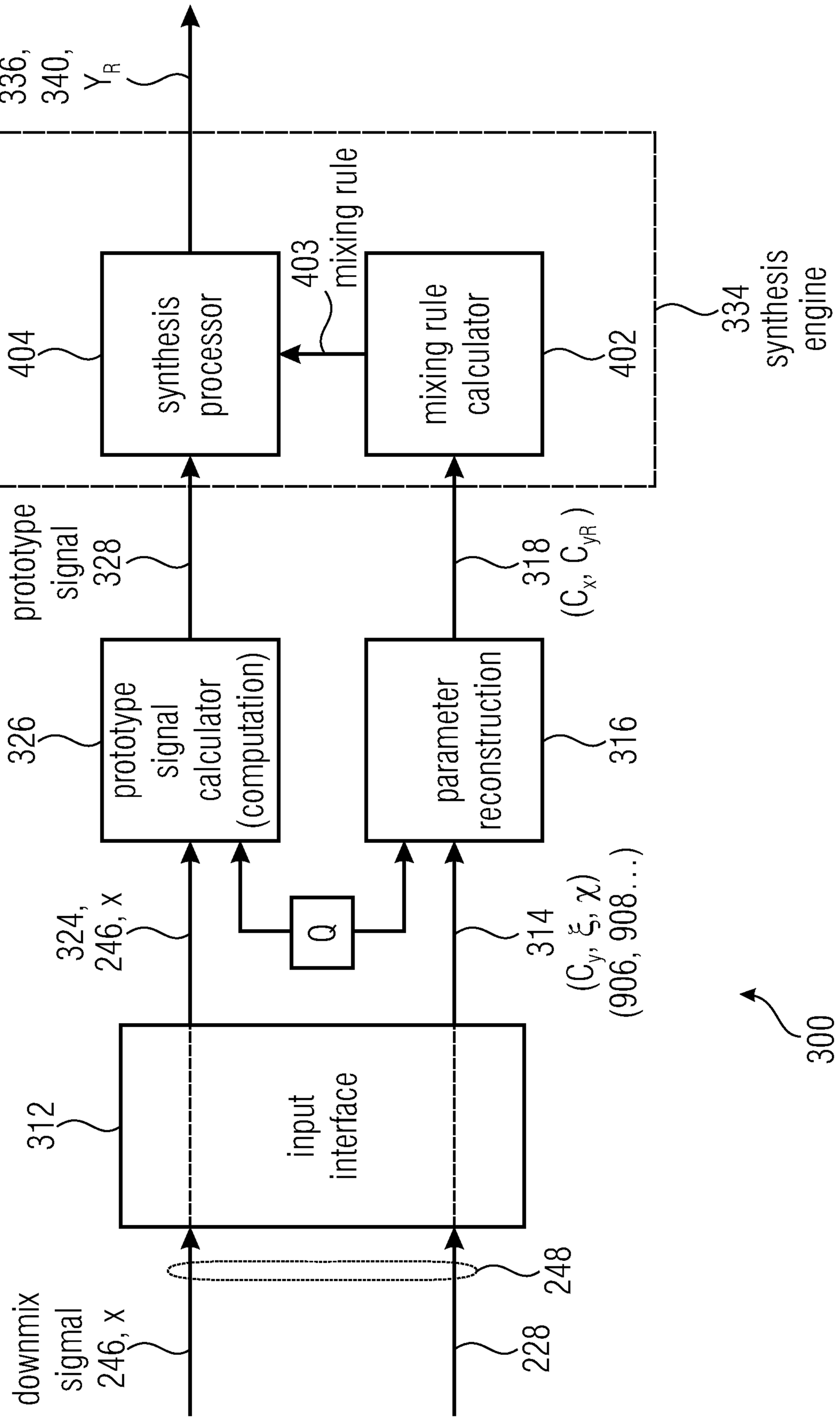
downmix signal 246, x
312
input interface
248
228
324, 246, x
326
prototype signal calculator (computation)
Q
314
(C_y, ξ, χ) (906, 908...)
316
parameter reconstruction
318 (C_x, C_{yR})
prototype signal 328
404
synthesis processor
403
mixing rule
402
mixing rule calculator
334
synthesis engine
336, 340, Y_R
300

Fig. 3a

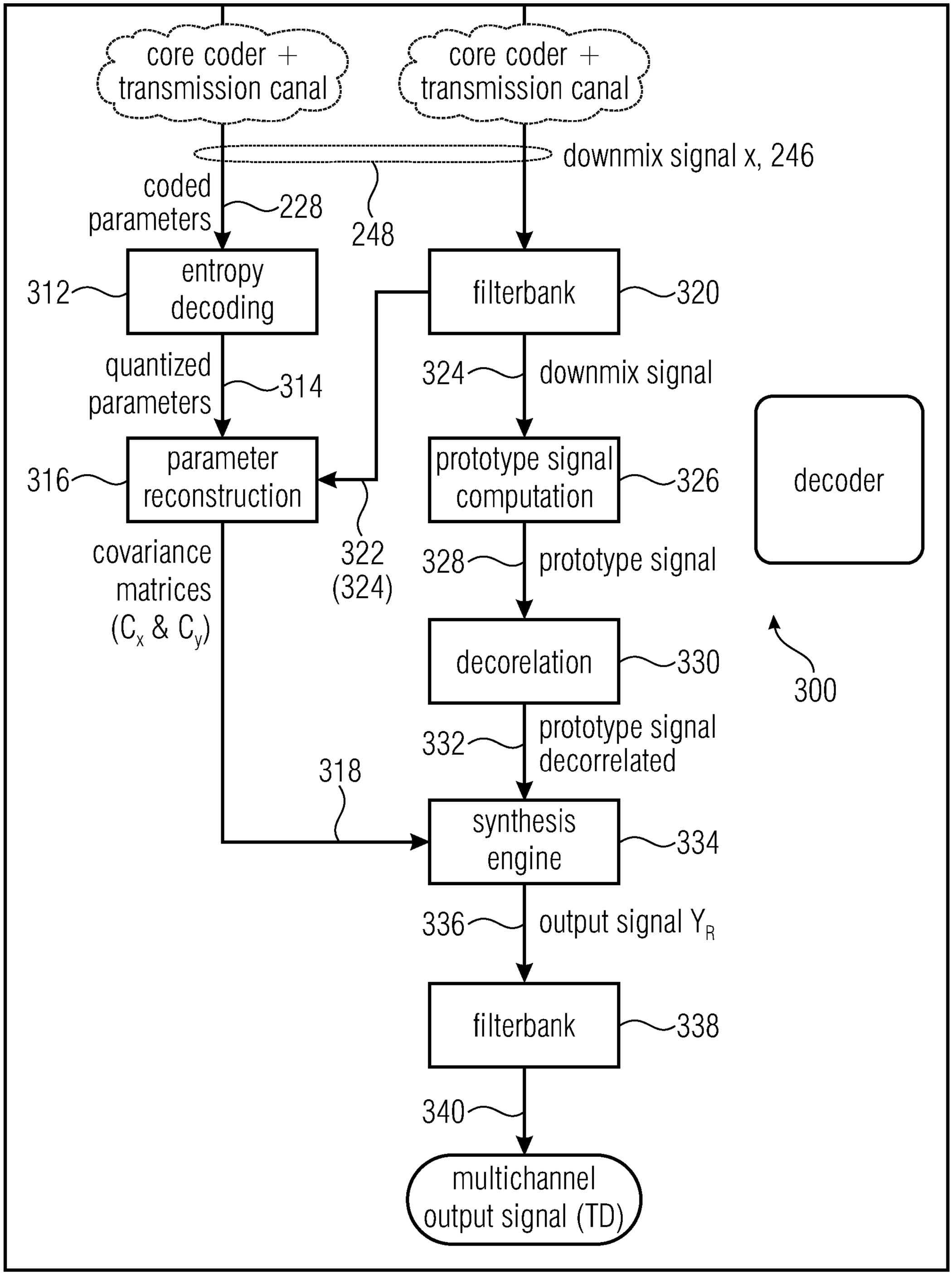

Fig. 3b
overview of decoder modules

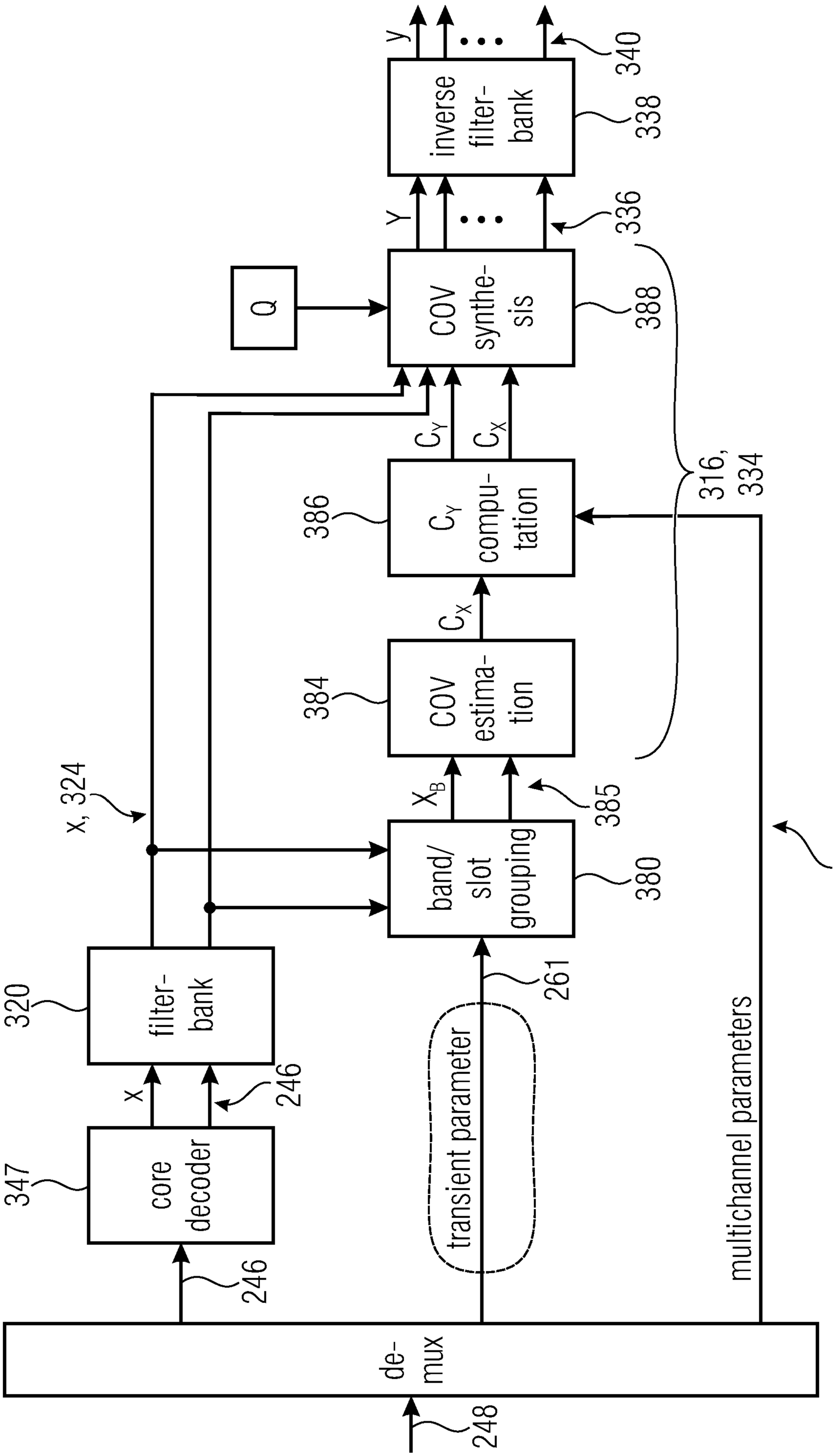
y
340
inverse filter-bank
338
Y
336
Q
COV synthe-sis
388
316, 334
C_Y
C_X
386
C_Y compu-tation
C_X
384
COV estima-tion
X_B
385
x, 324
band/ slot grouping
380
320
filter-bank
261
300 decoder
x
246
transient parameter
multichannel parameters
347
core decoder
246
de-mux
248

Fig. 3c

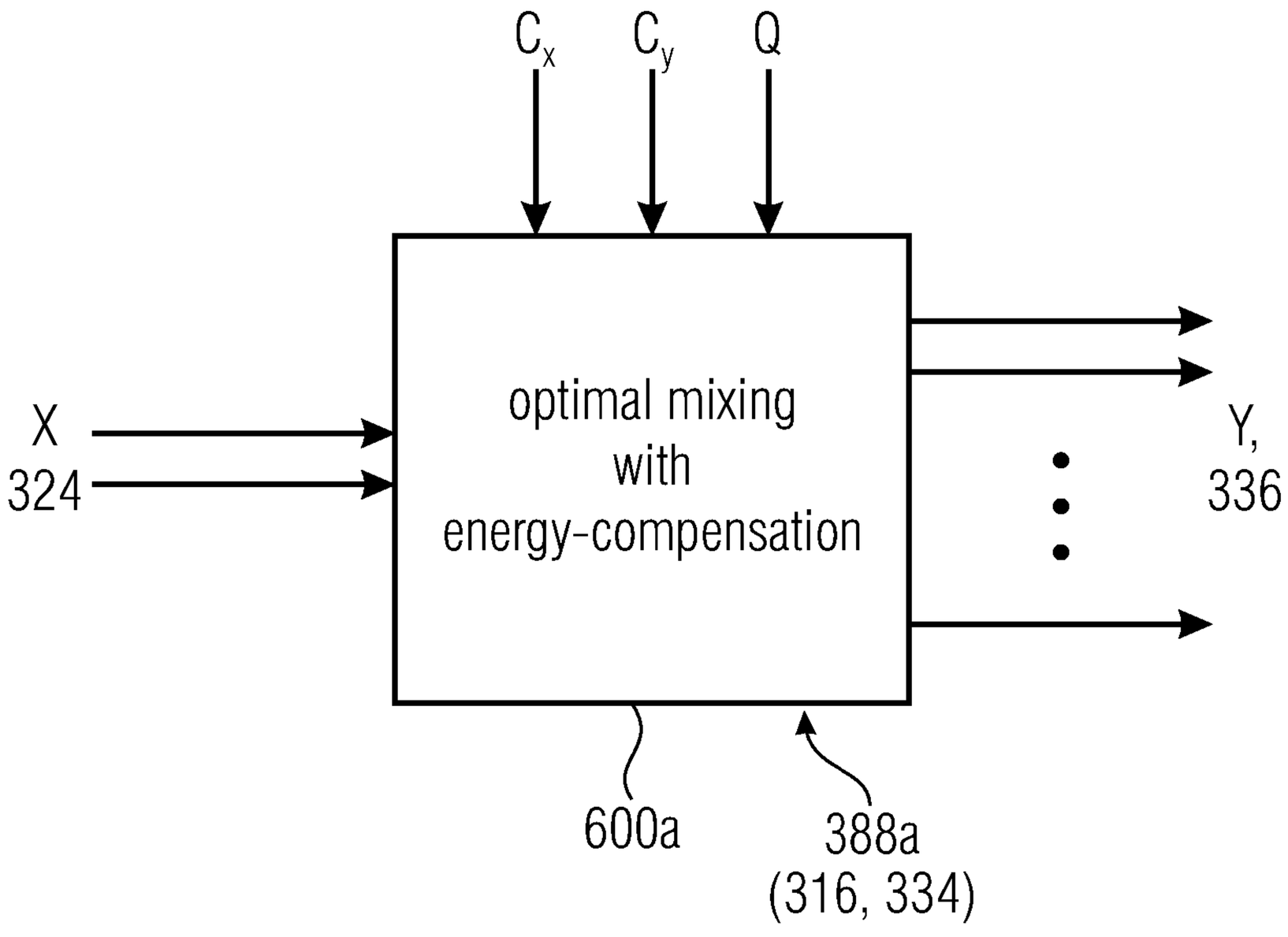
C_x
C_y
Q
X
324
optimal mixing
with
energy-compensation
Y,
336
600a
388a
(316, 334)

Fig. 4a

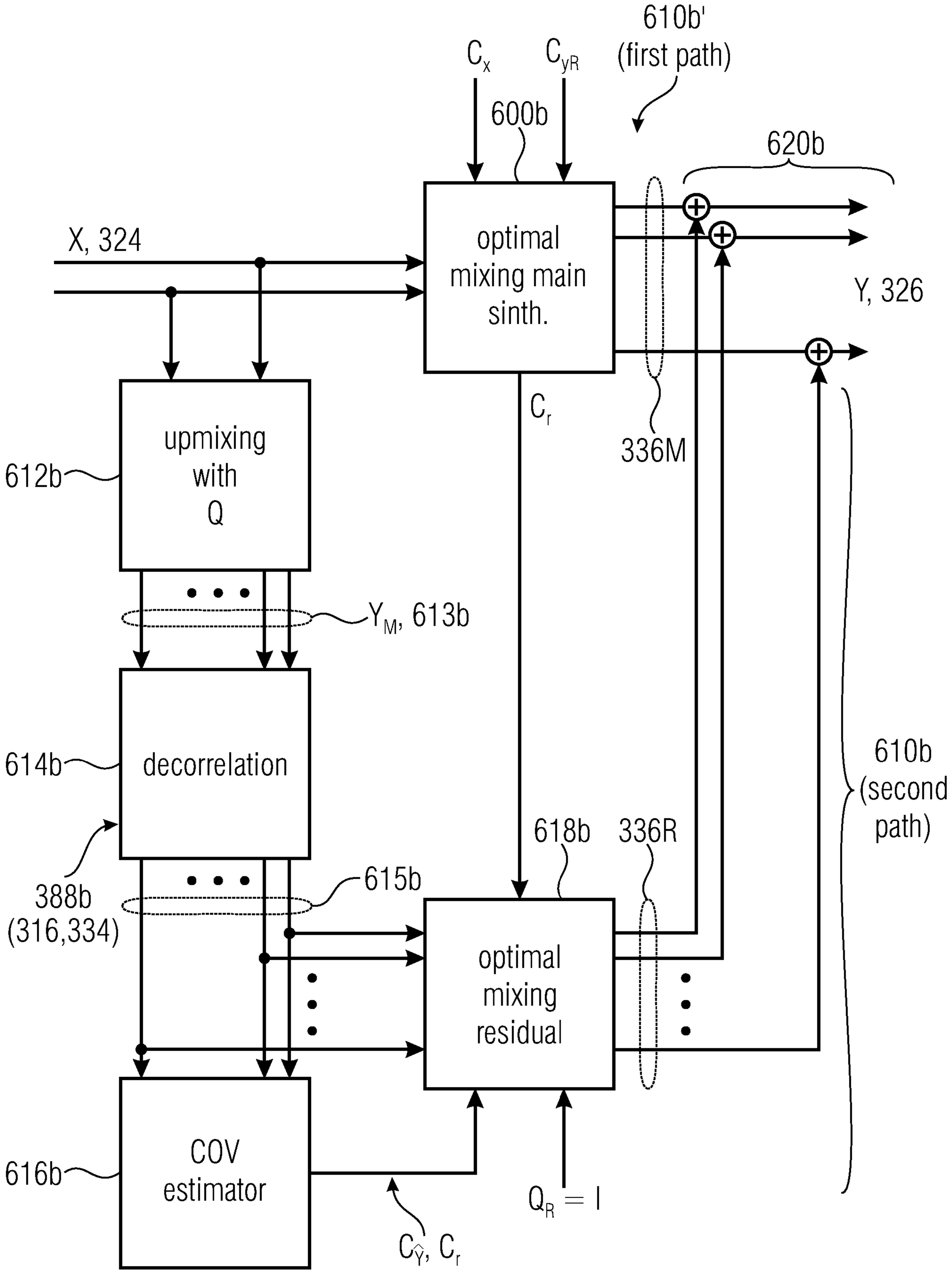
610b'
(first path)
C_x
C_{yR}
600b
620b
X, 324
optimal mixing main sinth.
Y, 326
C_r
336M
upmixing with Q
612b
Y_M, 613b
decorrelation
614b
388b
(316,334)
615b
618b
336R
optimal mixing residual
610b
(second path)
COV estimator
616b
$C_{\hat{Y}}$, C_r
$Q_R = I$

Fig. 4b

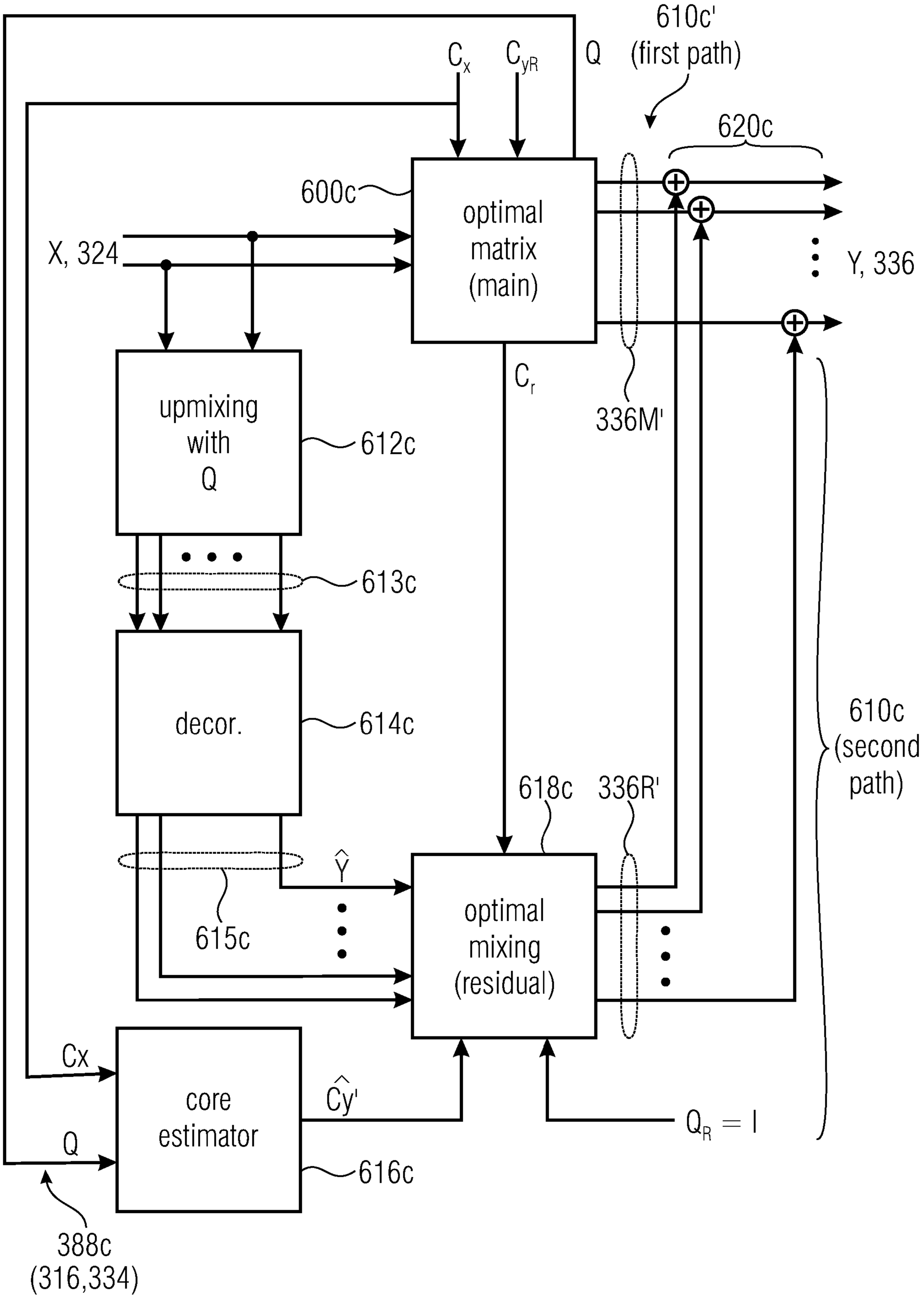
610c'
(first path)
C_x
C_{yR}
Q
620c
600c
optimal
matrix
(main)
X, 324
Y, 336
upmixing
with
Q
612c
613c
C_r
336M'
decor.
614c
610c
(second
path)
618c
336R'
$\hat{Y}$
615c
optimal
mixing
(residual)
Cx
core
estimator
$\hat{Cy}'$
$Q_R = 1$
Q
616c
388c
(316,334)

Fig. 4c

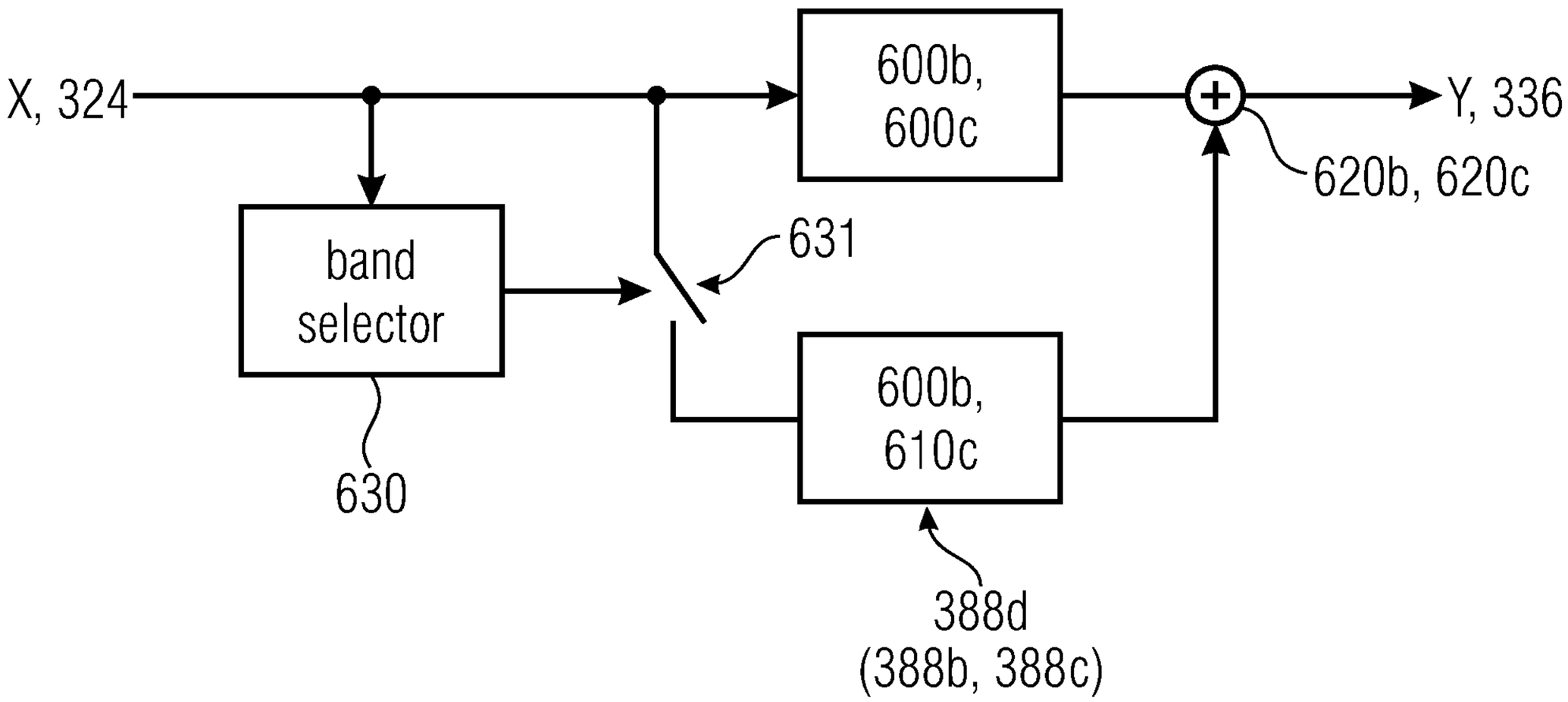
X, 324
600b, 600c
Y, 336
620b, 620c
band selector
631
630
600b, 610c
388d (388b, 388c)

Fig. 4d

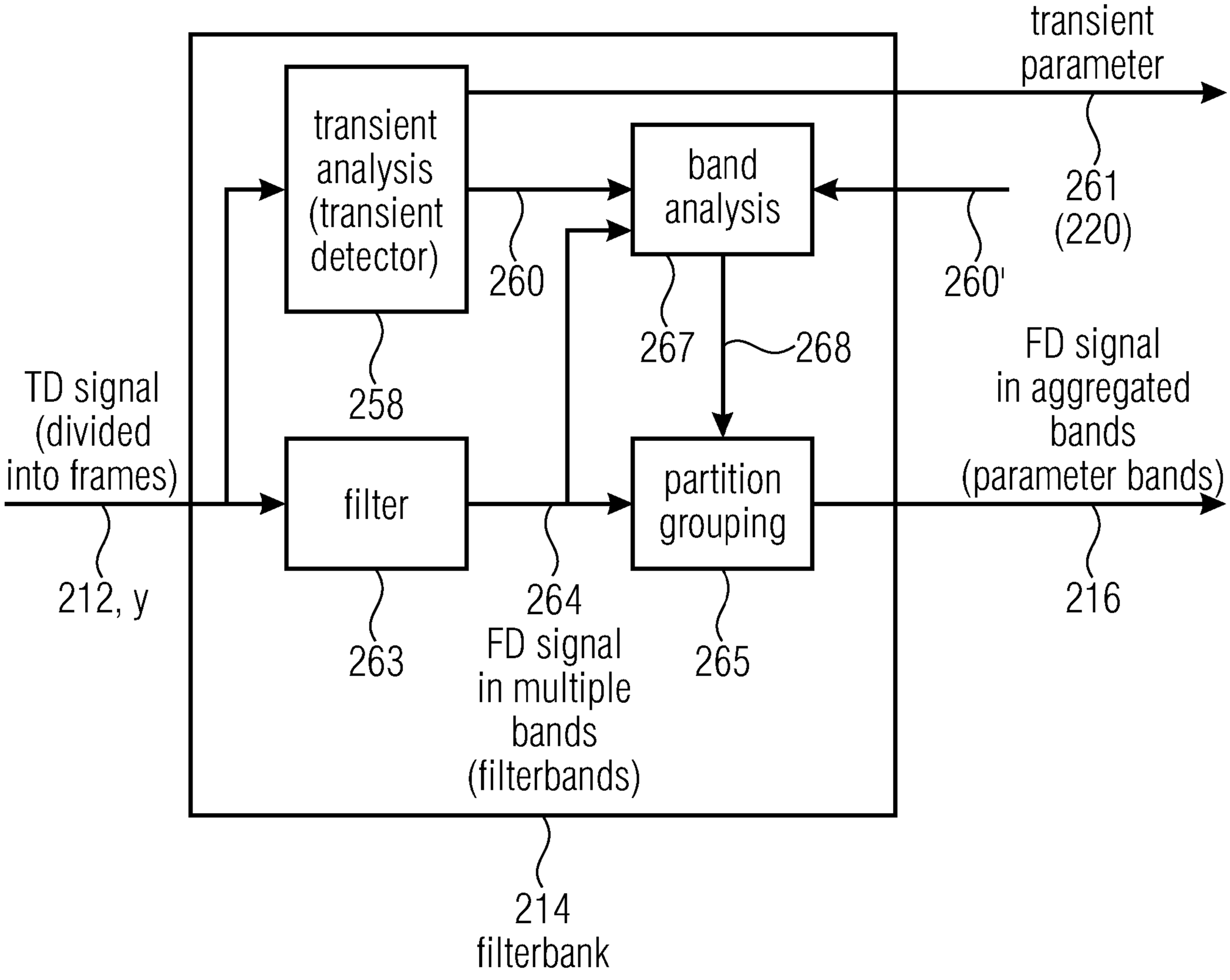
transient parameter
transient analysis (transient detector)
band analysis
261 (220)
260
260'
258
267
268
TD signal (divided into frames)
filter
partition grouping
FD signal in aggregated bands (parameter bands)
212, y
263
264 FD signal in multiple bands (filterbands)
265
216
214 filterbank

Fig. 5

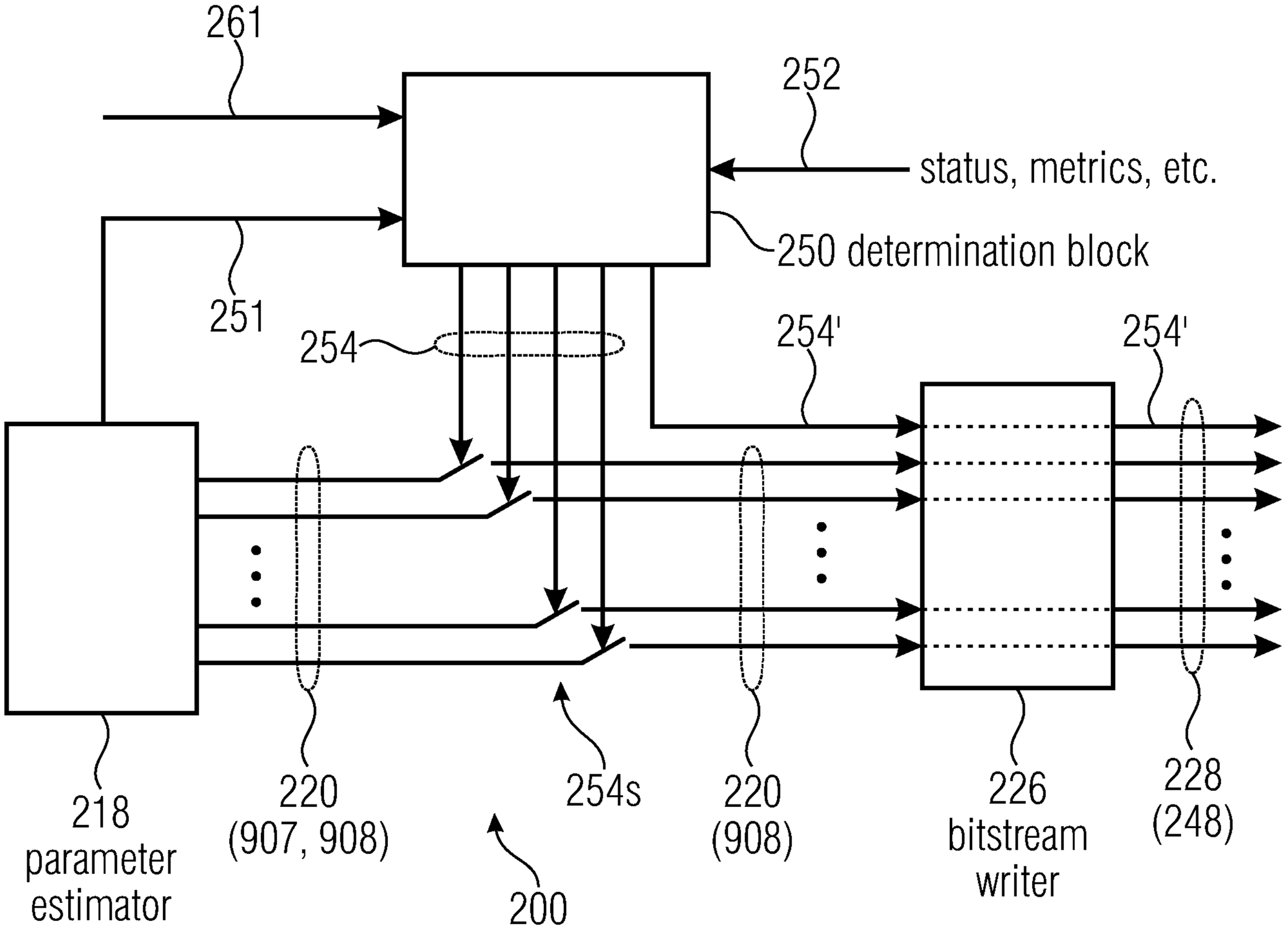
261
252
status, metrics, etc.
250 determination block
251
254
254'
254'
218
parameter
estimator
220
(907, 908)
254s
220
(908)
226
bitstream
writer
228
(248)
200

Fig. 6a

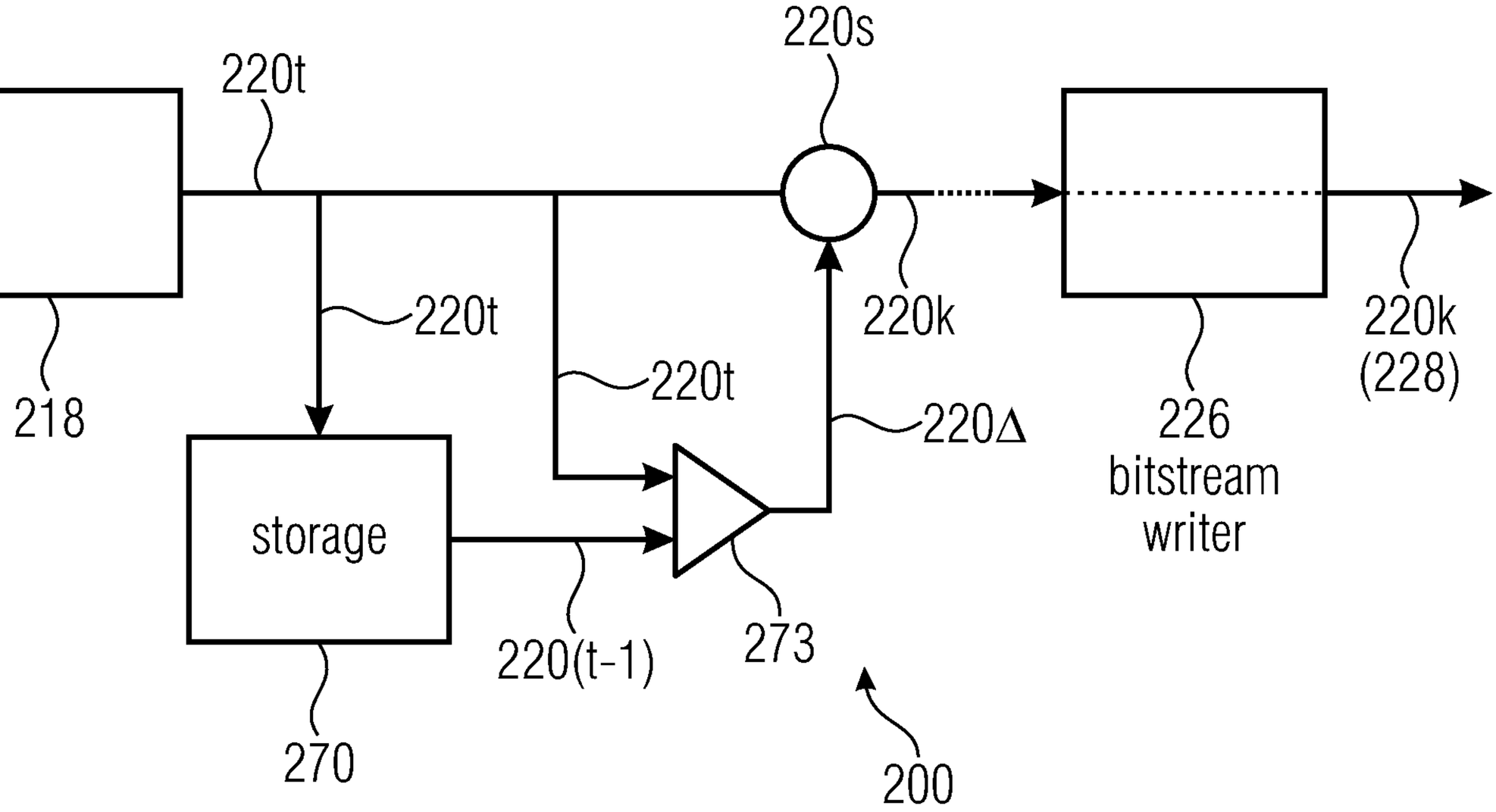
220s
220t
220t
220t
220k
220k
(228)
220Δ
218
226
bitstream
writer
storage
220(t-1)
273
270
200

Fig. 6b

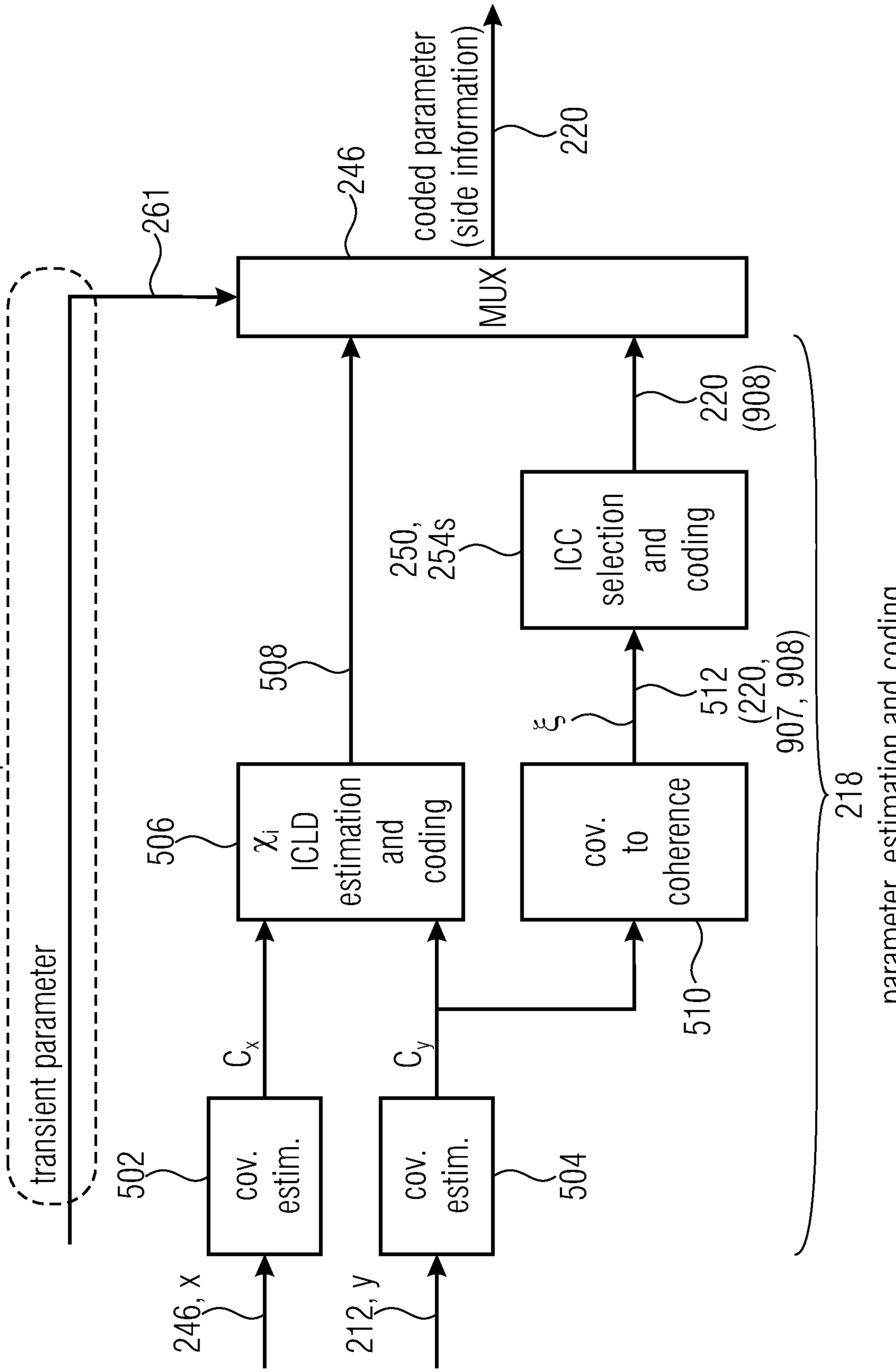
optional
transient parameter
261
246
coded parameter (side information)
220
MUX
250, 254s
ICC selection and coding
220 (908)
508
506
χ_i ICLD estimation and coding
C_x
C_y
ξ
512 (220, 907, 908)
cov. to coherence
510
218
parameter, estimation and coding
502
cov. estim.
504
cov. estim.
246, x
212, y

Fig. 6c

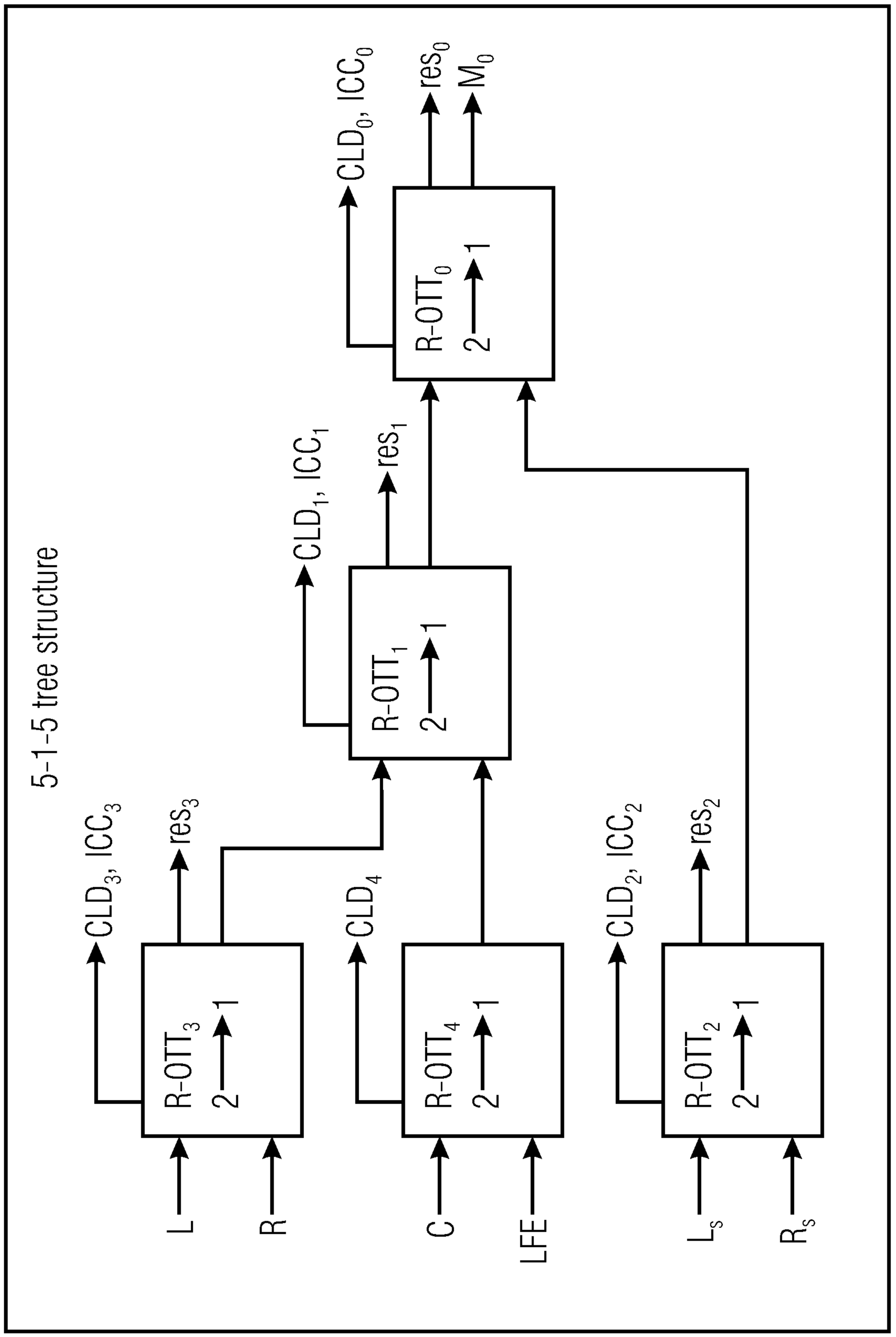

Fig. 7
(PRIOR ART)

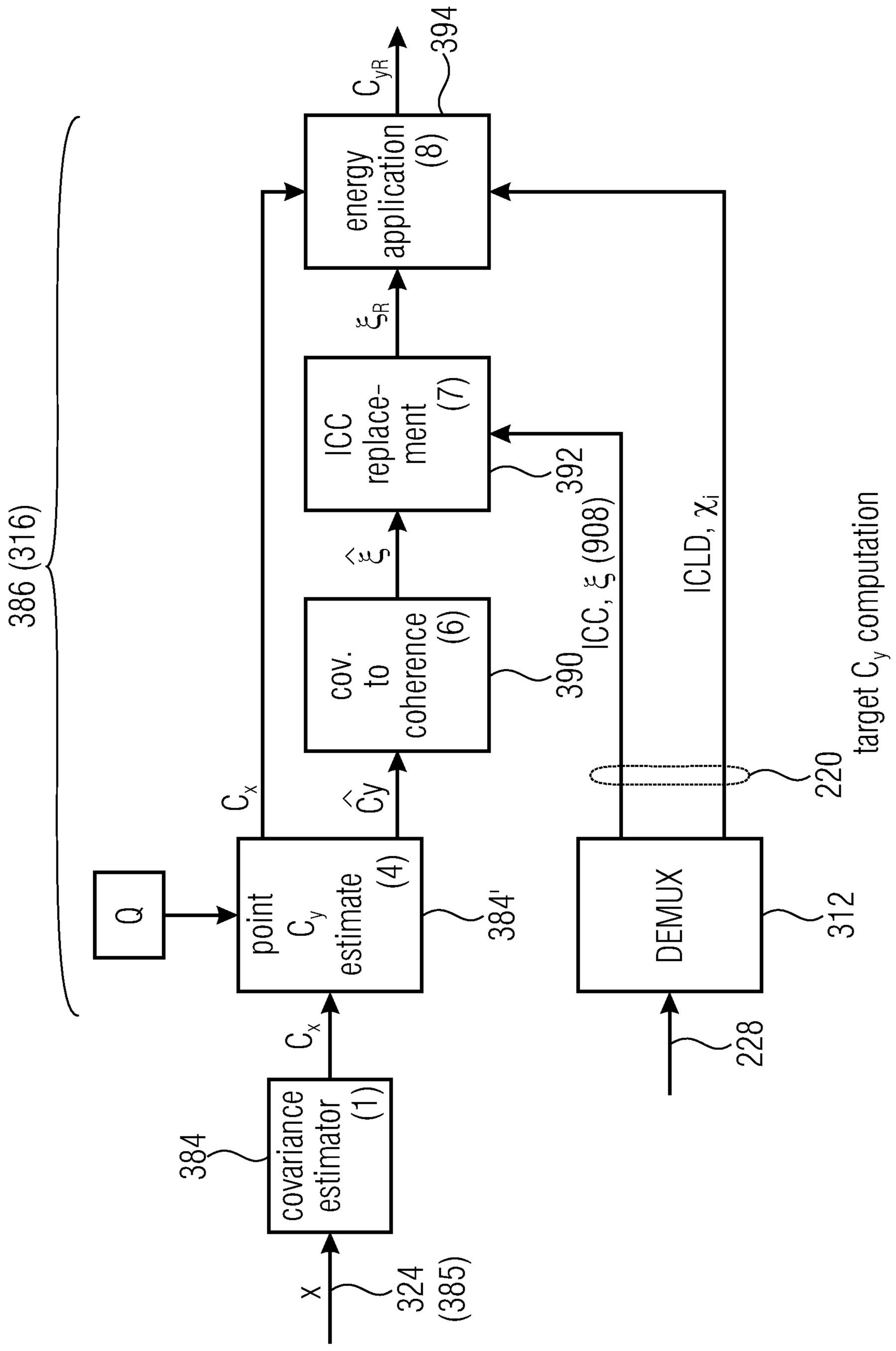
386 (316)
Q
point C_y estimate (4)
384'
C_x
covariance estimator (1)
384
X
324 (385)
$\hat{C}y$
cov. to coherence (6)
390
$\hat{\xi}$
ICC replace-ment (7)
392
ξ_R
energy application (8)
394
C_{yR}
ICC, ξ (908)
ICLD, χ_i
DEMUX
312
228
220
target C_y computation

Fig. 8a

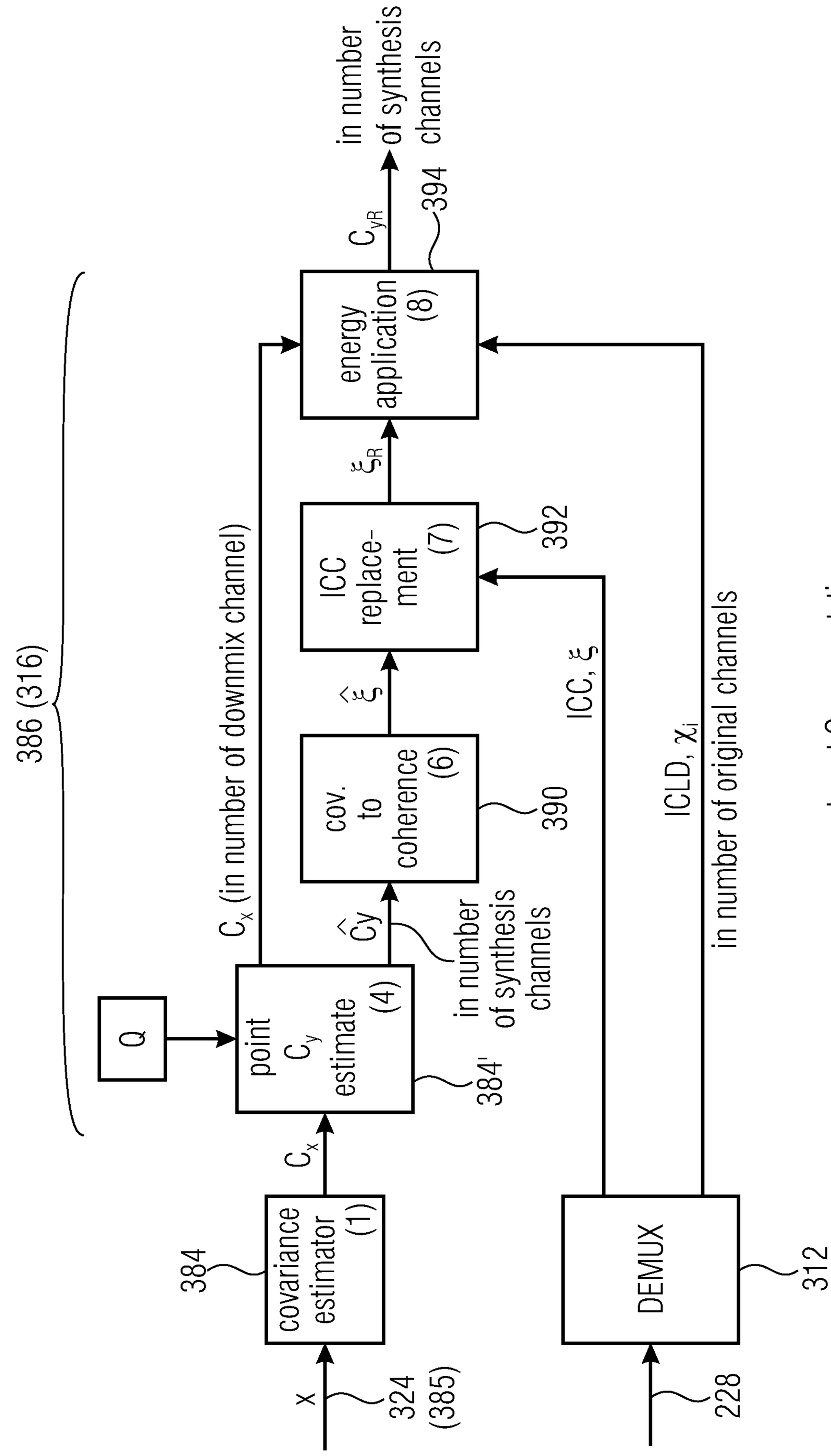
386 (316)
Q
point C_y estimate (4)
384'
C_x (in number of downmix channel)
in number of synthesis channels
$\hat{C}y$
cov. to coherence (6)
390
$\hat{\xi}$
ICC, ξ_i
ICC replace-ment (7)
392
ξ_R
energy application (8)
C_{yR}
394
in number of synthesis channels
ICLD, χ_i
in number of original channels
target C_y computation
DEMUX
312
228
C_x
covariance estimator (1)
384
x
324
(385)

Fig. 8b

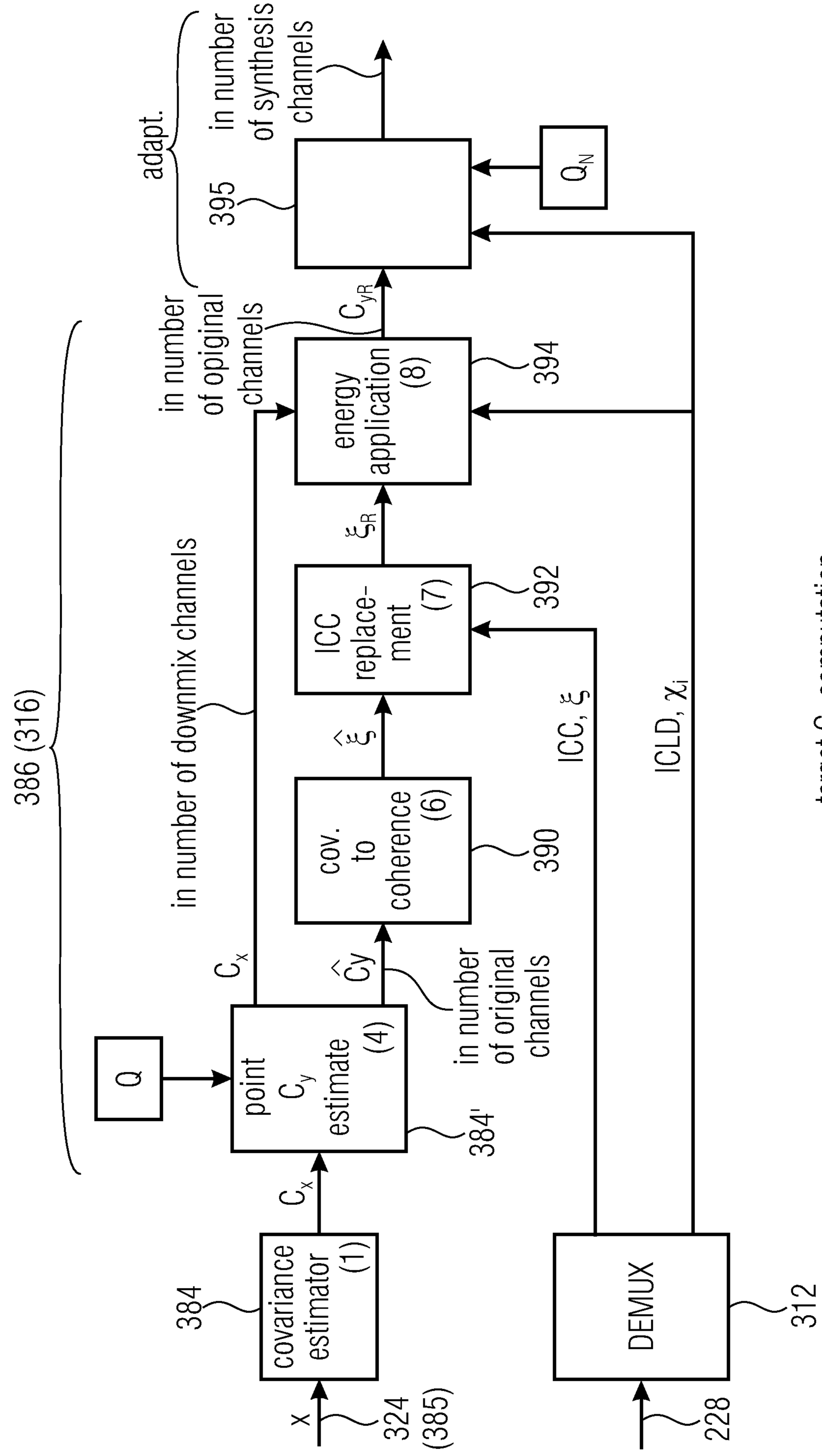
386 (316)
adapt.
in number of synthesis channels
395
Q_N
in number of opiginal channels
C_{yR}
energy application (8)
394
ξ_R
ICC replace-ment (7)
392
in number of downmix channels
C_x
$\hat{C}y$
cov. to coherence (6)
$\hat{\xi}$
390
ICC, ξ
ICLD, χ_i
target C_y computation
Q
point C_y estimate (4)
384'
in number of original channels
C_x
covariance estimator (1)
384
x
324 (385)
DEMUX
312
228

Fig. 8c

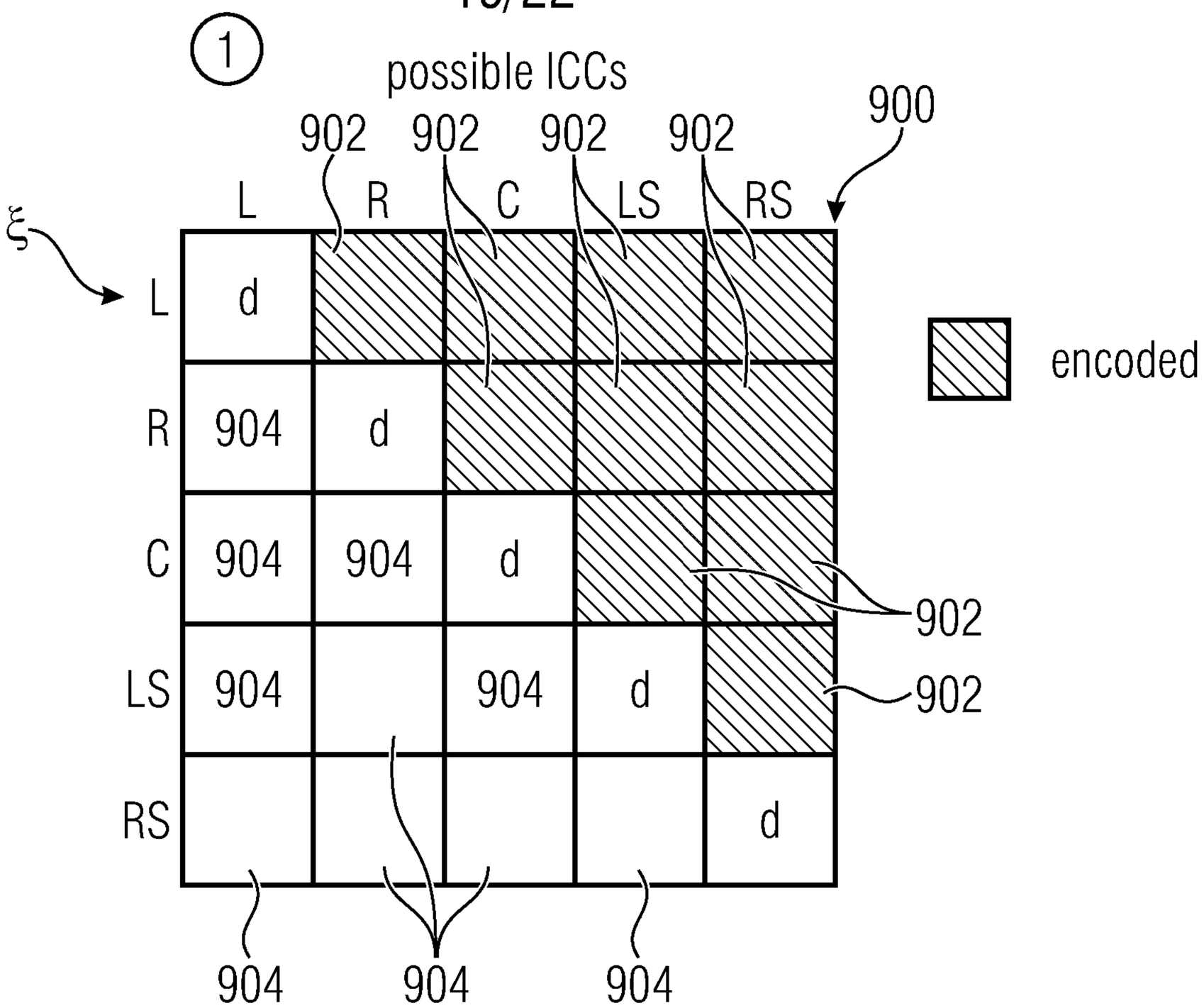
1
possible ICCs
902
902
902
902
900
L
R
C
LS
RS
ξ
L
R
C
LS
RS
d
904
d
904
904
d
904
d
d
902
902
904
904
904
encoded

Fig. 9a

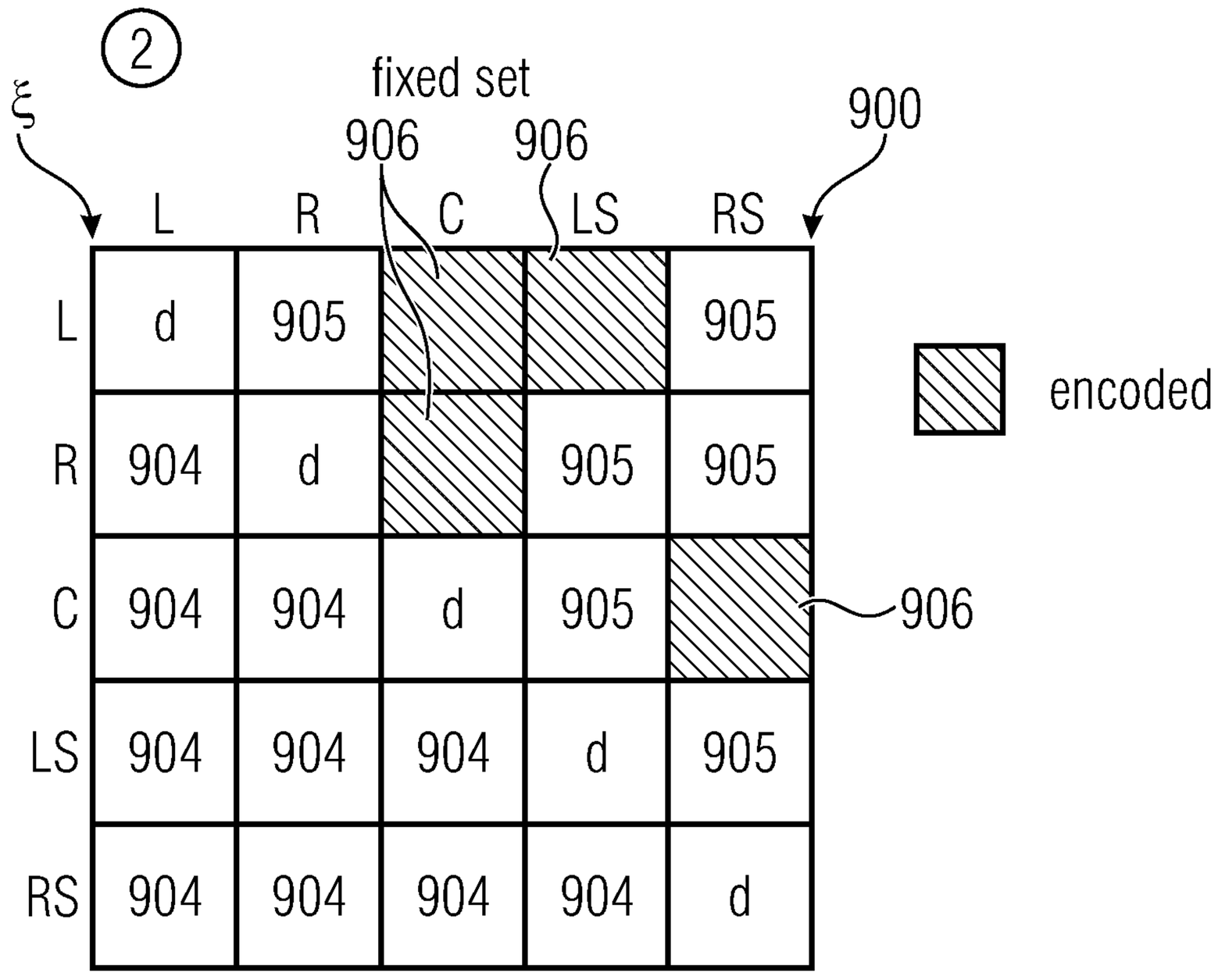
2
fixed set
906
906
900
ξ
L
R
C
LS
RS
L
R
C
LS
RS
d
905
905
904
d
905
905
904
904
d
905
906
904
904
904
d
905
904
904
904
904
d
encoded

Fig. 9b

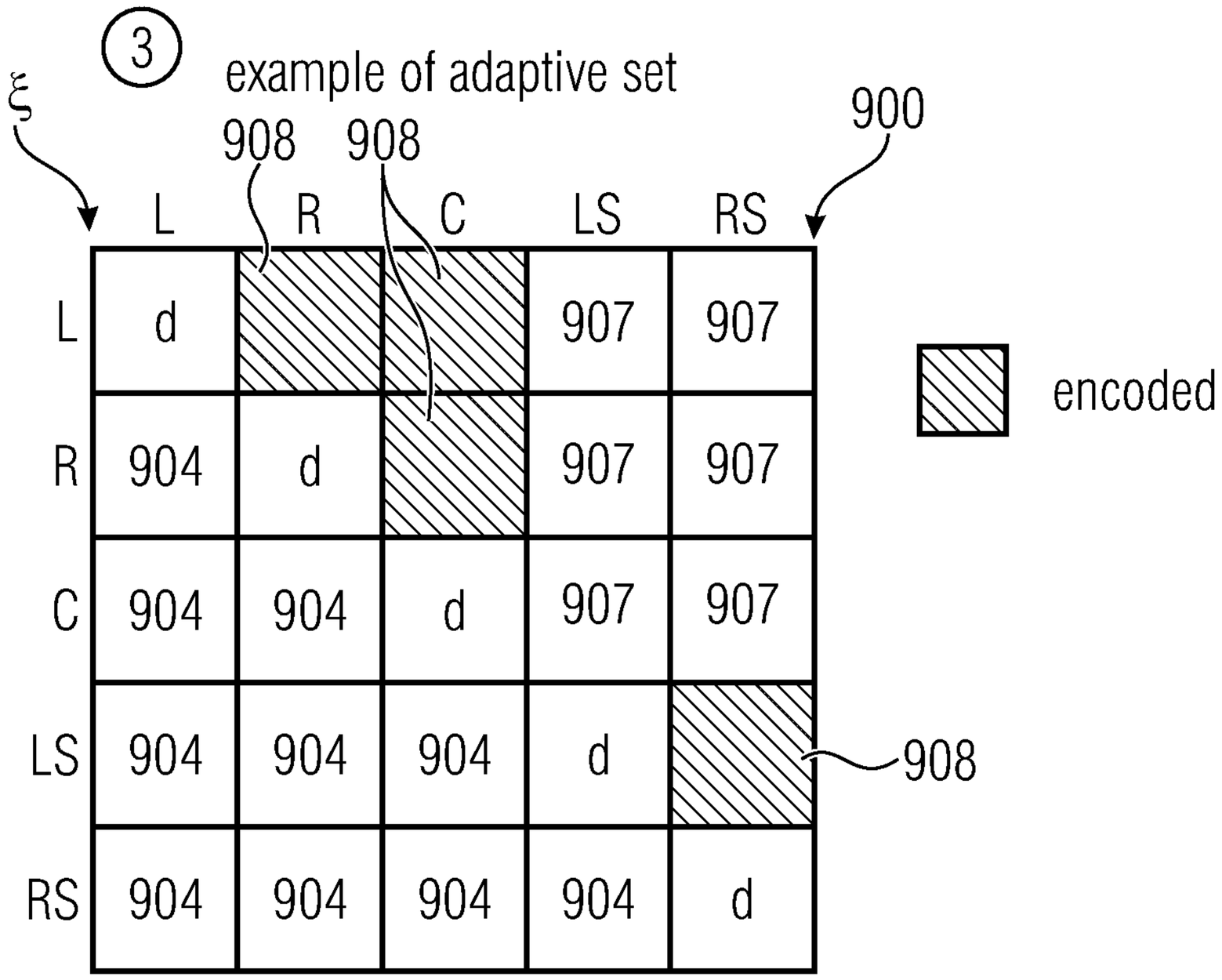
3
example of adaptive set
ξ
908
908
900
L
R
C
LS
RS
L
d
907
907
R
904
d
907
907
C
904
904
d
907
907
LS
904
904
904
d
908
RS
904
904
904
904
d
encoded

Fig. 9c

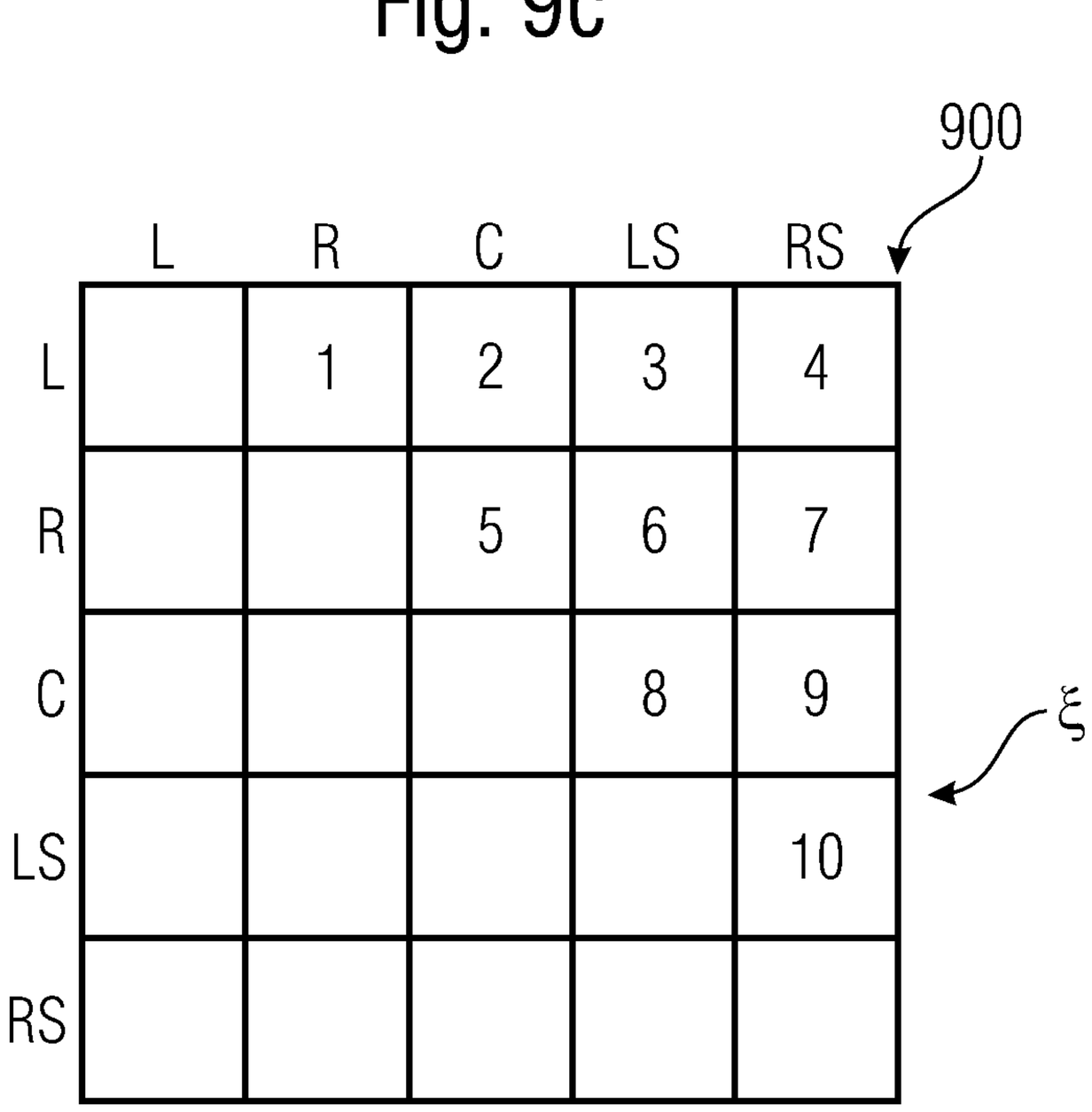
900
L
R
C
LS
RS
L
1
2
3
4
R
5
6
7
C
8
9
ξ
LS
10
RS
indexes of all possible ICCs

Fig. 9d

SUBSTITUTE SHEET (RULE 26)

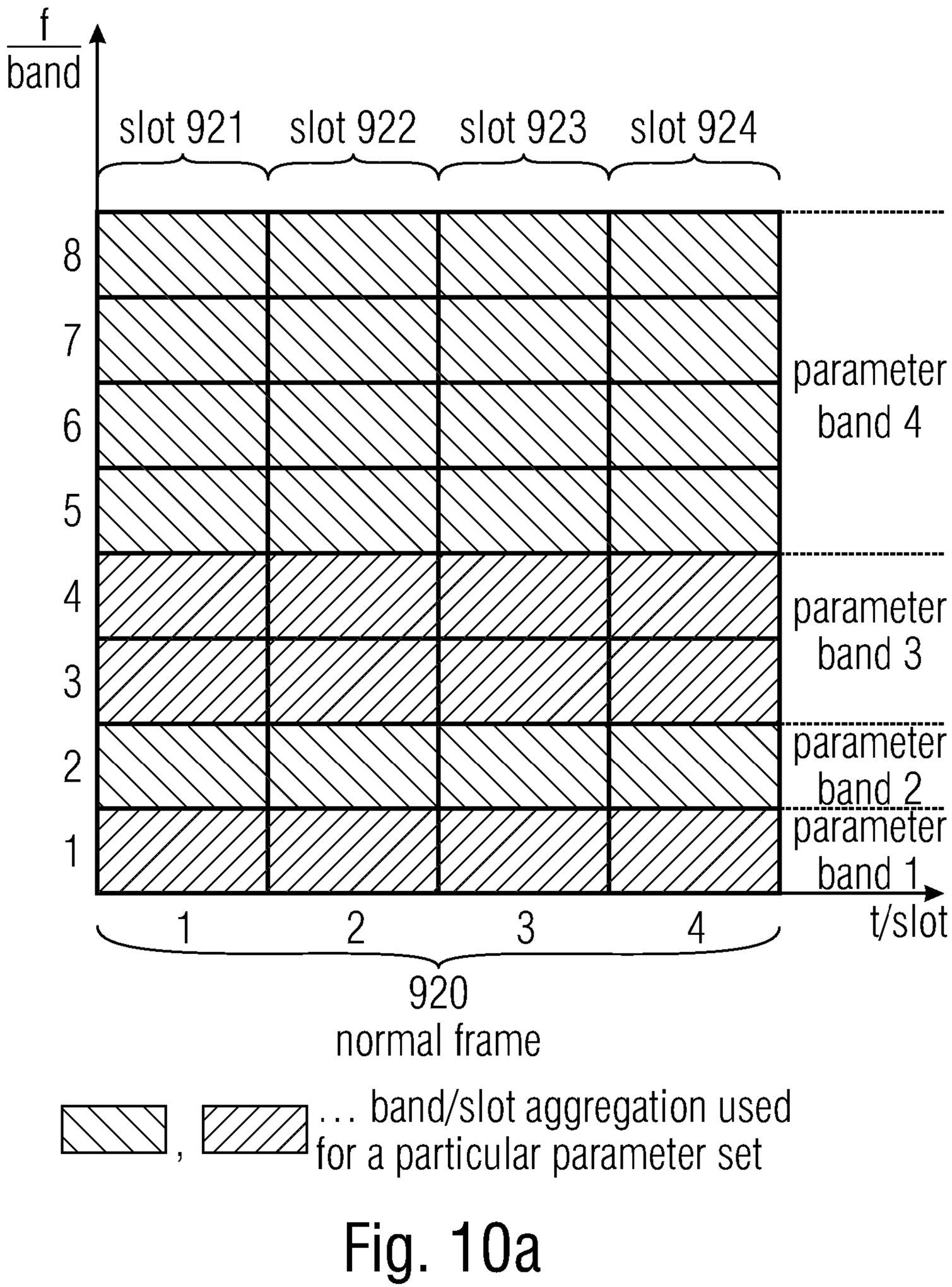

Fig. 10a

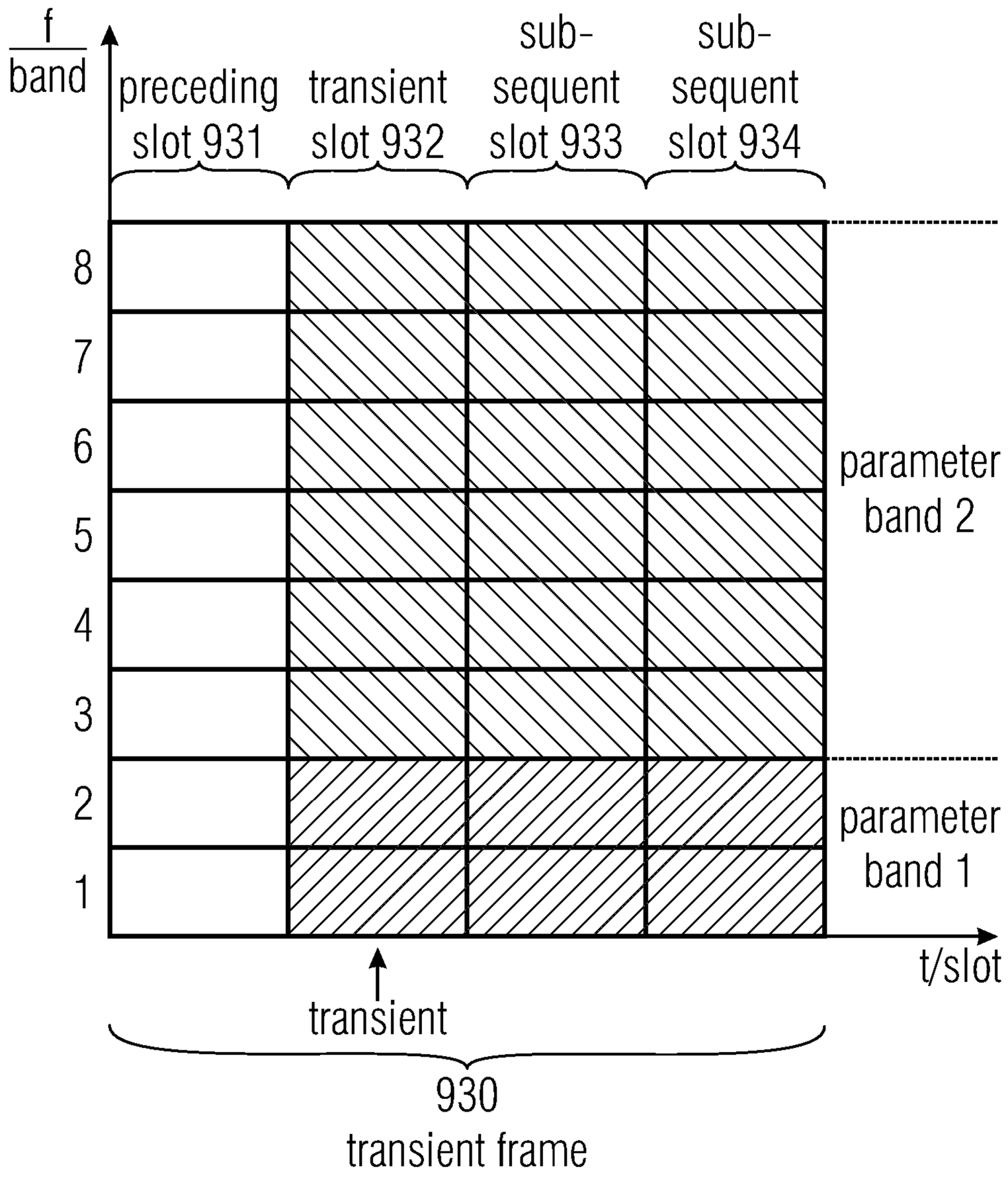

Fig. 10b

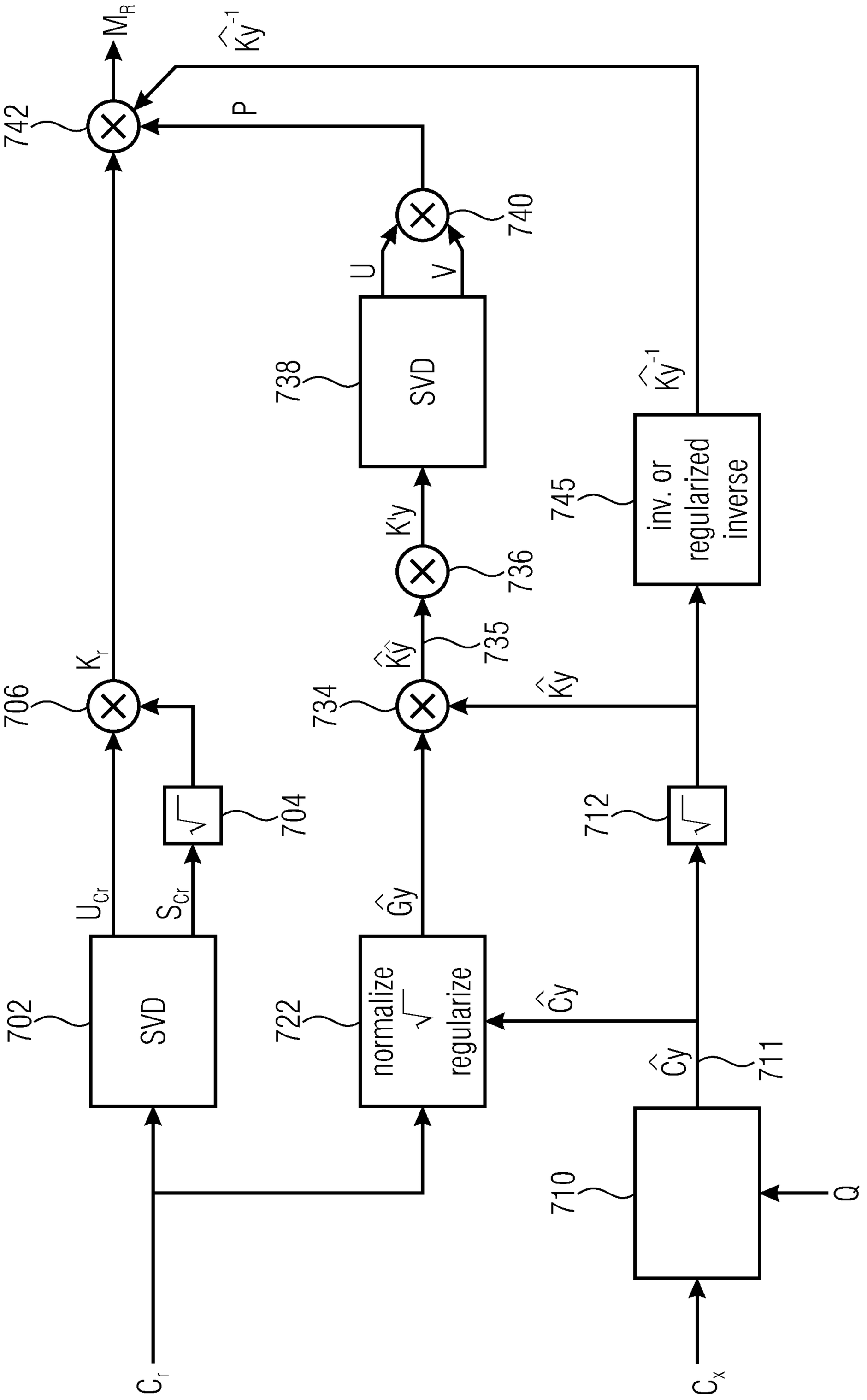
M_R
$\widehat{Ky}^{-1}$
742
P
740
U
V
738
SVD
K'y
736
$\widehat{K\hat{y}}$
735
$\widehat{Ky}$
745
inv. or regularized inverse
$\widehat{Ky}^{-1}$
K_r
706
U_{Cr}
S_{Cr}
704
$\widehat{Gy}$
734
712
702
SVD
722
normalize
regularize
$\widehat{Cy}$
$\widehat{Cy}$
711
710
Q
C_r
C_x

Fig. 11